June 28, 2022

HUD Project #067-35592

SPECIFICATIONS

PASCO COUNTY HOUSING AUTHORITY
"MAGNOLIA OAKS"
7240 & 7338 Massachusetts Ave.
New Port Richey, Florida

Volume 1: ARCHITECTURAL, STRUCTURAL & MEP_FP

ARCHITECT	OWNER	G.C.	LENDER	BONDING CO.
GOODWYN, MILL & CAWOOD, INC.	PASCO COUNTY HOUSING AUTHORITY		ADROC CAPITAL	
SIGNATURE:	SIGNATURE:	SIGNATURE:	SIGNATURE:	SIGNATURE:
TTILE:	TITLE:	TITLE:	TITLE:	TITLE:
DATE:	DATE:	DATE:	DATE:	DATE:

Goodwyn Mills Cawood, LLC.
201 North Franklin Street, Suite 250
Tampa, FL 33602
813.678.2420

BID SET 08/05/2022

SECTION 000107 - SEALS PAGE

PROJECT TEAM INDEX

Owner
Pasco County Housing Authority
13931 7th Street
Dade City, Florida 33525
352.567.0848
Terri Staubs – Executive Director
tstaubs@pascocountyhousing.org
Jeff Sklet – Deputy Director
jsklet@pascocountyhousing.org
Shelly Johnson – General Counsel
shelly@smjlaw.net

Architect
Goodwyn Mills Cawood
201 N. Franklin Street
Suite 250
Tampa FL 33602
813.678.2420
Mickey Jacob, FAIA – Project Principal
mickey.jacob@gmcnetwork.com
Arsenio Guillermo, Assoc. AIA – Project Manager
Arsenio.guillermo@gmcnetwork.com

Associate Architect
Jerel McCants Architects
1210 East Columbus Drive
Tampa, FL 33605
813.812.9120
Jerel McCants, AIA – Associate Architect (FHA, ADA Consultant)
jerel@jmccants.com

Structural Engineer
Structures One
Post Office Box 97
Odessa, FL 33556
813.549.5128
Dan Engebretson, PE – Structural Engineer
dengebretson@structuresone.net

Mechanical, Electrical, Plumbing and Fire Protection Engineer
Emerald Engineering
9942 Currie Davis Dr
STE H
Tampa, FL 33619
813.995.0300
Mike Costello, PE – Mechanical/Plumbing Engineer
m.costello@emeraldmep.com
Adam Powell, PE – Electrical Engineer
a.powell@emeraldmep.com

Landscape Architect
Sturch Design Group
11411 Cypress Park Street
Tampa, FL 3362
813.610.4525
Tom Sturch – Landscape Architect
sturchdesigngroup@gmail.com

Specifications
Stephen T. Ryan
4810 Country Hills Drive
Tampa, FL 33624
813.968.3940
Stephen T. Ryan, RA - Specifications Consultant
ryanspecpro@gmail.com

Cost Estimator
Diaz Fritz Group
13075 Telecom Parkway N.
Temple Terrace, FL 33637
813.254.0072
Chris Hoard – Lead Principal
choard@diazfritz.com
Wayne Ismark – Lead Estimator
wismark@diazfritz.com

Gopher Tortoise Consultant
ESA
5404 Cypress Center Drive,
Suite 125
Tampa, FL 33609
813.207.7200
Douglas Skurski, MW, PWS - Southeast Biological Resources Director
dskurski@esassoc.com

END OF SECTION 000107

DIVISION 00 - PROCUREMENT AND CONTRACTING REQUIREMENTS

DIVISION 01 - GENERAL REQUIREMENTS

DIVISION 03 - CONCRETE

DIVISION 04 - MASONRY

DIVISION 06 - WOOD AND PLASTICS

DIVISION 07 - THERMAL AND MOISTURE PROTECTION

DIVISION 23 - HEATING, VENTILATING AND AIR CONDITIIONING (HVAC)

DIVISION 26 - ELECTRICAL

DIVISION 28 - FIRE ALARM

DIVISION 31 - EARTHWORK

APPENDIX

END OF SECTION 000110

SECTION 003132 - GEOTECHNICAL DATA

1.1 GEOTECHNICAL DATA

A. This Document with its referenced attachments is part of the Procurement and Contracting Requirements for Project. They provide Owner's information for Bidders' convenience and are intended to supplement rather than serve in lieu of Bidders' own investigations. They are made available for Bidders' convenience and information. This Document and its attachments are not part of the Contract Documents.

B. Because subsurface conditions indicated by the soil borings are a sampling in relation to the entire construction area, and for other reasons, the Owner, the Architect, the Architect's consultants, and the firm reporting the subsurface conditions do not warranty the conditions below the depths of the borings or that the strata logged from the borings are necessarily typical of the entire site. Any party using the information described in the soil borings and geotechnical report shall accept full responsibility for its use.

C. Soil-boring data for Project is included with the geotechnical investigation report referenced in this Section.

D. A geotechnical investigation report for Project, titled “Geotechnical Engineering Services Report, Pasco County Housing Authority, Pasco County, Florida, Tierra Project No. 6511-20-174” prepared by Tierra, 7351 Temple Terrace Highway, Tampa, Florida 33637, dated August 21, 2020 (Revised September 18, 2020 is attached to the end of this Section.

1. The opinions expressed in this report are those of a geotechnical engineer and represent interpretations of subsoil conditions, tests, and results of analyses conducted by a geotechnical engineer. Owner is not responsible for interpretations or conclusions drawn from the data.
2. Any party using information described in the geotechnical report shall make additional test borings and conduct other exploratory operations that may be required to determine the character of subsurface materials that may be encountered.

PART 2 - PRODUCTS (Not Used)

PART 3 - EXECUTION (Not Used)

END OF DOCUMENT 003132

TIERRA

Date: June 20, 2022

To: Owner or Architectural Firm

Subject: **GEOTECHNICAL CERTIFICATION**

Name of Apartments:	Magnolia Oaks – Pasco County Housing Authority
HUD Project No:	067-35592
Street address of project:	7240 Massachusetts Avenue
City, state, and zip:	New Port Richey, FL 34653

I *Kevin Scott, P.E.* certify that I have prepared the Geotechnical report for subject project identified below as:

Geotechnical Report Number 6511-20-174 dated September 18, 2020 prepared by Tierra, Inc.

The soils encountered in the borings should be capable of supporting the proposed structures on shallow foundations after proper subgrade preparation, including removal and replacement of deleterious material and surface compaction. Shallow foundations may be designed for a net maximum allowable bearing pressure of approximately 2,000 pounds per square foot (psf). All footings should be embedded so that the bottoms of the foundations are a minimum of 18 inches below adjacent compacted grades on all sides. Strip or wall footings should be a minimum of 18 inches wide and pad or column footings should be a minimum of 30 inches wide.

Describe Geotech approved foundation types: i.e. Slab-on-grade, Post Tension; Conventionally Reinforced; Pier & Beam, Steel pilings, etc.

Shallow foundations and slab-on grade

Describe foundation sub-grade preparation requirements: depth, moisture treatment, type of fill, design parameters to include plasticity index, potential vertical rise limits etc.

The bottom of the foundation excavations should be compacted to a minimum density of 95% of the Modified Proctor maximum dry density for a minimum depth of one (1) foot below the bottom of the footing depth, as determined by field density compaction tests.

Tierra, Inc. has provided a total of twenty-six (26) soil borings in this investigation. This provides a minimum of one (1) soil boring for each foundation proposed.

Our Geotechnical Report for the above referenced project was completed in accordance with Chapter 18 of the current International Building Code (IBC) and in compliance with HUD/MAP Guide issued December 18, 2020, Revised March 19, 2021.

KEVIN HUNT SCOTT
LICENSE
No 65514
6/20/2022
STATE OF FLORIDA
PROFESSIONAL ENGINEER

Kevin H. Scott, P.E.
Senior Geotechnical Engineer

7351 Temple Terrace Highway • Tampa, Florida 33637
Phone (813)989-1354 • Fax (813)989-1355

BID SET 08/05/2022

TIERRA

August 21, 2020 (Revised September 18, 2020)

Goodwyn Mills Cawood
2701 1st Avenue South, Suite 100
Birmingham, AL 35233

Attn: Mr. Kevin Wales, P.E.

RE: Geotechnical Engineering Services Report
Pasco County Housing Authority
Pasco County, Florida
Tierra Project No. 6511-20-174

Mr. Wales:

Tierra, Inc. has completed geotechnical engineering services for the above referenced project. The results of our field exploration program and subsequent geotechnical recommendations are presented in this report.

Should there be any questions regarding this report, please do not hesitate to contact our office at (813) 989-1354. Tierra would be pleased to continue providing geotechnical services throughout the implementation of the project. We look forward to working with you on this and future projects.

Respectfully Submitted,

TIERRA, INC.

KEVIN HUNT SCOTT
LICENSE
No 65514
STATE OF
FLORIDA
PROFESSIONAL ENGINEER

This item has been digitally signed and sealed by Kevin H. Scott on the date adjacent to the seal.

Printed copies of this document are not considered signed and sealed and the signature must be verified on any electronic documents.

Susan E. Fries

Susan E. Fries, E.I.
Geotechnical Engineer Intern

Kevin H. Scott, P.E.
Senior Geotechnical Engineer
Florida License No. 65514

7351 Temple Terrace Highway • Tampa, FL 33637
Phone (813) 989-1354 • Fax (813) 989-1355
Florida Certificate No. 6486

TABLE OF CONTENTS

PROJECT DESCRIPTION

Project Information

The site is located at 7240 and 7338 Massachusetts Avenue in New Port Richey, Florida.

Based on the provided information, we understand the sites are being considered for the construction of multi-family units consisting of 1 to 3 bedroom units within 17 townhome style structures. Also included with the project is a clubhouse structure and swimming pool.

Structural and grading information were not available at the time of this report. Based on our experience with similar projects, we anticipate that maximum column and wall loads will not exceed 50 kips and 5 kips per linear foot, respectively. In addition, we anticipate that proposed finished grades will be within 2 feet of the existing site grades. If the loading conditions or finished grade information for the proposed development exceed what is presented in this report, then Tierra should be given the opportunity to review the final design information and amend the recommendations herein, if necessary.

Scope of Services

The objective of our study was to evaluate existing soils with respect to the proposed residential construction. Tierra performed a soils exploration program consisting of borings at the site to obtain information on the subsurface conditions present and provide geotechnical recommendations for the proposed residential construction.

In order to meet the preceding objectives, we provided the following services:

1. Executed a program of subsurface sampling and field testing consisting of borings and subsurface sampling. Performed a total of twenty-six (26) Standard Penetration Test (SPT) borings to a depth of 20 feet below the existing ground surface.

2. Visually classified the samples in the laboratory using the Unified Soil Classification System (USCS) iIdentified soil conditions at each boring location.

3. Collected groundwater level measurements at the boring locations.

4. Prepared this engineering report which summarizes the course of study pursued, the field and laboratory data generated, the subsurface conditions encountered and our geotechnical recommendations including site preparation and geotechnical foundation design considerations based on the results of the borings.

The scope of our services did not include an environmental assessment for determining the presence or absence of wetlands or hazardous or toxic materials in the soil, bedrock, groundwater, or air, on or below or around this site. In addition, the scope of our services did not include determination of the potential for sinkhole activity. Any statements in this report or on the boring logs regarding odors, colors, unusual or suspicious items or conditions are strictly for the information of our client.

SITE AND SUBSURFACE CONDITIONS

Subsurface Exploration

The subsurface conditions at the project site were explored with twenty-six (26) Standard Penetration Test (SPT) borings performed to a depth of 20 feet below existing grades. The SPT borings were performed within the anticipated footprint of the proposed building pads in areas accessible to our drilling equipment. The approximate boring locations are shown on the **Boring Location Plan** sheet in the **Appendix**.

The SPT borings were performed with the use of a drill rig equipped with an automatic hammer using Bentonite mud-rotary drilling procedures. The soil sampling was performed in general accordance with the American Society for Testing and Materials (ASTM) Test Designation D-1586. The SPT borings were advanced by hand auger from the ground surface to a depth of 6 feet to verify utility clearances. SPT resistance N-values were then taken continuously to a depth of 10 feet and on intervals of 5 feet thereafter to the boring termination depth. Representative portions of the soil samples were sealed in glass jars, labeled and transferred to our laboratory for classification and analyses.

Subsurface Conditions

The borings generally encountered sandy soils underlain by clayey sand to clay underlain by calcareous clay to weathered limestone to the boring termination depths. Specific information about the subsurface conditions and materials encountered at each test location is presented on the **Soil Profiles** sheets in the **Appendix**. The soil strata encountered in the borings performed at the project site are summarized in the following table:

Stratum Number	Soil Description	Unified Soil Classification System (USCS) Symbol
1	Pale Brown to Brown to Orange-Brown Sand to Sand with Silt	SP/SP-SM
2	Brown Sand to Silty Sand with Clay Nodules – Fill	SP/SP-SM/SM
3	Gray to Brown to Orange-Brown Clayey Sand	SC
4	Gray Clay	CL/CH
5	Calcareous Clay with Weathered Limestone Fragments	---(1)
(1) USCS does not include nomenclature for Limestone		

Soil stratification was determined based on a review of the recovered samples, laboratory test results and interpretation of field borings logs. Stratification lines represent approximate boundaries between soil layers of different engineering properties; however, actual transitions between layers may be gradual. In some cases, small variations in properties that were not considered pertinent to our geotechnical evaluation may have been abbreviated or omitted for clarity. The soil profiles represent the conditions at the particular boring location and variations did occur among the borings.

Groundwater Information

The groundwater table levels at the project site were measured at depths ranging from approximately 5½ to 6 feet below the existing ground surface. It should be noted that groundwater levels tend to fluctuate during periods of prolonged drought and extended rainfall and may be affected by man-made influences. In addition, a seasonal effect will also occur in which higher groundwater levels are normally recorded in rainy seasons.

EVALUATION AND RECOMMENDATIONS

General

The geotechnical engineering evaluations and recommendations are provided herein for the proposed residential development. The recommendations are based upon the subsurface conditions encountered, the design parameters anticipated for the proposed development and our geotechnical engineering evaluations. The following report sections present our foundation recommendations and general construction considerations.

On Site Soil Suitability

The soil types encountered in the borings performed for this study appear suitable for the proposed development. If unsuitable materials are encountered during site preparation activities, the unsuitable materials should be removed and the proposed footing/finish elevation may be re-established by backfilling after the undesirable material has been removed. This backfilling may be done with a well-compacted, suitable fill such as clean sand (i.e. less than 12 percent passing the no. 200 sieve), gravel, or FDOT No. 57 or FDOT No. 67 stone.

In general, the soils of Strata 1 and 2 (SP/SP-SM/SM) may be moved and used for grading purposes, site leveling, general engineering fill, structural fill and backfill in other areas, provided the fill is free of organic materials, clay, debris or any other material deemed unsuitable for construction and evaluated against engineering fill requirements.

Site Preparation

Prior to construction, the location of any existing underground utilities within the construction area should be established. Material suitable for re-use may be stockpiled; however, any material stockpiled for re-use shall be tested for conformance to material specifications as indicated in the following sections of this report. Provisions should then be made to relocate any interfering utility lines within the construction area to appropriate locations and backfilling the excavation with compacted structural fill. In this regard, it should be noted that if abandoned underground pipes are not properly removed or plugged, they might serve as conduits for subsurface erosion, which subsequently may result in excessive settlement.

The site should be cleared of surface vegetation, building remnants and any apparent deleterious materials. As a minimum, it is recommended that the clearing operations extend to the depth needed to remove material considered deleterious at least 5 feet beyond the proposed development area. Deleterious materials to be removed may include roots, stumps, and organic soils. Fill placement and subgrade preparation recommendations are presented in the “Construction Considerations” section of this report.

Foundation Recommendations

Based on our evaluation and analyses, the soils encountered in the borings should be capable of supporting the proposed structures on shallow foundations after proper subgrade preparation, including removal and replacement of deleterious material and surface compaction. Based on the anticipated construction, field results indicate shallow foundations may be designed for a net maximum allowable bearing pressure of approximately 2,000 pounds per square foot (psf).

All footings should be embedded so that the bottoms of the foundations are a minimum of 18 inches below adjacent compacted grades on all sides. Strip or wall footings should be a minimum of 18 inches wide and pad or column footings should be a minimum of 30 inches wide. The minimum footing sizes should be used regardless of whether or not the foundation loads and allowable bearing pressures dictate a smaller size. These minimum footing sizes tend to provide adequate bearing area to develop bearing capacity and account for minor variations in the bearing materials. All footings should be constructed in a dry fashion. All footing excavations should be covered during rain events. Uncovered excavations may become oversaturated and difficult to compact during rain events. Surface run-off water should be drained away from the excavations and not allowed to pond. It is important that the structural elements be centered on the footings such that the load is transferred evenly unless the footings are proportioned for eccentric loads.

Settlement

The settlement of shallow foundations supported on the compacted sand fill and native sandy soils should occur rapidly after loading. Thus, the expected settlement should occur during construction as dead loads are imposed. Provided the recommended site preparation operations are properly performed and the recommendations previously stated are utilized, the total settlement of wall and isolated column footings should not exceed approximately ¾ inch. Differential settlement is estimated to be on the order of 1/480 (¾-inch over 30 feet). Differential settlement of this magnitude is usually considered tolerable for the anticipated construction; however, the tolerance of the proposed structure to the predicted total and differential settlement should be confirmed by the structural engineer. If final loading conditions differ from the loads assumed above, Tierra should be given the opportunity to review and amend our recommendations, if necessary.

Floor Slab

The floor slab may be safely supported as a slab-on-grade provided any unsuitable materials are removed and replaced with controlled structural fill. It is also recommended that the floor slab bearing soils be covered by a lapped polyethylene sheeting in order to reduce the potential for floor dampness which can affect the performance of various flooring materials (if any are used). This membrane should consist of a minimum six (6) mil single layer of non-corroding, non-deteriorating sheeting material placed to reduce seams and to cover all of the soil below the building floor. This membrane should be cut in a cross shape for pipes or other penetrations; the membrane should extend to within one-half inch of all pipes or other penetrations. All seams of the membrane should be lapped at least 12 inches. Punctures or tears in the membrane should be repaired with the same or compatible material.

CONSTRUCTION CONSIDERATIONS

General

It is recommended that a qualified and certified material engineering firm be retained to provide observation and testing of construction activities involved in the foundation earthwork, and related activities of this project. Tierra cannot accept any responsibility for any conditions, which deviate from those described in this report, if not engaged to provide construction observation and testing for this project.

Fill Placement and Subgrade Preparation

The following are our recommendations for overall site preparation and mechanical densification work for the construction of the proposed residential structure based on the anticipated construction and our boring results. These recommendations should be used as a guideline for the project general specifications prepared by the design engineer.

1. The site should be cleared; this primarily includes removing any deleterious materials currently on the site such as roots, organics, tree stumps or other buried or surface debris. It is recommended that any undesirable material be removed to the satisfaction of Tierra prior to beginning construction at the site. Resulting excavations should be backfilled with compacted structural fill. As a minimum, it is recommended that the clearing operations extend at least five (5) feet beyond the development perimeters.

2. Following the clearing operations, the development area should be proofrolled. The proofrolling may consist of compaction with a large vibratory roller or a fully loaded 2 cubic yard front-end loader or equivalent (i.e. through non-vibratory means). **Vibratory rollers should not be used within 50 feet of existing structures.**

3. Careful observations should be made during compaction to help identify any areas of soft yielding soils that may require over excavation and replacement. It is recommended that within the building area, the natural ground, to a minimum depth of one (1) foot below stripped grade, be compacted to a dry density of at least 95% of the Modified Proctor maximum dry density.

4. Following satisfactory completion of the initial compaction and proofrolling, the structure areas may be brought up to finished subgrade levels, if needed, using structural fill. Imported fill should consist of fine sand with less than 12% passing the No. 200 sieve, free of rubble, organics, clay, debris and other unsuitable material. Fill should be tested and approved prior to acquisition. Approved sand fill should be placed in loose lifts not exceeding 12 inches in thickness and should be compacted to a minimum density of 95% of the Modified Proctor maximum dry density. Density tests to confirm compaction should be performed in each fill lift before the next lift is placed.

5. Prior to beginning compaction, soil moisture contents may need to be controlled in order to facilitate proper compaction. If additional moisture is necessary to achieve compaction objectives, then water should be applied in such a way that it will not cause erosion or removal of the subgrade soils. Moisture content within the percentage range needed to achieve compaction is recommended prior to compaction of the natural ground and fill.

6. After compaction, the building foundation excavations can begin. Foundation excavations should be observed by the geotechnical engineer or a representative to explore the extent of any loose, soft, or otherwise undesirable materials. If the foundation excavations appear suitable as load bearing materials, the bottom of the foundation excavations should be compacted to a minimum density of 95% of the Modified Proctor maximum dry density for a minimum depth of one (1) foot below the bottom of the footing depth, as determined by field density compaction tests.

7. If pockets of soft or unsuitable materials are encountered in the footing excavations, the unsuitable materials should be removed and the proposed footing elevation may be re-established by backfilling after the undesirable materials have been removed. This backfilling may be done with a well-compacted, suitable fill such as clean sand, gravel, or crushed FDOT No. 57 or FDOT No. 67 stone. Sand backfill should be compacted to a minimum density of 95% of the Modified Proctor maximum dry density.

8. Immediately prior to reinforcing steel placement, it is suggested that the bearing surfaces of all footing and floor slab areas be compacted using hand operated mechanical tampers. In this manner, any localized areas, which have been loosened by excavation operations, should be adequately recompacted.

9. Backfill soils placed adjacent to footings or walls should be carefully compacted with a light rubber-tired roller or vibratory plate compactor to avoid damaging the footings or walls. Approved sand fills to provide foundation embedment constraint should be placed in loose lifts not exceeding 6 inches and should be compacted to a minimum density of 95% of the Modified Proctor maximum dry density.

Tierra should be retained to provide on-site observation of earthwork activities. Density tests should be performed in the top one (1) foot of compacted existing ground, each fill lift, and the bottom of foundation excavations. It is important that Tierra be retained to observe that the subsurface conditions are as we have discussed herein, and that foundation construction, ground modification and fill placement is in accordance with our recommendations.

Drainage and Groundwater Concerns

We recommend that the Contractor determine the actual groundwater levels at the time of construction to determine potential groundwater impacts that may occur during construction.

Water should not be allowed to collect in the foundation excavations, on the floor slab areas, or on prepared subgrades of the construction either during or after construction. Undercut or excavated areas should be sloped toward one corner to facilitate removal of any collected rainwater, groundwater, or surface runoff. Positive site drainage should be provided to reduce infiltration of surface water around the perimeter of the buildings and beneath the floor slabs. The grades should be sloped away from the building and surface drainage should be collected and discharged such that water is not permitted to infiltrate the backfill and floor slab areas of the buildings.

Structural Fill

All materials used for structural fill or backfill should be evaluated and, if necessary, tested by Tierra prior to placement to determine if they are suitable for the intended use. Suitable fill materials should consist of fine to medium sand with less than 12% passing the No. 200 sieve, free of rubble, organics, clay, debris and other unsuitable material.

Excavations

Temporary side slopes and excavations should comply with the Occupational Safety and Health Administration's (OSHA) trench safety standards, 29 C.F.R., s. 1926.650, Subpart P, all subsequent corrections or updates of OSHA's referenced standard adopted by the Department of Labor and Employment Security and Florida's Trench Safety Act, Section 553.62, Florida Statutes. Excavated materials should not be stockpiled at the top of the slope within a horizontal distance equal to the excavation depth.

We are providing this information solely as a service to our client. Tierra does not assume responsibility for construction site safety or the contractor's or other party's compliance with current local, state, and federal safety or other regulations.

REPORT LIMITATIONS

The analyses, conclusions and recommendations contained in this report are opinions based on the site conditions and project layout described herein and further assumes that the conditions observed in the exploratory borings are representative of the subsurface conditions throughout the site, i.e., the subsurface conditions elsewhere on the site are the same as those disclosed by the borings. If, during construction, subsurface conditions different from those encountered in the exploratory borings are observed or appear to be present beneath excavations, we should be advised at once so that we can review these conditions and reconsider our recommendations where necessary.

If there is a substantial lapse in time between the submittal of this report and the start of work at the site, or if conditions or project layout are changed due to natural causes or construction operations at or adjacent to the site, we recommend that this report be reviewed to determine the applicability of conclusions and recommendations considering the changed conditions and time lapse.

This report was prepared for the exclusive use of Goodwyn Mills Cawood and their client for evaluating the design of the project as it relates to the geotechnical aspects discussed herein. It should be made available to prospective contractors for information on factual data only and not as a warranty of subsurface conditions included in this report. Unanticipated soil conditions may require that additional expense be made to attain a properly constructed project. Therefore, some contingency fund is recommended to accommodate such potential extra costs.

APPENDIX

Boring Location Plan sheet
Soil Profiles sheets

BORING LOCATION PLAN

0 100'

PLAN SCALE

LEGEND

APPROXIMATE LOCATION OF SPT BORING

BID SET 08/05/2022

DRAWN BY: SW	APPROVED BY: KHS	ENGINEER OF RECORD: KEVIN H. SCOTT, P.E. FLORIDA LICENSE NO.: 65514	TIERRA 7351 Temple Terrace Highway Tampa, Florida 33637 Phone: 813-989-1354 Fax: 813-989-1355 FL Cert. No.: 6486	SCALE: NOTED	PROJECT NUMBER: 6511-20-174	GEOTECHNICAL ENGINEERING SERVICES PASCO COUNTY HOUSING AUTHORITY PASCO COUNTY, FLORIDA	SHEET 1
CHECKED BY: SF	DATE: SEPT 2020						

SOIL PROFILES

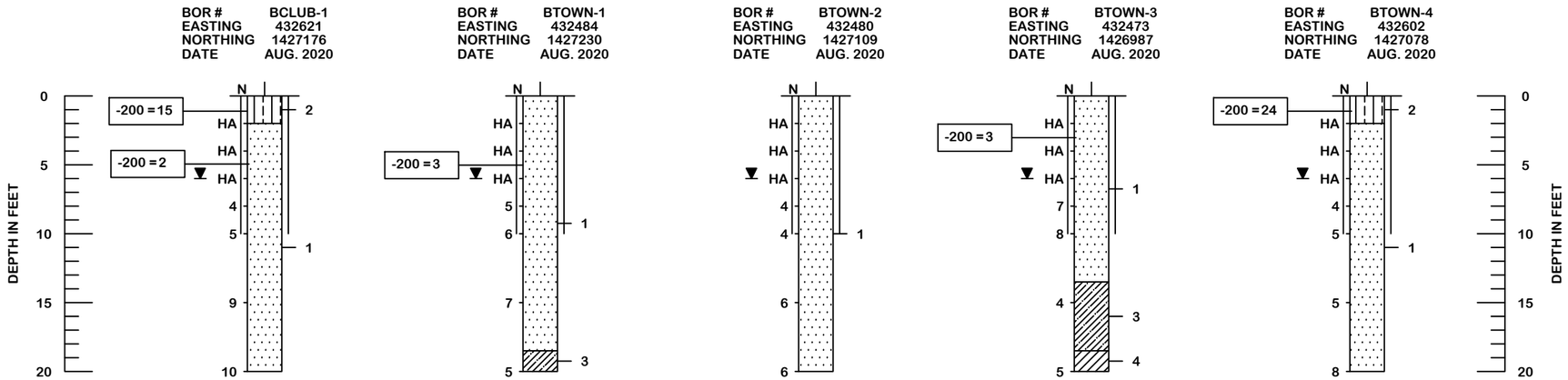

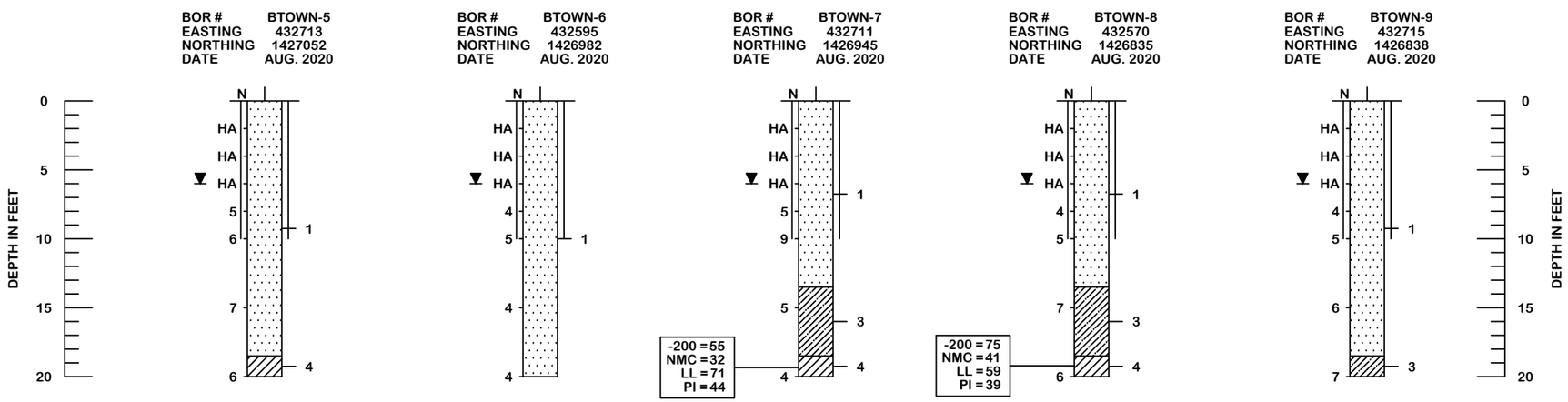

LEGEND

1	PALE BROWN TO BROWN TO ORANGE-BROWN SAND TO SAND WITH SILT (SP/SP-SM)
2	BROWN SAND TO SILTY SAND WITH CLAY NODULES - FILL (SP/SP-SM/SM)
3	GRAY TO BROWN TO ORANGE-BROWN CLAYEY SAND (SC)
4	GRAY CLAY (CL/CH)
5	CALCAREOUS CLAY WITH WEATHERED LIMESTONE FRAGMENTS
▼	GROUNDWATER LEVEL ENCOUNTERED DURING INVESTIGATION
N	SPT N-VALUE IN BLOWS/FOOT FOR 12 INCHES OF PENETRATION (UNLESS OTHERWISE NOTED)
SP	UNIFIED SOIL CLASSIFICATION SYSTEM (ASTM D 2488) GROUP SYMBOL AS DETERMINED BY VISUAL REVIEW AND LABORATORY TESTING ON SELECTED SAMPLES FOR CONFIRMATION OF VISUAL REVIEW.
HA	HAND AUGERED TO VERIFY UTILITY CLEARANCES
| |	CASING
EASTING	EASTING COORDINATE REFERENCED TO THE FLORIDA STATE PLANE COORDINATE SYSTEM, FLORIDA WEST ZONE, N.A.D. 83 DETERMINED USING HAND-HELD GARMIN ETREX GPS EQUIPMENT WITH A REPORTED ACCURACY OF +/- 10 FEET
NORTHING	NORTHING COORDINATE REFERENCED TO THE FLORIDA STATE PLANE COORDINATE SYSTEM, FLORIDA WEST ZONE, N.A.D. 83 DETERMINED USING HAND-HELD GARMIN ETREX GPS EQUIPMENT WITH A REPORTED ACCURACY OF +/- 10 FEET
-200	PERCENT PASSING #200 SIEVE
NMC	NATURAL MOISTURE CONTENT (%)
LL	LIQUID LIMIT (%)
PI	PLASTICITY INDEX (%)

AUTOMATIC HAMMER	
GRANULAR MATERIALS-RELATIVE DENSITY	SPT (BLOWS/FT.)
VERY LOOSE	LESS THAN 3
LOOSE	3 TO 8
MEDIUM	8 TO 24
DENSE	24 TO 40
VERY DENSE	GREATER THAN 40
SILTS AND CLAYS CONSISTENCY	SPT (BLOWS/FT.)
VERY SOFT	LESS THAN 1
SOFT	1 TO 3
FIRM	3 TO 6
STIFF	6 TO 12
VERY STIFF	12 TO 24
HARD	GREATER THAN 24

BID SET 08/05/2022

DRAWN BY: SW
CHECKED BY: SF
APPROVED BY: KHS
DATE: SEPT 2020
ENGINEER OF RECORD: KEVIN H. SCOTT, P.E.
FLORIDA LICENSE NO.: 65514

TIERRA
7351 Temple Terrace Highway
Tampa, Florida 33637
Phone: 813-989-1354 Fax: 813-989-1355
FL Cert. No.: 6486

SCALE: NOTED
PROJECT NUMBER: 6511-20-174

GEOTECHNICAL ENGINEERING SERVICES
PASCO COUNTY HOUSING AUTHORITY
PASCO COUNTY, FLORIDA

SHEET 2

SOIL PROFILES

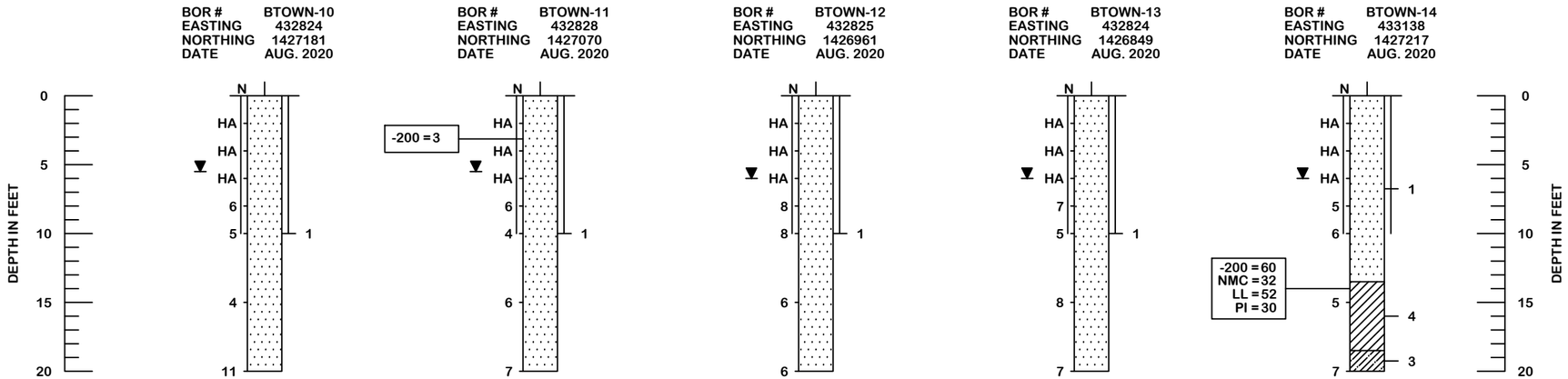

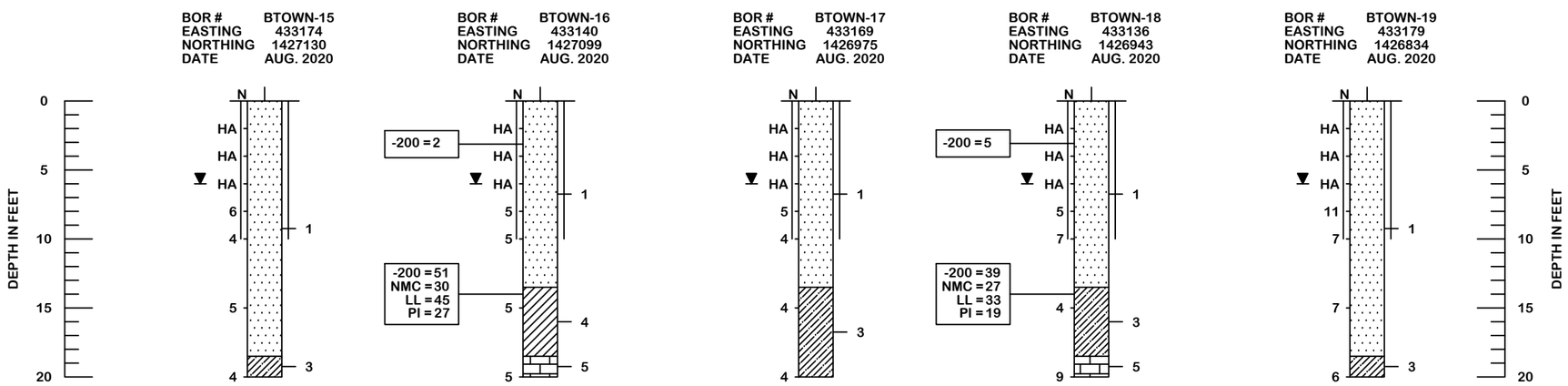

LEGEND

1 PALE BROWN TO BROWN TO ORANGE-BROWN SAND TO SAND WITH SILT (SP/SP-SM)

2 BROWN SAND TO SILTY SAND WITH CLAY NODULES - FILL (SP/SP-SM/SM)

3 GRAY TO BROWN TO ORANGE-BROWN CLAYEY SAND (SC)

4 GRAY CLAY (CL/CH)

5 CALCAREOUS CLAY WITH WEATHERED LIMESTONE FRAGMENTS

▼ GROUNDWATER LEVEL ENCOUNTERED DURING INVESTIGATION

N SPT N-VALUE IN BLOWS/FOOT FOR 12 INCHES OF PENETRATION (UNLESS OTHERWISE NOTED)

SP UNIFIED SOIL CLASSIFICATION SYSTEM (ASTM D 2488) GROUP SYMBOL AS DETERMINED BY VISUAL REVIEW AND LABORATORY TESTING ON SELECTED SAMPLES FOR CONFIRMATION OF VISUAL REVIEW.

HA HAND AUGERED TO VERIFY UTILITY CLEARANCES

CASING

EASTING EASTING COORDINATE REFERENCED TO THE FLORIDA STATE PLANE COORDINATE SYSTEM, FLORIDA WEST ZONE, N.A.D. 83 DETERMINED USING HAND-HELD GARMIN ETREX GPS EQUIPMENT WITH A REPORTED ACCURACY OF +/- 10 FEET

NORTHING NORTHING COORDINATE REFERENCED TO THE FLORIDA STATE PLANE COORDINATE SYSTEM, FLORIDA WEST ZONE, N.A.D. 83 DETERMINED USING HAND-HELD GARMIN ETREX GPS EQUIPMENT WITH A REPORTED ACCURACY OF +/- 10 FEET

-200 PERCENT PASSING #200 SIEVE

NMC NATURAL MOISTURE CONTENT (%)

LL LIQUID LIMIT (%)

PI PLASTICITY INDEX (%)

AUTOMATIC HAMMER	
GRANULAR MATERIALS-RELATIVE DENSITY	SPT (BLOWS/FT.)
VERY LOOSE	LESS THAN 3
LOOSE	3 TO 8
MEDIUM	8 TO 24
DENSE	24 TO 40
VERY DENSE	GREATER THAN 40
SILTS AND CLAYS CONSISTENCY	SPT (BLOWS/FT.)
VERY SOFT	LESS THAN 1
SOFT	1 TO 3
FIRM	3 TO 6
STIFF	6 TO 12
VERY STIFF	12 TO 24
HARD	GREATER THAN 24

BID SET 08/05/2022

DRAWN BY: SW
CHECKED BY: SF
APPROVED BY: KHS
DATE: SEPT 2020
ENGINEER OF RECORD: KEVIN H. SCOTT, P.E.
FLORIDA LICENSE NO.: 65514

TIERRA
7351 Temple Terrace Highway
Tampa, Florida 33637
Phone: 813-989-1354 Fax: 813-989-1355
FL Cert. No.: 6486

SCALE: NOTED
PROJECT NUMBER: 6511-20-174

GEOTECHNICAL ENGINEERING SERVICES
PASCO COUNTY HOUSING AUTHORITY
PASCO COUNTY, FLORIDA

SHEET 3

SOIL PROFILES

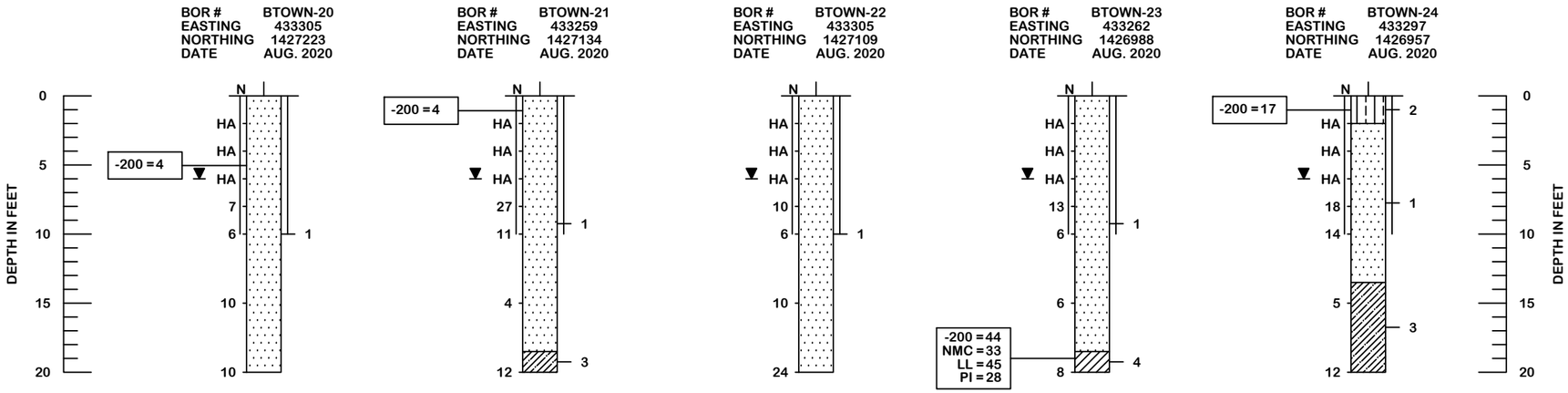

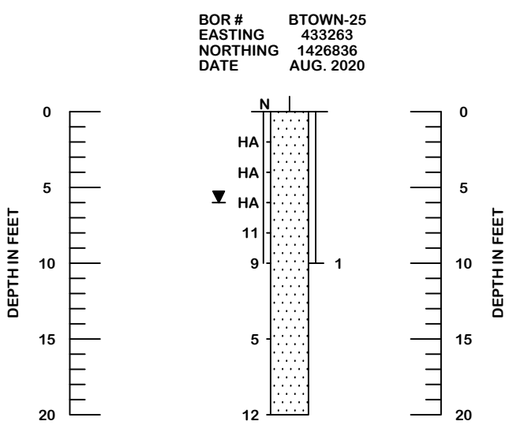

LEGEND

1	PALE BROWN TO BROWN TO ORANGE-BROWN SAND TO SAND WITH SILT (SP/SP-SM)
2	BROWN SAND TO SILTY SAND WITH CLAY NODULES - FILL (SP/SP-SM/SM)
3	GRAY TO BROWN TO ORANGE-BROWN CLAYEY SAND (SC)
4	GRAY CLAY (CL/CH)
5	CALCAREOUS CLAY WITH WEATHERED LIMESTONE FRAGMENTS
▼	GROUNDWATER LEVEL ENCOUNTERED DURING INVESTIGATION
N	SPT N-VALUE IN BLOWS/FOOT FOR 12 INCHES OF PENETRATION (UNLESS OTHERWISE NOTED)
SP	UNIFIED SOIL CLASSIFICATION SYSTEM (ASTM D 2488) GROUP SYMBOL AS DETERMINED BY VISUAL REVIEW AND LABORATORY TESTING ON SELECTED SAMPLES FOR CONFIRMATION OF VISUAL REVIEW.
HA	HAND AUGERED TO VERIFY UTILITY CLEARANCES
| |	CASING
EASTING	EASTING COORDINATE REFERENCED TO THE FLORIDA STATE PLANE COORDINATE SYSTEM, FLORIDA WEST ZONE, N.A.D. 83 DETERMINED USING HAND-HELD GARMIN ETREX GPS EQUIPMENT WITH A REPORTED ACCURACY OF +/- 10 FEET
NORTHING	NORTHING COORDINATE REFERENCED TO THE FLORIDA STATE PLANE COORDINATE SYSTEM, FLORIDA WEST ZONE, N.A.D. 83 DETERMINED USING HAND-HELD GARMIN ETREX GPS EQUIPMENT WITH A REPORTED ACCURACY OF +/- 10 FEET
-200	PERCENT PASSING #200 SIEVE
NMC	NATURAL MOISTURE CONTENT (%)
LL	LIQUID LIMIT (%)
PI	PLASTICITY INDEX (%)

AUTOMATIC HAMMER	
GRANULAR MATERIALS-RELATIVE DENSITY	SPT (BLOWS/FT.)
VERY LOOSE	LESS THAN 3
LOOSE	3 TO 8
MEDIUM	8 TO 24
DENSE	24 TO 40
VERY DENSE	GREATER THAN 40
SILTS AND CLAYS CONSISTENCY	SPT (BLOWS/FT.)
VERY SOFT	LESS THAN 1
SOFT	1 TO 3
FIRM	3 TO 6
STIFF	6 TO 12
VERY STIFF	12 TO 24
HARD	GREATER THAN 24

BID SET 08/05/2022

DRAWN BY: SW
CHECKED BY: SF
APPROVED BY: KHS
DATE: SEPT 2020
ENGINEER OF RECORD: KEVIN H. SCOTT, P.E.
FLORIDA LICENSE NO.: 65514

TIERRA
7351 Temple Terrace Highway
Tampa, Florida 33637
Phone: 813-989-1354 Fax: 813-989-1355
FL Cert. No.: 6486

SCALE: NOTED
PROJECT NUMBER: 6511-20-174

GEOTECHNICAL ENGINEERING SERVICES
PASCO COUNTY HOUSING AUTHORITY
PASCO COUNTY, FLORIDA

SHEET 4

SECTION 007200 - GENERAL CONDITIONS

1.1 GENERAL CONDITIONS

A. The following form of the General Conditions shall be used for the Project:

1. AIA Document A201-2017 "General Conditions of the Contract for Construction."

B. AIA Document A201-2017 is attached to the end of this Section.

PART 2 - PRODUCTS (Not Used)

PART 3 - EXECUTION (Not Used)

END OF SECTION 007200

AIA® Document A201® – 2017

General Conditions of the Contract for Construction

for the following PROJECT:
(Name and location or address)

Magnolia Oaks Affordable Housing Project
7240 and 7388 Massachusetts Avenue
New Port Richey, Florida

THE OWNER:
(Name, legal status and address)

Pasco County Housing Authority
13931 7th Street
Dade City, Florida 33525

THE ARCHITECT:
(Name, legal status and address)

Goodwyn Mills Cawood, LLC
201 North Franklin Street, Suite 250
Tampa, Florida 33602

ADDITIONS AND DELETIONS:
The author of this document has added information needed for its completion. The author may also have revised the text of the original AIA standard form. An *Additions and Deletions Report* that notes added information as well as revisions to the standard form text is available from the author and should be reviewed. A vertical line in the left margin of this document indicates where the author has added necessary information and where the author has added to or deleted from the original AIA text.

This document has important legal consequences. Consultation with an attorney is encouraged with respect to its completion or modification.

For guidance in modifying this document to include supplementary conditions, see AIA Document A503™, Guide for Supplementary Conditions.

TABLE OF ARTICLES

Init.
/

14 TERMINATION OR SUSPENSION OF THE CONTRACT

15 CLAIMS AND DISPUTES

INDEX

(Topics and numbers in bold are Section headings.)

ARTICLE 1 GENERAL PROVISIONS

§ 1.1 Basic Definitions

§ 1.1.1 The Contract Documents

The Contract Documents are enumerated in the Agreement between the Owner and Contractor (hereinafter the Agreement) and consist of the Agreement, Conditions of the Contract (General, Supplementary and other Conditions), Drawings, Specifications, Addenda issued prior to execution of the Contract, other documents listed in the Agreement, and Modifications issued after execution of the Contract. A Modification is (1) a written amendment to the Contract signed by both parties, (2) a Change Order, (3) a Construction Change Directive, or (4) a written order for a minor change in the Work issued by the Architect. Unless specifically enumerated in the Agreement, the Contract Documents do not include the advertisement or invitation to bid, Instructions to Bidders, sample forms, other information furnished by the Owner in anticipation of receiving bids or proposals, the Contractor's bid or proposal, or portions of Addenda relating to bidding or proposal requirements.

§ 1.1.2 The Contract

The Contract Documents form the Contract for Construction. The Contract represents the entire and integrated agreement between the parties hereto and supersedes prior negotiations, representations, or agreements, either written or oral. The Contract may be amended or modified only by a Modification. The Contract Documents shall not be construed to create a contractual relationship of any kind (1) between the Contractor and the Architect or the Architect's consultants, (2) between the Owner and a Subcontractor or a Sub-subcontractor, (3) between the Owner and the Architect or the Architect's consultants, or (4) between any persons or entities other than the Owner and the Contractor. The Architect shall, however, be entitled to performance and enforcement of obligations under the Contract intended to facilitate performance of the Architect's duties.

§ 1.1.3 The Work

The term "Work" means the construction and services required by the Contract Documents, whether completed or partially completed, and includes all other labor, materials, equipment, and services provided or to be provided by the Contractor to fulfill the Contractor's obligations. The Work may constitute the whole or a part of the Project.

§ 1.1.4 The Project

The Project is the total construction of which the Work performed under the Contract Documents may be the whole or a part and which may include construction by the Owner and by Separate Contractors.

§ 1.1.5 The Drawings

The Drawings are the graphic and pictorial portions of the Contract Documents showing the design, location and dimensions of the Work, generally including plans, elevations, sections, details, schedules, and diagrams.

§ 1.1.6 The Specifications

The Specifications are that portion of the Contract Documents consisting of the written requirements for materials, equipment, systems, standards and workmanship for the Work, and performance of related services.

§ 1.1.7 Instruments of Service

Instruments of Service are representations, in any medium of expression now known or later developed, of the tangible and intangible creative work performed by the Architect and the Architect's consultants under their respective professional services agreements. Instruments of Service may include, without limitation, studies, surveys, models, sketches, drawings, specifications, and other similar materials.

§ 1.1.8 Initial Decision Maker

The Initial Decision Maker is the person identified in the Agreement to render initial decisions on Claims in accordance with Section 15.2. The Initial Decision Maker shall not show partiality to the Owner or Contractor and shall not be liable for results of interpretations or decisions rendered in good faith.

§ 1.2 Correlation and Intent of the Contract Documents

§ 1.2.1 The intent of the Contract Documents is to include all items necessary for the proper execution and completion of the Work by the Contractor. The Contract Documents are complementary, and what is required by one shall be as binding as if required by all; performance by the Contractor shall be required only to the extent consistent with the Contract Documents and reasonably inferable from them as being necessary to produce the indicated results.

§ 1.2.1.1 The invalidity of any provision of the Contract Documents shall not invalidate the Contract or its remaining provisions. If it is determined that any provision of the Contract Documents violates any law, or is otherwise invalid or unenforceable, then that provision shall be revised to the extent necessary to make that provision legal and enforceable. In such case the Contract Documents shall be construed, to the fullest extent permitted by law, to give effect to the parties' intentions and purposes in executing the Contract.

§ 1.2.2 Organization of the Specifications into divisions, sections and articles, and arrangement of Drawings shall not control the Contractor in dividing the Work among Subcontractors or in establishing the extent of Work to be performed by any trade.

§ 1.2.3 Unless otherwise stated in the Contract Documents, words that have well-known technical or construction industry meanings are used in the Contract Documents in accordance with such recognized meanings.

§ 1.3 Capitalization

Terms capitalized in these General Conditions include those that are (1) specifically defined, (2) the titles of numbered articles, or (3) the titles of other documents published by the American Institute of Architects.

§ 1.4 Interpretation

In the interest of brevity the Contract Documents frequently omit modifying words such as "all" and "any" and articles such as "the" and "an," but the fact that a modifier or an article is absent from one statement and appears in another is not intended to affect the interpretation of either statement.

§ 1.5 Ownership and Use of Drawings, Specifications, and Other Instruments of Service

§ 1.5.1 The Architect and the Architect's consultants shall be deemed the authors and owners of their respective Instruments of Service, including the Drawings and Specifications, and retain all common law, statutory, and other reserved rights in their Instruments of Service, including copyrights. The Contractor, Subcontractors, Sub-subcontractors, and suppliers shall not own or claim a copyright in the Instruments of Service. Submittal or distribution to meet official regulatory requirements or for other purposes in connection with the Project is not to be construed as publication in derogation of the Architect's or Architect's consultants' reserved rights.

§ 1.5.2 The Contractor, Subcontractors, Sub-subcontractors, and suppliers are authorized to use and reproduce the Instruments of Service provided to them, subject to any protocols established pursuant to Sections 1.7 and 1.8, solely and exclusively for execution of the Work. All copies made under this authorization shall bear the copyright notice, if any, shown on the Instruments of Service. The Contractor, Subcontractors, Sub-subcontractors, and suppliers may not use the Instruments of Service on other projects or for additions to the Project outside the scope of the Work without the specific written consent of the Owner, Architect, and the Architect's consultants.

§ 1.6 Notice

§ 1.6.1 Except as otherwise provided in Section 1.6.2, where the Contract Documents require one party to notify or give notice to the other party, such notice shall be provided in writing to the designated representative of the party to whom the notice is addressed and shall be deemed to have been duly served if delivered in person, by mail, by courier, or by electronic transmission if a method for electronic transmission is set forth in the Agreement.

§ 1.6.2 Notice of Claims as provided in Section 15.1.3 shall be provided in writing and shall be deemed to have been duly served only if delivered to the designated representative of the party to whom the notice is addressed by certified or registered mail, or by courier providing proof of delivery.

§ 1.7 Digital Data Use and Transmission

The parties shall agree upon protocols governing the transmission and use of Instruments of Service or any other information or documentation in digital form. The parties will use AIA Document E203™–2013, Building Information Modeling and Digital Data Exhibit, to establish the protocols for the development, use, transmission, and exchange of digital data.

§ 1.8 Building Information Models Use and Reliance

Any use of, or reliance on, all or a portion of a building information model without agreement to protocols governing the use of, and reliance on, the information contained in the model and without having those protocols set forth in AIA Document E203™–2013, Building Information Modeling and Digital Data Exhibit, and the requisite AIA Document

G202™–2013, Project Building Information Modeling Protocol Form, shall be at the using or relying party's sole risk and without liability to the other party and its contractors or consultants, the authors of, or contributors to, the building information model, and each of their agents and employees.

ARTICLE 2 OWNER

§ 2.1 General

§ 2.1.1 The Owner is the person or entity identified as such in the Agreement and is referred to throughout the Contract Documents as if singular in number. The Owner shall designate in writing a representative who shall have express authority to bind the Owner with respect to all matters requiring the Owner's approval or authorization. Except as otherwise provided in Section 4.2.1, the Architect does not have such authority. The term "Owner" means the Owner or the Owner's authorized representative.

§ 2.1.2 The Owner shall furnish to the Contractor, within fifteen days after receipt of a written request, information necessary and relevant for the Contractor to evaluate, give notice of, or enforce mechanic's lien rights. Such information shall include a correct statement of the record legal title to the property on which the Project is located, usually referred to as the site, and the Owner's interest therein.

§ 2.2 Evidence of the Owner's Financial Arrangements

§ 2.2.1 Prior to commencement of the Work and upon written request by the Contractor, the Owner shall furnish to the Contractor reasonable evidence that the Owner has made financial arrangements to fulfill the Owner's obligations under the Contract. The Contractor shall have no obligation to commence the Work until the Owner provides such evidence. If commencement of the Work is delayed under this Section 2.2.1, the Contract Time shall be extended appropriately.

§ 2.2.2 Following commencement of the Work and upon written request by the Contractor, the Owner shall furnish to the Contractor reasonable evidence that the Owner has made financial arrangements to fulfill the Owner's obligations under the Contract only if (1) the Owner fails to make payments to the Contractor as the Contract Documents require; (2) the Contractor identifies in writing a reasonable concern regarding the Owner's ability to make payment when due; or (3) a change in the Work materially changes the Contract Sum. If the Owner fails to provide such evidence, as required, within fourteen days of the Contractor's request, the Contractor may immediately stop the Work and, in that event, shall notify the Owner that the Work has stopped. However, if the request is made because a change in the Work materially changes the Contract Sum under (3) above, the Contractor may immediately stop only that portion of the Work affected by the change until reasonable evidence is provided. If the Work is stopped under this Section 2.2.2, the Contract Time shall be extended appropriately and the Contract Sum shall be increased by the amount of the Contractor's reasonable costs of shutdown, delay and start-up, plus interest as provided in the Contract Documents.

§ 2.2.3 After the Owner furnishes evidence of financial arrangements under this Section 2.2, the Owner shall not materially vary such financial arrangements without prior notice to the Contractor.

§ 2.2.4 Where the Owner has designated information furnished under this Section 2.2 as "confidential," the Contractor shall keep the information confidential and shall not disclose it to any other person. However, the Contractor may disclose "confidential" information, after seven (7) days' notice to the Owner, where disclosure is required by law, including a subpoena or other form of compulsory legal process issued by a court or governmental entity, or by court or arbitrator(s) order. The Contractor may also disclose "confidential" information to its employees, consultants, sureties, Subcontractors and their employees, Sub-subcontractors, and others who need to know the content of such information solely and exclusively for the Project and who agree to maintain the confidentiality of such information.

§ 2.3 Information and Services Required of the Owner

§ 2.3.1 Except for permits and fees that are the responsibility of the Contractor under the Contract Documents, including those required under Section 3.7.1, the Owner shall secure and pay for necessary approvals, easements, assessments and charges required for construction, use or occupancy of permanent structures or for permanent changes in existing facilities.

§ 2.3.2 The Owner shall retain an architect lawfully licensed to practice architecture, or an entity lawfully practicing architecture, in the jurisdiction where the Project is located. That person or entity is identified as the Architect in the Agreement and is referred to throughout the Contract Documents as if singular in number.

§ 2.3.3 If the employment of the Architect terminates, the Owner shall employ a successor to whom the Contractor has no reasonable objection and whose status under the Contract Documents shall be that of the Architect.

§ 2.3.4 The Owner shall furnish surveys describing physical characteristics, legal limitations and utility locations for the site of the Project, and a legal description of the site. The Contractor shall be entitled to rely on the accuracy of information furnished by the Owner but shall exercise proper precautions relating to the safe performance of the Work.

§ 2.3.5 The Owner shall furnish information or services required of the Owner by the Contract Documents with reasonable promptness. The Owner shall also furnish any other information or services under the Owner's control and relevant to the Contractor's performance of the Work with reasonable promptness after receiving the Contractor's written request for such information or services.

§ 2.3.6 Unless otherwise provided in the Contract Documents, the Owner shall furnish to the Contractor one copy of the Contract Documents for purposes of making reproductions pursuant to Section 1.5.2.

§ 2.4 Owner's Right to Stop the Work

If the Contractor fails to correct Work that is not in accordance with the requirements of the Contract Documents as required by Section 12.2 or repeatedly fails to carry out Work in accordance with the Contract Documents, the Owner may issue a written order to the Contractor to stop the Work, or any portion thereof, until the cause for such order has been eliminated; however, the right of the Owner to stop the Work shall not give rise to a duty on the part of the Owner to exercise this right for the benefit of the Contractor or any other person or entity, except to the extent required by Section 6.1.3.

§ 2.5 Owner's Right to Carry Out the Work

If the Contractor defaults or neglects to carry out the Work in accordance with the Contract Documents and fails within a ten-day period after receipt of notice from the Owner to commence and continue correction of such default or neglect with diligence and promptness, the Owner may, without prejudice to other remedies the Owner may have, correct such default or neglect. Such action by the Owner and amounts charged to the Contractor are both subject to prior approval of the Architect and the Architect may, pursuant to Section 9.5.1, withhold or nullify a Certificate for Payment in whole or in part, to the extent reasonably necessary to reimburse the Owner for the reasonable cost of correcting such deficiencies, including Owner's expenses and compensation for the Architect's additional services made necessary by such default, neglect, or failure. If current and future payments are not sufficient to cover such amounts, the Contractor shall pay the difference to the Owner. If the Contractor disagrees with the actions of the Owner or the Architect, or the amounts claimed as costs to the Owner, the Contractor may file a Claim pursuant to Article 15.

ARTICLE 3 CONTRACTOR

§ 3.1 General

§ 3.1.1 The Contractor is the person or entity identified as such in the Agreement and is referred to throughout the Contract Documents as if singular in number. The Contractor shall be lawfully licensed, if required in the jurisdiction where the Project is located. The Contractor shall designate in writing a representative who shall have express authority to bind the Contractor with respect to all matters under this Contract. The term "Contractor" means the Contractor or the Contractor's authorized representative.

§ 3.1.2 The Contractor shall perform the Work in accordance with the Contract Documents.

§ 3.1.3 The Contractor shall not be relieved of its obligations to perform the Work in accordance with the Contract Documents either by activities or duties of the Architect in the Architect's administration of the Contract, or by tests, inspections or approvals required or performed by persons or entities other than the Contractor.

§ 3.2 Review of Contract Documents and Field Conditions by Contractor

§ 3.2.1 Execution of the Contract by the Contractor is a representation that the Contractor has visited the site, become generally familiar with local conditions under which the Work is to be performed, and correlated personal observations with requirements of the Contract Documents.

§ 3.2.2 Because the Contract Documents are complementary, the Contractor shall, before starting each portion of the Work, carefully study and compare the various Contract Documents relative to that portion of the Work, as well as the information furnished by the Owner pursuant to Section 2.3.4, shall take field measurements of any existing conditions related to that portion of the Work, and shall observe any conditions at the site affecting it. These obligations are for the purpose of facilitating coordination and construction by the Contractor and are not for the purpose of discovering errors, omissions, or inconsistencies in the Contract Documents; however, the Contractor shall promptly report to the Architect any errors, inconsistencies or omissions discovered by or made known to the Contractor as a request for information in such form as the Architect may require. It is recognized that the Contractor's review is made in the Contractor's capacity as a contractor and not as a licensed design professional, unless otherwise specifically provided in the Contract Documents.

§ 3.2.3 The Contractor is not required to ascertain that the Contract Documents are in accordance with applicable laws, statutes, ordinances, codes, rules and regulations, or lawful orders of public authorities, but the Contractor shall promptly report to the Architect any nonconformity discovered by or made known to the Contractor as a request for information in such form as the Architect may require.

§ 3.2.4 If the Contractor believes that additional cost or time is involved because of clarifications or instructions the Architect issues in response to the Contractor's notices or requests for information pursuant to Sections 3.2.2 or 3.2.3, the Contractor shall submit Claims as provided in Article 15. If the Contractor fails to perform the obligations of Sections 3.2.2 or 3.2.3, the Contractor shall pay such costs and damages to the Owner, subject to Section 15.1.7, as would have been avoided if the Contractor had performed such obligations. If the Contractor performs those obligations, the Contractor shall not be liable to the Owner or Architect for damages resulting from errors, inconsistencies or omissions in the Contract Documents, for differences between field measurements or conditions and the Contract Documents, or for nonconformities of the Contract Documents to applicable laws, statutes, ordinances, codes, rules and regulations, and lawful orders of public authorities.

§ 3.3 Supervision and Construction Procedures

§ 3.3.1 The Contractor shall supervise and direct the Work, using the Contractor's best skill and attention. The Contractor shall be solely responsible for, and have control over, construction means, methods, techniques, sequences, and procedures, and for coordinating all portions of the Work under the Contract. If the Contract Documents give specific instructions concerning construction means, methods, techniques, sequences, or procedures, the Contractor shall evaluate the jobsite safety thereof and shall be solely responsible for the jobsite safety of such means, methods, techniques, sequences, or procedures. If the Contractor determines that such means, methods, techniques, sequences or procedures may not be safe, the Contractor shall give timely notice to the Owner and Architect, and shall propose alternative means, methods, techniques, sequences, or procedures. The Architect shall evaluate the proposed alternative solely for conformance with the design intent for the completed construction. Unless the Architect objects to the Contractor's proposed alternative, the Contractor shall perform the Work using its alternative means, methods, techniques, sequences, or procedures.

§ 3.3.2 The Contractor shall be responsible to the Owner for acts and omissions of the Contractor's employees, Subcontractors and their agents and employees, and other persons or entities performing portions of the Work for, or on behalf of, the Contractor or any of its Subcontractors.

§ 3.3.3 The Contractor shall be responsible for inspection of portions of Work already performed to determine that such portions are in proper condition to receive subsequent Work.

§ 3.4 Labor and Materials

§ 3.4.1 Unless otherwise provided in the Contract Documents, the Contractor shall provide and pay for labor, materials, equipment, tools, construction equipment and machinery, water, heat, utilities, transportation, and other facilities and services necessary for proper execution and completion of the Work, whether temporary or permanent and whether or not incorporated or to be incorporated in the Work.

§ 3.4.2 Except in the case of minor changes in the Work approved by the Architect in accordance with Section 3.12.8 or ordered by the Architect in accordance with Section 7.4, the Contractor may make substitutions only with the consent of the Owner, after evaluation by the Architect and in accordance with a Change Order or Construction Change Directive.

§ 3.4.3 The Contractor shall enforce strict discipline and good order among the Contractor's employees and other persons carrying out the Work. The Contractor shall not permit employment of unfit persons or persons not properly skilled in tasks assigned to them.

§ 3.5 Warranty

§ 3.5.1 The Contractor warrants to the Owner and Architect that materials and equipment furnished under the Contract will be of good quality and new unless the Contract Documents require or permit otherwise. The Contractor further warrants that the Work will conform to the requirements of the Contract Documents and will be free from defects, except for those inherent in the quality of the Work the Contract Documents require or permit. Work, materials, or equipment not conforming to these requirements may be considered defective. The Contractor's warranty excludes remedy for damage or defect caused by abuse, alterations to the Work not executed by the Contractor, improper or insufficient maintenance, improper operation, or normal wear and tear and normal usage. If required by the Architect, the Contractor shall furnish satisfactory evidence as to the kind and quality of materials and equipment.

§ 3.5.2 All material, equipment, or other special warranties required by the Contract Documents shall be issued in the name of the Owner, or shall be transferable to the Owner, and shall commence in accordance with Section 9.8.4.

§ 3.6 Taxes

The Contractor shall pay sales, consumer, use and similar taxes for the Work provided by the Contractor that are legally enacted when bids are received or negotiations concluded, whether or not yet effective or merely scheduled to go into effect.

§ 3.7 Permits, Fees, Notices and Compliance with Laws

§ 3.7.1 Unless otherwise provided in the Contract Documents, the Contractor shall secure and pay for the building permit as well as for other permits, fees, licenses, and inspections by government agencies necessary for proper execution and completion of the Work that are customarily secured after execution of the Contract and legally required at the time bids are received or negotiations concluded.

§ 3.7.2 The Contractor shall comply with and give notices required by applicable laws, statutes, ordinances, codes, rules and regulations, and lawful orders of public authorities applicable to performance of the Work.

§ 3.7.3 If the Contractor performs Work knowing it to be contrary to applicable laws, statutes, ordinances, codes, rules and regulations, or lawful orders of public authorities, the Contractor shall assume appropriate responsibility for such Work and shall bear the costs attributable to correction.

§ 3.7.4 Concealed or Unknown Conditions

If the Contractor encounters conditions at the site that are (1) subsurface or otherwise concealed physical conditions that differ materially from those indicated in the Contract Documents or (2) unknown physical conditions of an unusual nature that differ materially from those ordinarily found to exist and generally recognized as inherent in construction activities of the character provided for in the Contract Documents, the Contractor shall promptly provide notice to the Owner and the Architect before conditions are disturbed and in no event later than 14 days after first observance of the conditions. The Architect will promptly investigate such conditions and, if the Architect determines that they differ materially and cause an increase or decrease in the Contractor's cost of, or time required for, performance of any part of the Work, will recommend that an equitable adjustment be made in the Contract Sum or Contract Time, or both. If the Architect determines that the conditions at the site are not materially different from those indicated in the Contract Documents and that no change in the terms of the Contract is justified, the Architect shall promptly notify the Owner and Contractor, stating the reasons. If either party disputes the Architect's determination or recommendation, that party may submit a Claim as provided in Article 15.

§ 3.7.5 If, in the course of the Work, the Contractor encounters human remains or recognizes the existence of burial markers, archaeological sites or wetlands not indicated in the Contract Documents, the Contractor shall immediately suspend any operations that would affect them and shall notify the Owner and Architect. Upon receipt of such notice, the Owner shall promptly take any action necessary to obtain governmental authorization required to resume the operations. The Contractor shall continue to suspend such operations until otherwise instructed by the Owner but shall continue with all other operations that do not affect those remains or features. Requests for adjustments in the Contract Sum and Contract Time arising from the existence of such remains or features may be made as provided in Article 15.

§ 3.8 Allowances

§ 3.8.1 The Contractor shall include in the Contract Sum all allowances stated in the Contract Documents. Items covered by allowances shall be supplied for such amounts and by such persons or entities as the Owner may direct, but the Contractor shall not be required to employ persons or entities to whom the Contractor has reasonable objection.

§ 3.8.2 Unless otherwise provided in the Contract Documents,

- **.1** allowances shall cover the cost to the Contractor of materials and equipment delivered at the site and all required taxes, less applicable trade discounts;
- **.2** Contractor's costs for unloading and handling at the site, labor, installation costs, overhead, profit, and other expenses contemplated for stated allowance amounts shall be included in the Contract Sum but not in the allowances; and
- **.3** whenever costs are more than or less than allowances, the Contract Sum shall be adjusted accordingly by Change Order. The amount of the Change Order shall reflect (1) the difference between actual costs and the allowances under Section 3.8.2.1 and (2) changes in Contractor's costs under Section 3.8.2.2.

§ 3.8.3 Materials and equipment under an allowance shall be selected by the Owner with reasonable promptness.

§ 3.9 Superintendent

§ 3.9.1 The Contractor shall employ a competent superintendent and necessary assistants who shall be in attendance at the Project site during performance of the Work. The superintendent shall represent the Contractor, and communications given to the superintendent shall be as binding as if given to the Contractor.

§ 3.9.2 The Contractor, as soon as practicable after award of the Contract, shall notify the Owner and Architect of the name and qualifications of a proposed superintendent. Within 14 days of receipt of the information, the Architect may notify the Contractor, stating whether the Owner or the Architect (1) has reasonable objection to the proposed superintendent or (2) requires additional time for review. Failure of the Architect to provide notice within the 14-day period shall constitute notice of no reasonable objection.

§ 3.9.3 The Contractor shall not employ a proposed superintendent to whom the Owner or Architect has made reasonable and timely objection. The Contractor shall not change the superintendent without the Owner's consent, which shall not unreasonably be withheld or delayed.

§ 3.10 Contractor's Construction and Submittal Schedules

§ 3.10.1 The Contractor, promptly after being awarded the Contract, shall submit for the Owner's and Architect's information a Contractor's construction schedule for the Work. The schedule shall contain detail appropriate for the Project, including (1) the date of commencement of the Work, interim schedule milestone dates, and the date of Substantial Completion; (2) an apportionment of the Work by construction activity; and (3) the time required for completion of each portion of the Work. The schedule shall provide for the orderly progression of the Work to completion and shall not exceed time limits current under the Contract Documents. The schedule shall be revised at appropriate intervals as required by the conditions of the Work and Project.

§ 3.10.2 The Contractor, promptly after being awarded the Contract and thereafter as necessary to maintain a current submittal schedule, shall submit a submittal schedule for the Architect's approval. The Architect's approval shall not be unreasonably delayed or withheld. The submittal schedule shall (1) be coordinated with the Contractor's construction schedule, and (2) allow the Architect reasonable time to review submittals. If the Contractor fails to submit a submittal schedule, or fails to provide submittals in accordance with the approved submittal schedule, the Contractor shall not be entitled to any increase in Contract Sum or extension of Contract Time based on the time required for review of submittals.

§ 3.10.3 The Contractor shall perform the Work in general accordance with the most recent schedules submitted to the Owner and Architect.

§ 3.11 Documents and Samples at the Site

The Contractor shall make available, at the Project site, the Contract Documents, including Change Orders, Construction Change Directives, and other Modifications, in good order and marked currently to indicate field changes and selections made during construction, and the approved Shop Drawings, Product Data, Samples, and similar required submittals. These shall be in electronic form or paper copy, available to the Architect and Owner, and

delivered to the Architect for submittal to the Owner upon completion of the Work as a record of the Work as constructed.

§ 3.12 Shop Drawings, Product Data and Samples

§ 3.12.1 Shop Drawings are drawings, diagrams, schedules, and other data specially prepared for the Work by the Contractor or a Subcontractor, Sub-subcontractor, manufacturer, supplier, or distributor to illustrate some portion of the Work.

§ 3.12.2 Product Data are illustrations, standard schedules, performance charts, instructions, brochures, diagrams, and other information furnished by the Contractor to illustrate materials or equipment for some portion of the Work.

§ 3.12.3 Samples are physical examples that illustrate materials, equipment, or workmanship, and establish standards by which the Work will be judged.

§ 3.12.4 Shop Drawings, Product Data, Samples, and similar submittals are not Contract Documents. Their purpose is to demonstrate how the Contractor proposes to conform to the information given and the design concept expressed in the Contract Documents for those portions of the Work for which the Contract Documents require submittals. Review by the Architect is subject to the limitations of Section 4.2.7. Informational submittals upon which the Architect is not expected to take responsive action may be so identified in the Contract Documents. Submittals that are not required by the Contract Documents may be returned by the Architect without action.

§ 3.12.5 The Contractor shall review for compliance with the Contract Documents, approve, and submit to the Architect, Shop Drawings, Product Data, Samples, and similar submittals required by the Contract Documents, in accordance with the submittal schedule approved by the Architect or, in the absence of an approved submittal schedule, with reasonable promptness and in such sequence as to cause no delay in the Work or in the activities of the Owner or of Separate Contractors.

§ 3.12.6 By submitting Shop Drawings, Product Data, Samples, and similar submittals, the Contractor represents to the Owner and Architect that the Contractor has (1) reviewed and approved them, (2) determined and verified materials, field measurements and field construction criteria related thereto, or will do so, and (3) checked and coordinated the information contained within such submittals with the requirements of the Work and of the Contract Documents.

§ 3.12.7 The Contractor shall perform no portion of the Work for which the Contract Documents require submittal and review of Shop Drawings, Product Data, Samples, or similar submittals, until the respective submittal has been approved by the Architect.

§ 3.12.8 The Work shall be in accordance with approved submittals except that the Contractor shall not be relieved of responsibility for deviations from the requirements of the Contract Documents by the Architect's approval of Shop Drawings, Product Data, Samples, or similar submittals, unless the Contractor has specifically notified the Architect of such deviation at the time of submittal and (1) the Architect has given written approval to the specific deviation as a minor change in the Work, or (2) a Change Order or Construction Change Directive has been issued authorizing the deviation. The Contractor shall not be relieved of responsibility for errors or omissions in Shop Drawings, Product Data, Samples, or similar submittals, by the Architect's approval thereof.

§ 3.12.9 The Contractor shall direct specific attention, in writing or on resubmitted Shop Drawings, Product Data, Samples, or similar submittals, to revisions other than those requested by the Architect on previous submittals. In the absence of such notice, the Architect's approval of a resubmission shall not apply to such revisions.

§ 3.12.10 The Contractor shall not be required to provide professional services that constitute the practice of architecture or engineering unless such services are specifically required by the Contract Documents for a portion of the Work or unless the Contractor needs to provide such services in order to carry out the Contractor's responsibilities for construction means, methods, techniques, sequences, and procedures. The Contractor shall not be required to provide professional services in violation of applicable law.

§ 3.12.10.1 If professional design services or certifications by a design professional related to systems, materials, or equipment are specifically required of the Contractor by the Contract Documents, the Owner and the Architect will

specify all performance and design criteria that such services must satisfy. The Contractor shall be entitled to rely upon the adequacy and accuracy of the performance and design criteria provided in the Contract Documents. The Contractor shall cause such services or certifications to be provided by an appropriately licensed design professional, whose signature and seal shall appear on all drawings, calculations, specifications, certifications, Shop Drawings, and other submittals prepared by such professional. Shop Drawings, and other submittals related to the Work, designed or certified by such professional, if prepared by others, shall bear such professional's written approval when submitted to the Architect. The Owner and the Architect shall be entitled to rely upon the adequacy and accuracy of the services, certifications, and approvals performed or provided by such design professionals, provided the Owner and Architect have specified to the Contractor the performance and design criteria that such services must satisfy. Pursuant to this Section 3.12.10, the Architect will review and approve or take other appropriate action on submittals only for the limited purpose of checking for conformance with information given and the design concept expressed in the Contract Documents.

§ 3.12.10.2 If the Contract Documents require the Contractor's design professional to certify that the Work has been performed in accordance with the design criteria, the Contractor shall furnish such certifications to the Architect at the time and in the form specified by the Architect.

§ 3.13 Use of Site

The Contractor shall confine operations at the site to areas permitted by applicable laws, statutes, ordinances, codes, rules and regulations, lawful orders of public authorities, and the Contract Documents and shall not unreasonably encumber the site with materials or equipment.

§ 3.14 Cutting and Patching

§ 3.14.1 The Contractor shall be responsible for cutting, fitting, or patching required to complete the Work or to make its parts fit together properly. All areas requiring cutting, fitting, or patching shall be restored to the condition existing prior to the cutting, fitting, or patching, unless otherwise required by the Contract Documents.

§ 3.14.2 The Contractor shall not damage or endanger a portion of the Work or fully or partially completed construction of the Owner or Separate Contractors by cutting, patching, or otherwise altering such construction, or by excavation. The Contractor shall not cut or otherwise alter construction by the Owner or a Separate Contractor except with written consent of the Owner and of the Separate Contractor. Consent shall not be unreasonably withheld. The Contractor shall not unreasonably withhold, from the Owner or a Separate Contractor, its consent to cutting or otherwise altering the Work.

§ 3.15 Cleaning Up

§ 3.15.1 The Contractor shall keep the premises and surrounding area free from accumulation of waste materials and rubbish caused by operations under the Contract. At completion of the Work, the Contractor shall remove waste materials, rubbish, the Contractor's tools, construction equipment, machinery, and surplus materials from and about the Project.

§ 3.15.2 If the Contractor fails to clean up as provided in the Contract Documents, the Owner may do so and the Owner shall be entitled to reimbursement from the Contractor.

§ 3.16 Access to Work

The Contractor shall provide the Owner and Architect with access to the Work in preparation and progress wherever located.

§ 3.17 Royalties, Patents and Copyrights

The Contractor shall pay all royalties and license fees. The Contractor shall defend suits or claims for infringement of copyrights and patent rights and shall hold the Owner and Architect harmless from loss on account thereof, but shall not be responsible for defense or loss when a particular design, process, or product of a particular manufacturer or manufacturers is required by the Contract Documents, or where the copyright violations are contained in Drawings, Specifications, or other documents prepared by the Owner or Architect. However, if an infringement of a copyright or patent is discovered by, or made known to, the Contractor, the Contractor shall be responsible for the loss unless the information is promptly furnished to the Architect.

§ 3.18 Indemnification

§ 3.18.1 To the fullest extent permitted by law, the Contractor shall indemnify and hold harmless the Owner, Architect, Architect's consultants, and agents and employees of any of them from and against claims, damages, losses, and expenses, including but not limited to attorneys' fees, arising out of or resulting from performance of the Work, provided that such claim, damage, loss, or expense is attributable to bodily injury, sickness, disease or death, or to injury to or destruction of tangible property (other than the Work itself), but only to the extent caused by the negligent acts or omissions of the Contractor, a Subcontractor, anyone directly or indirectly employed by them, or anyone for whose acts they may be liable, regardless of whether or not such claim, damage, loss, or expense is caused in part by a party indemnified hereunder. Such obligation shall not be construed to negate, abridge, or reduce other rights or obligations of indemnity that would otherwise exist as to a party or person described in this Section 3.18.

§ 3.18.2 In claims against any person or entity indemnified under this Section 3.18 by an employee of the Contractor, a Subcontractor, anyone directly or indirectly employed by them, or anyone for whose acts they may be liable, the indemnification obligation under Section 3.18.1 shall not be limited by a limitation on amount or type of damages, compensation, or benefits payable by or for the Contractor or a Subcontractor under workers' compensation acts, disability benefit acts, or other employee benefit acts.

ARTICLE 4 ARCHITECT

§ 4.1 General

§ 4.1.1 The Architect is the person or entity retained by the Owner pursuant to Section 2.3.2 and identified as such in the Agreement.

§ 4.1.2 Duties, responsibilities, and limitations of authority of the Architect as set forth in the Contract Documents shall not be restricted, modified, or extended without written consent of the Owner, Contractor, and Architect. Consent shall not be unreasonably withheld.

§ 4.2 Administration of the Contract

§ 4.2.1 The Architect will provide administration of the Contract as described in the Contract Documents and will be an Owner's representative during construction until the date the Architect issues the final Certificate for Payment. The Architect will have authority to act on behalf of the Owner only to the extent provided in the Contract Documents.

§ 4.2.2 The Architect will visit the site at intervals appropriate to the stage of construction, or as otherwise agreed with the Owner, to become generally familiar with the progress and quality of the portion of the Work completed, and to determine in general if the Work observed is being performed in a manner indicating that the Work, when fully completed, will be in accordance with the Contract Documents. However, the Architect will not be required to make exhaustive or continuous on-site inspections to check the quality or quantity of the Work. The Architect will not have control over, charge of, or responsibility for the construction means, methods, techniques, sequences or procedures, or for the safety precautions and programs in connection with the Work, since these are solely the Contractor's rights and responsibilities under the Contract Documents.

§ 4.2.3 On the basis of the site visits, the Architect will keep the Owner reasonably informed about the progress and quality of the portion of the Work completed, and promptly report to the Owner (1) known deviations from the Contract Documents, (2) known deviations from the most recent construction schedule submitted by the Contractor, and (3) defects and deficiencies observed in the Work. The Architect will not be responsible for the Contractor's failure to perform the Work in accordance with the requirements of the Contract Documents. The Architect will not have control over or charge of, and will not be responsible for acts or omissions of, the Contractor, Subcontractors, or their agents or employees, or any other persons or entities performing portions of the Work.

§ 4.2.4 Communications

The Owner and Contractor shall include the Architect in all communications that relate to or affect the Architect's services or professional responsibilities. The Owner shall promptly notify the Architect of the substance of any direct communications between the Owner and the Contractor otherwise relating to the Project. Communications by and with the Architect's consultants shall be through the Architect. Communications by and with Subcontractors and suppliers shall be through the Contractor. Communications by and with Separate Contractors shall be through the Owner. The Contract Documents may specify other communication protocols.

§ 4.2.5 Based on the Architect's evaluations of the Contractor's Applications for Payment, the Architect will review and certify the amounts due the Contractor and will issue Certificates for Payment in such amounts.

§ 4.2.6 The Architect has authority to reject Work that does not conform to the Contract Documents. Whenever the Architect considers it necessary or advisable, the Architect will have authority to require inspection or testing of the Work in accordance with Sections 13.4.2 and 13.4.3, whether or not the Work is fabricated, installed or completed. However, neither this authority of the Architect nor a decision made in good faith either to exercise or not to exercise such authority shall give rise to a duty or responsibility of the Architect to the Contractor, Subcontractors, suppliers, their agents or employees, or other persons or entities performing portions of the Work.

§ 4.2.7 The Architect will review and approve, or take other appropriate action upon, the Contractor's submittals such as Shop Drawings, Product Data, and Samples, but only for the limited purpose of checking for conformance with information given and the design concept expressed in the Contract Documents. The Architect's action will be taken in accordance with the submittal schedule approved by the Architect or, in the absence of an approved submittal schedule, with reasonable promptness while allowing sufficient time in the Architect's professional judgment to permit adequate review. Review of such submittals is not conducted for the purpose of determining the accuracy and completeness of other details such as dimensions and quantities, or for substantiating instructions for installation or performance of equipment or systems, all of which remain the responsibility of the Contractor as required by the Contract Documents. The Architect's review of the Contractor's submittals shall not relieve the Contractor of the obligations under Sections 3.3, 3.5, and 3.12. The Architect's review shall not constitute approval of safety precautions or of any construction means, methods, techniques, sequences, or procedures. The Architect's approval of a specific item shall not indicate approval of an assembly of which the item is a component.

§ 4.2.8 The Architect will prepare Change Orders and Construction Change Directives, and may order minor changes in the Work as provided in Section 7.4. The Architect will investigate and make determinations and recommendations regarding concealed and unknown conditions as provided in Section 3.7.4.

§ 4.2.9 The Architect will conduct inspections to determine the date or dates of Substantial Completion and the date of final completion; issue Certificates of Substantial Completion pursuant to Section 9.8; receive and forward to the Owner, for the Owner's review and records, written warranties and related documents required by the Contract and assembled by the Contractor pursuant to Section 9.10; and issue a final Certificate for Payment pursuant to Section 9.10.

§ 4.2.10 If the Owner and Architect agree, the Architect will provide one or more Project representatives to assist in carrying out the Architect's responsibilities at the site. The Owner shall notify the Contractor of any change in the duties, responsibilities and limitations of authority of the Project representatives.

§ 4.2.11 The Architect will interpret and decide matters concerning performance under, and requirements of, the Contract Documents on written request of either the Owner or Contractor. The Architect's response to such requests will be made in writing within any time limits agreed upon or otherwise with reasonable promptness.

§ 4.2.12 Interpretations and decisions of the Architect will be consistent with the intent of, and reasonably inferable from, the Contract Documents and will be in writing or in the form of drawings. When making such interpretations and decisions, the Architect will endeavor to secure faithful performance by both Owner and Contractor, will not show partiality to either, and will not be liable for results of interpretations or decisions rendered in good faith.

§ 4.2.13 The Architect's decisions on matters relating to aesthetic effect will be final if consistent with the intent expressed in the Contract Documents.

§ 4.2.14 The Architect will review and respond to requests for information about the Contract Documents. The Architect's response to such requests will be made in writing within any time limits agreed upon or otherwise with reasonable promptness. If appropriate, the Architect will prepare and issue supplemental Drawings and Specifications in response to the requests for information.

ARTICLE 5 SUBCONTRACTORS

§ 5.1 Definitions

§ 5.1.1 A Subcontractor is a person or entity who has a direct contract with the Contractor to perform a portion of the Work at the site. The term "Subcontractor" is referred to throughout the Contract Documents as if singular in number and means a Subcontractor or an authorized representative of the Subcontractor. The term "Subcontractor" does not include a Separate Contractor or the subcontractors of a Separate Contractor.

§ 5.1.2 A Sub-subcontractor is a person or entity who has a direct or indirect contract with a Subcontractor to perform a portion of the Work at the site. The term "Sub-subcontractor" is referred to throughout the Contract Documents as if singular in number and means a Sub-subcontractor or an authorized representative of the Sub-subcontractor.

§ 5.2 Award of Subcontracts and Other Contracts for Portions of the Work

§ 5.2.1 Unless otherwise stated in the Contract Documents, the Contractor, as soon as practicable after award of the Contract, shall notify the Owner and Architect of the persons or entities proposed for each principal portion of the Work, including those who are to furnish materials or equipment fabricated to a special design. Within 14 days of receipt of the information, the Architect may notify the Contractor whether the Owner or the Architect (1) has reasonable objection to any such proposed person or entity or (2) requires additional time for review. Failure of the Architect to provide notice within the 14-day period shall constitute notice of no reasonable objection.

§ 5.2.2 The Contractor shall not contract with a proposed person or entity to whom the Owner or Architect has made reasonable and timely objection. The Contractor shall not be required to contract with anyone to whom the Contractor has made reasonable objection.

§ 5.2.3 If the Owner or Architect has reasonable objection to a person or entity proposed by the Contractor, the Contractor shall propose another to whom the Owner or Architect has no reasonable objection. If the proposed but rejected Subcontractor was reasonably capable of performing the Work, the Contract Sum and Contract Time shall be increased or decreased by the difference, if any, occasioned by such change, and an appropriate Change Order shall be issued before commencement of the substitute Subcontractor's Work. However, no increase in the Contract Sum or Contract Time shall be allowed for such change unless the Contractor has acted promptly and responsively in submitting names as required.

§ 5.2.4 The Contractor shall not substitute a Subcontractor, person, or entity for one previously selected if the Owner or Architect makes reasonable objection to such substitution.

§ 5.3 Subcontractual Relations

By appropriate written agreement, the Contractor shall require each Subcontractor, to the extent of the Work to be performed by the Subcontractor, to be bound to the Contractor by terms of the Contract Documents, and to assume toward the Contractor all the obligations and responsibilities, including the responsibility for safety of the Subcontractor's Work that the Contractor, by these Contract Documents, assumes toward the Owner and Architect. Each subcontract agreement shall preserve and protect the rights of the Owner and Architect under the Contract Documents with respect to the Work to be performed by the Subcontractor so that subcontracting thereof will not prejudice such rights, and shall allow to the Subcontractor, unless specifically provided otherwise in the subcontract agreement, the benefit of all rights, remedies, and redress against the Contractor that the Contractor, by the Contract Documents, has against the Owner. Where appropriate, the Contractor shall require each Subcontractor to enter into similar agreements with Sub-subcontractors. The Contractor shall make available to each proposed Subcontractor, prior to the execution of the subcontract agreement, copies of the Contract Documents to which the Subcontractor will be bound, and, upon written request of the Subcontractor, identify to the Subcontractor terms and conditions of the proposed subcontract agreement that may be at variance with the Contract Documents. Subcontractors will similarly make copies of applicable portions of such documents available to their respective proposed Sub-subcontractors.

§ 5.4 Contingent Assignment of Subcontracts

§ 5.4.1 Each subcontract agreement for a portion of the Work is assigned by the Contractor to the Owner, provided that

- **.1** assignment is effective only after termination of the Contract by the Owner for cause pursuant to Section 14.2 and only for those subcontract agreements that the Owner accepts by notifying the Subcontractor and Contractor; and
- **.2** assignment is subject to the prior rights of the surety, if any, obligated under bond relating to the Contract.

When the Owner accepts the assignment of a subcontract agreement, the Owner assumes the Contractor's rights and obligations under the subcontract.

§ 5.4.2 Upon such assignment, if the Work has been suspended for more than 30 days, the Subcontractor's compensation shall be equitably adjusted for increases in cost resulting from the suspension.

§ 5.4.3 Upon assignment to the Owner under this Section 5.4, the Owner may further assign the subcontract to a successor contractor or other entity. If the Owner assigns the subcontract to a successor contractor or other entity, the Owner shall nevertheless remain legally responsible for all of the successor contractor's obligations under the subcontract.

ARTICLE 6 CONSTRUCTION BY OWNER OR BY SEPARATE CONTRACTORS

§ 6.1 Owner's Right to Perform Construction and to Award Separate Contracts

§ 6.1.1 The term "Separate Contractor(s)" shall mean other contractors retained by the Owner under separate agreements. The Owner reserves the right to perform construction or operations related to the Project with the Owner's own forces, and with Separate Contractors retained under Conditions of the Contract substantially similar to those of this Contract, including those provisions of the Conditions of the Contract related to insurance and waiver of subrogation.

§ 6.1.2 When separate contracts are awarded for different portions of the Project or other construction or operations on the site, the term "Contractor" in the Contract Documents in each case shall mean the Contractor who executes each separate Owner-Contractor Agreement.

§ 6.1.3 The Owner shall provide for coordination of the activities of the Owner's own forces and of each Separate Contractor with the Work of the Contractor, who shall cooperate with them. The Contractor shall participate with any Separate Contractors and the Owner in reviewing their construction schedules. The Contractor shall make any revisions to its construction schedule deemed necessary after a joint review and mutual agreement. The construction schedules shall then constitute the schedules to be used by the Contractor, Separate Contractors, and the Owner until subsequently revised.

§ 6.1.4 Unless otherwise provided in the Contract Documents, when the Owner performs construction or operations related to the Project with the Owner's own forces or with Separate Contractors, the Owner or its Separate Contractors shall have the same obligations and rights that the Contractor has under the Conditions of the Contract, including, without excluding others, those stated in Article 3, this Article 6, and Articles 10, 11, and 12.

§ 6.2 Mutual Responsibility

§ 6.2.1 The Contractor shall afford the Owner and Separate Contractors reasonable opportunity for introduction and storage of their materials and equipment and performance of their activities, and shall connect and coordinate the Contractor's construction and operations with theirs as required by the Contract Documents.

§ 6.2.2 If part of the Contractor's Work depends for proper execution or results upon construction or operations by the Owner or a Separate Contractor, the Contractor shall, prior to proceeding with that portion of the Work, promptly notify the Architect of apparent discrepancies or defects in the construction or operations by the Owner or Separate Contractor that would render it unsuitable for proper execution and results of the Contractor's Work. Failure of the Contractor to notify the Architect of apparent discrepancies or defects prior to proceeding with the Work shall constitute an acknowledgment that the Owner's or Separate Contractor's completed or partially completed construction is fit and proper to receive the Contractor's Work. The Contractor shall not be responsible for discrepancies or defects in the construction or operations by the Owner or Separate Contractor that are not apparent.

§ 6.2.3 The Contractor shall reimburse the Owner for costs the Owner incurs that are payable to a Separate Contractor because of the Contractor's delays, improperly timed activities or defective construction. The Owner shall be responsible to the Contractor for costs the Contractor incurs because of a Separate Contractor's delays, improperly timed activities, damage to the Work or defective construction.

§ 6.2.4 The Contractor shall promptly remedy damage that the Contractor wrongfully causes to completed or partially completed construction or to property of the Owner or Separate Contractor as provided in Section 10.2.5.

§ 6.2.5 The Owner and each Separate Contractor shall have the same responsibilities for cutting and patching as are described for the Contractor in Section 3.14.

§ 6.3 Owner's Right to Clean Up

If a dispute arises among the Contractor, Separate Contractors, and the Owner as to the responsibility under their respective contracts for maintaining the premises and surrounding area free from waste materials and rubbish, the Owner may clean up and the Architect will allocate the cost among those responsible.

ARTICLE 7 CHANGES IN THE WORK

§ 7.1 General

§ 7.1.1 Changes in the Work may be accomplished after execution of the Contract, and without invalidating the Contract, by Change Order, Construction Change Directive or order for a minor change in the Work, subject to the limitations stated in this Article 7 and elsewhere in the Contract Documents.

§ 7.1.2 A Change Order shall be based upon agreement among the Owner, Contractor, and Architect. A Construction Change Directive requires agreement by the Owner and Architect and may or may not be agreed to by the Contractor. An order for a minor change in the Work may be issued by the Architect alone.

§ 7.1.3 Changes in the Work shall be performed under applicable provisions of the Contract Documents. The Contractor shall proceed promptly with changes in the Work, unless otherwise provided in the Change Order, Construction Change Directive, or order for a minor change in the Work.

§ 7.2 Change Orders

§ 7.2.1 A Change Order is a written instrument prepared by the Architect and signed by the Owner, Contractor, and Architect stating their agreement upon all of the following:

- **.1** The change in the Work;
- **.2** The amount of the adjustment, if any, in the Contract Sum; and
- **.3** The extent of the adjustment, if any, in the Contract Time.

§ 7.3 Construction Change Directives

§ 7.3.1 A Construction Change Directive is a written order prepared by the Architect and signed by the Owner and Architect, directing a change in the Work prior to agreement on adjustment, if any, in the Contract Sum or Contract Time, or both. The Owner may by Construction Change Directive, without invalidating the Contract, order changes in the Work within the general scope of the Contract consisting of additions, deletions, or other revisions, the Contract Sum and Contract Time being adjusted accordingly.

§ 7.3.2 A Construction Change Directive shall be used in the absence of total agreement on the terms of a Change Order.

§ 7.3.3 If the Construction Change Directive provides for an adjustment to the Contract Sum, the adjustment shall be based on one of the following methods:

- **.1** Mutual acceptance of a lump sum properly itemized and supported by sufficient substantiating data to permit evaluation;
- **.2** Unit prices stated in the Contract Documents or subsequently agreed upon;
- **.3** Cost to be determined in a manner agreed upon by the parties and a mutually acceptable fixed or percentage fee; or
- **.4** As provided in Section 7.3.4.

§ 7.3.4 If the Contractor does not respond promptly or disagrees with the method for adjustment in the Contract Sum, the Architect shall determine the adjustment on the basis of reasonable expenditures and savings of those performing the Work attributable to the change, including, in case of an increase in the Contract Sum, an amount for overhead and profit as set forth in the Agreement, or if no such amount is set forth in the Agreement, a reasonable amount. In such case, and also under Section 7.3.3.3, the Contractor shall keep and present, in such form as the Architect may prescribe, an itemized accounting together with appropriate supporting data. Unless otherwise provided in the Contract Documents, costs for the purposes of this Section 7.3.4 shall be limited to the following:

.1 Costs of labor, including applicable payroll taxes, fringe benefits required by agreement or custom, workers' compensation insurance, and other employee costs approved by the Architect;
.2 Costs of materials, supplies, and equipment, including cost of transportation, whether incorporated or consumed;
.3 Rental costs of machinery and equipment, exclusive of hand tools, whether rented from the Contractor or others;
.4 Costs of premiums for all bonds and insurance, permit fees, and sales, use, or similar taxes, directly related to the change; and
.5 Costs of supervision and field office personnel directly attributable to the change.

§ 7.3.5 If the Contractor disagrees with the adjustment in the Contract Time, the Contractor may make a Claim in accordance with applicable provisions of Article 15.

§ 7.3.6 Upon receipt of a Construction Change Directive, the Contractor shall promptly proceed with the change in the Work involved and advise the Architect of the Contractor's agreement or disagreement with the method, if any, provided in the Construction Change Directive for determining the proposed adjustment in the Contract Sum or Contract Time.

§ 7.3.7 A Construction Change Directive signed by the Contractor indicates the Contractor's agreement therewith, including adjustment in Contract Sum and Contract Time or the method for determining them. Such agreement shall be effective immediately and shall be recorded as a Change Order.

§ 7.3.8 The amount of credit to be allowed by the Contractor to the Owner for a deletion or change that results in a net decrease in the Contract Sum shall be actual net cost as confirmed by the Architect. When both additions and credits covering related Work or substitutions are involved in a change, the allowance for overhead and profit shall be figured on the basis of net increase, if any, with respect to that change.

§ 7.3.9 Pending final determination of the total cost of a Construction Change Directive to the Owner, the Contractor may request payment for Work completed under the Construction Change Directive in Applications for Payment. The Architect will make an interim determination for purposes of monthly certification for payment for those costs and certify for payment the amount that the Architect determines, in the Architect's professional judgment, to be reasonably justified. The Architect's interim determination of cost shall adjust the Contract Sum on the same basis as a Change Order, subject to the right of either party to disagree and assert a Claim in accordance with Article 15.

§ 7.3.10 When the Owner and Contractor agree with a determination made by the Architect concerning the adjustments in the Contract Sum and Contract Time, or otherwise reach agreement upon the adjustments, such agreement shall be effective immediately and the Architect will prepare a Change Order. Change Orders may be issued for all or any part of a Construction Change Directive.

§ 7.4 Minor Changes in the Work

The Architect may order minor changes in the Work that are consistent with the intent of the Contract Documents and do not involve an adjustment in the Contract Sum or an extension of the Contract Time. The Architect's order for minor changes shall be in writing. If the Contractor believes that the proposed minor change in the Work will affect the Contract Sum or Contract Time, the Contractor shall notify the Architect and shall not proceed to implement the change in the Work. If the Contractor performs the Work set forth in the Architect's order for a minor change without prior notice to the Architect that such change will affect the Contract Sum or Contract Time, the Contractor waives any adjustment to the Contract Sum or extension of the Contract Time.

ARTICLE 8 TIME

§ 8.1 Definitions

§ 8.1.1 Unless otherwise provided, Contract Time is the period of time, including authorized adjustments, allotted in the Contract Documents for Substantial Completion of the Work.

§ 8.1.2 The date of commencement of the Work is the date established in the Agreement.

§ 8.1.3 The date of Substantial Completion is the date certified by the Architect in accordance with Section 9.8.

§ 8.1.4 The term "day" as used in the Contract Documents shall mean calendar day unless otherwise specifically defined.

§ 8.2 Progress and Completion

§ 8.2.1 Time limits stated in the Contract Documents are of the essence of the Contract. By executing the Agreement, the Contractor confirms that the Contract Time is a reasonable period for performing the Work.

§ 8.2.2 The Contractor shall not knowingly, except by agreement or instruction of the Owner in writing, commence the Work prior to the effective date of insurance required to be furnished by the Contractor and Owner.

§ 8.2.3 The Contractor shall proceed expeditiously with adequate forces and shall achieve Substantial Completion within the Contract Time.

§ 8.3 Delays and Extensions of Time

§ 8.3.1 If the Contractor is delayed at any time in the commencement or progress of the Work by (1) an act or neglect of the Owner or Architect, of an employee of either, or of a Separate Contractor; (2) by changes ordered in the Work; (3) by labor disputes, fire, unusual delay in deliveries, unavoidable casualties, adverse weather conditions documented in accordance with Section 15.1.6.2, or other causes beyond the Contractor's control; (4) by delay authorized by the Owner pending mediation and binding dispute resolution; or (5) by other causes that the Contractor asserts, and the Architect determines, justify delay, then the Contract Time shall be extended for such reasonable time as the Architect may determine.

§ 8.3.2 Claims relating to time shall be made in accordance with applicable provisions of Article 15.

§ 8.3.3 This Section 8.3 does not preclude recovery of damages for delay by either party under other provisions of the Contract Documents.

ARTICLE 9 PAYMENTS AND COMPLETION

§ 9.1 Contract Sum

§ 9.1.1 The Contract Sum is stated in the Agreement and, including authorized adjustments, is the total amount payable by the Owner to the Contractor for performance of the Work under the Contract Documents.

§ 9.1.2 If unit prices are stated in the Contract Documents or subsequently agreed upon, and if quantities originally contemplated are materially changed so that application of such unit prices to the actual quantities causes substantial inequity to the Owner or Contractor, the applicable unit prices shall be equitably adjusted.

§ 9.2 Schedule of Values

Where the Contract is based on a stipulated sum or Guaranteed Maximum Price, the Contractor shall submit a schedule of values to the Architect before the first Application for Payment, allocating the entire Contract Sum to the various portions of the Work. The schedule of values shall be prepared in the form, and supported by the data to substantiate its accuracy, required by the Architect. This schedule, unless objected to by the Architect, shall be used as a basis for reviewing the Contractor's Applications for Payment. Any changes to the schedule of values shall be submitted to the Architect and supported by such data to substantiate its accuracy as the Architect may require, and unless objected to by the Architect, shall be used as a basis for reviewing the Contractor's subsequent Applications for Payment.

§ 9.3 Applications for Payment

§ 9.3.1 At least ten days before the date established for each progress payment, the Contractor shall submit to the Architect an itemized Application for Payment prepared in accordance with the schedule of values, if required under Section 9.2, for completed portions of the Work. The application shall be notarized, if required, and supported by all data substantiating the Contractor's right to payment that the Owner or Architect require, such as copies of requisitions, and releases and waivers of liens from Subcontractors and suppliers, and shall reflect retainage if provided for in the Contract Documents.

§ 9.3.1.1 As provided in Section 7.3.9, such applications may include requests for payment on account of changes in the Work that have been properly authorized by Construction Change Directives, or by interim determinations of the Architect, but not yet included in Change Orders.

§ 9.3.1.2 Applications for Payment shall not include requests for payment for portions of the Work for which the Contractor does not intend to pay a Subcontractor or supplier, unless such Work has been performed by others whom the Contractor intends to pay.

§ 9.3.2 Unless otherwise provided in the Contract Documents, payments shall be made on account of materials and equipment delivered and suitably stored at the site for subsequent incorporation in the Work. If approved in advance by the Owner, payment may similarly be made for materials and equipment suitably stored off the site at a location agreed upon in writing. Payment for materials and equipment stored on or off the site shall be conditioned upon compliance by the Contractor with procedures satisfactory to the Owner to establish the Owner's title to such materials and equipment or otherwise protect the Owner's interest, and shall include the costs of applicable insurance, storage, and transportation to the site, for such materials and equipment stored off the site.

§ 9.3.3 The Contractor warrants that title to all Work covered by an Application for Payment will pass to the Owner no later than the time of payment. The Contractor further warrants that upon submittal of an Application for Payment all Work for which Certificates for Payment have been previously issued and payments received from the Owner shall, to the best of the Contractor's knowledge, information, and belief, be free and clear of liens, claims, security interests, or encumbrances, in favor of the Contractor, Subcontractors, suppliers, or other persons or entities that provided labor, materials, and equipment relating to the Work.

§ 9.4 Certificates for Payment

§ 9.4.1 The Architect will, within seven days after receipt of the Contractor's Application for Payment, either (1) issue to the Owner a Certificate for Payment in the full amount of the Application for Payment, with a copy to the Contractor; or (2) issue to the Owner a Certificate for Payment for such amount as the Architect determines is properly due, and notify the Contractor and Owner of the Architect's reasons for withholding certification in part as provided in Section 9.5.1; or (3) withhold certification of the entire Application for Payment, and notify the Contractor and Owner of the Architect's reason for withholding certification in whole as provided in Section 9.5.1.

§ 9.4.2 The issuance of a Certificate for Payment will constitute a representation by the Architect to the Owner, based on the Architect's evaluation of the Work and the data in the Application for Payment, that, to the best of the Architect's knowledge, information, and belief, the Work has progressed to the point indicated, the quality of the Work is in accordance with the Contract Documents, and that the Contractor is entitled to payment in the amount certified. The foregoing representations are subject to an evaluation of the Work for conformance with the Contract Documents upon Substantial Completion, to results of subsequent tests and inspections, to correction of minor deviations from the Contract Documents prior to completion, and to specific qualifications expressed by the Architect. However, the issuance of a Certificate for Payment will not be a representation that the Architect has (1) made exhaustive or continuous on-site inspections to check the quality or quantity of the Work; (2) reviewed construction means, methods, techniques, sequences, or procedures; (3) reviewed copies of requisitions received from Subcontractors and suppliers and other data requested by the Owner to substantiate the Contractor's right to payment; or (4) made examination to ascertain how or for what purpose the Contractor has used money previously paid on account of the Contract Sum.

§ 9.5 Decisions to Withhold Certification

§ 9.5.1 The Architect may withhold a Certificate for Payment in whole or in part, to the extent reasonably necessary to protect the Owner, if in the Architect's opinion the representations to the Owner required by Section 9.4.2 cannot be made. If the Architect is unable to certify payment in the amount of the Application, the Architect will notify the Contractor and Owner as provided in Section 9.4.1. If the Contractor and Architect cannot agree on a revised amount, the Architect will promptly issue a Certificate for Payment for the amount for which the Architect is able to make such representations to the Owner. The Architect may also withhold a Certificate for Payment or, because of subsequently discovered evidence, may nullify the whole or a part of a Certificate for Payment previously issued, to such extent as may be necessary in the Architect's opinion to protect the Owner from loss for which the Contractor is responsible, including loss resulting from acts and omissions described in Section 3.3.2, because of

- .1 defective Work not remedied;
- .2 third party claims filed or reasonable evidence indicating probable filing of such claims, unless security acceptable to the Owner is provided by the Contractor;
- .3 failure of the Contractor to make payments properly to Subcontractors or suppliers for labor, materials or equipment;

.4 reasonable evidence that the Work cannot be completed for the unpaid balance of the Contract Sum;
.5 damage to the Owner or a Separate Contractor;
.6 reasonable evidence that the Work will not be completed within the Contract Time, and that the unpaid balance would not be adequate to cover actual or liquidated damages for the anticipated delay; or
.7 repeated failure to carry out the Work in accordance with the Contract Documents.

§ 9.5.2 When either party disputes the Architect's decision regarding a Certificate for Payment under Section 9.5.1, in whole or in part, that party may submit a Claim in accordance with Article 15.

§ 9.5.3 When the reasons for withholding certification are removed, certification will be made for amounts previously withheld.

§ 9.5.4 If the Architect withholds certification for payment under Section 9.5.1.3, the Owner may, at its sole option, issue joint checks to the Contractor and to any Subcontractor or supplier to whom the Contractor failed to make payment for Work properly performed or material or equipment suitably delivered. If the Owner makes payments by joint check, the Owner shall notify the Architect and the Contractor shall reflect such payment on its next Application for Payment.

§ 9.6 Progress Payments

§ 9.6.1 After the Architect has issued a Certificate for Payment, the Owner shall make payment in the manner and within the time provided in the Contract Documents, and shall so notify the Architect.

§ 9.6.2 The Contractor shall pay each Subcontractor, no later than seven days after receipt of payment from the Owner, the amount to which the Subcontractor is entitled, reflecting percentages actually retained from payments to the Contractor on account of the Subcontractor's portion of the Work. The Contractor shall, by appropriate agreement with each Subcontractor, require each Subcontractor to make payments to Sub-subcontractors in a similar manner.

§ 9.6.3 The Architect will, on request, furnish to a Subcontractor, if practicable, information regarding percentages of completion or amounts applied for by the Contractor and action taken thereon by the Architect and Owner on account of portions of the Work done by such Subcontractor.

§ 9.6.4 The Owner has the right to request written evidence from the Contractor that the Contractor has properly paid Subcontractors and suppliers amounts paid by the Owner to the Contractor for subcontracted Work. If the Contractor fails to furnish such evidence within seven days, the Owner shall have the right to contact Subcontractors and suppliers to ascertain whether they have been properly paid. Neither the Owner nor Architect shall have an obligation to pay, or to see to the payment of money to, a Subcontractor or supplier, except as may otherwise be required by law.

§ 9.6.5 The Contractor's payments to suppliers shall be treated in a manner similar to that provided in Sections 9.6.2, 9.6.3 and 9.6.4.

§ 9.6.6 A Certificate for Payment, a progress payment, or partial or entire use or occupancy of the Project by the Owner shall not constitute acceptance of Work not in accordance with the Contract Documents.

§ 9.6.7 Unless the Contractor provides the Owner with a payment bond in the full penal sum of the Contract Sum, payments received by the Contractor for Work properly performed by Subcontractors or provided by suppliers shall be held by the Contractor for those Subcontractors or suppliers who performed Work or furnished materials, or both, under contract with the Contractor for which payment was made by the Owner. Nothing contained herein shall require money to be placed in a separate account and not commingled with money of the Contractor, create any fiduciary liability or tort liability on the part of the Contractor for breach of trust, or entitle any person or entity to an award of punitive damages against the Contractor for breach of the requirements of this provision.

§ 9.6.8 Provided the Owner has fulfilled its payment obligations under the Contract Documents, the Contractor shall defend and indemnify the Owner from all loss, liability, damage or expense, including reasonable attorney's fees and litigation expenses, arising out of any lien claim or other claim for payment by any Subcontractor or supplier of any tier. Upon receipt of notice of a lien claim or other claim for payment, the Owner shall notify the Contractor. If approved by the applicable court, when required, the Contractor may substitute a surety bond for the property against which the lien or other claim for payment has been asserted.

§ 9.7 Failure of Payment

If the Architect does not issue a Certificate for Payment, through no fault of the Contractor, within seven days after receipt of the Contractor's Application for Payment, or if the Owner does not pay the Contractor within seven days after the date established in the Contract Documents, the amount certified by the Architect or awarded by binding dispute resolution, then the Contractor may, upon seven additional days' notice to the Owner and Architect, stop the Work until payment of the amount owing has been received. The Contract Time shall be extended appropriately and the Contract Sum shall be increased by the amount of the Contractor's reasonable costs of shutdown, delay and start-up, plus interest as provided for in the Contract Documents.

§ 9.8 Substantial Completion

§ 9.8.1 Substantial Completion is the stage in the progress of the Work when the Work or designated portion thereof is sufficiently complete in accordance with the Contract Documents so that the Owner can occupy or utilize the Work for its intended use.

§ 9.8.2 When the Contractor considers that the Work, or a portion thereof which the Owner agrees to accept separately, is substantially complete, the Contractor shall prepare and submit to the Architect a comprehensive list of items to be completed or corrected prior to final payment. Failure to include an item on such list does not alter the responsibility of the Contractor to complete all Work in accordance with the Contract Documents.

§ 9.8.3 Upon receipt of the Contractor's list, the Architect will make an inspection to determine whether the Work or designated portion thereof is substantially complete. If the Architect's inspection discloses any item, whether or not included on the Contractor's list, which is not sufficiently complete in accordance with the Contract Documents so that the Owner can occupy or utilize the Work or designated portion thereof for its intended use, the Contractor shall, before issuance of the Certificate of Substantial Completion, complete or correct such item upon notification by the Architect. In such case, the Contractor shall then submit a request for another inspection by the Architect to determine Substantial Completion.

§ 9.8.4 When the Work or designated portion thereof is substantially complete, the Architect will prepare a Certificate of Substantial Completion that shall establish the date of Substantial Completion; establish responsibilities of the Owner and Contractor for security, maintenance, heat, utilities, damage to the Work and insurance; and fix the time within which the Contractor shall finish all items on the list accompanying the Certificate. Warranties required by the Contract Documents shall commence on the date of Substantial Completion of the Work or designated portion thereof unless otherwise provided in the Certificate of Substantial Completion.

§ 9.8.5 The Certificate of Substantial Completion shall be submitted to the Owner and Contractor for their written acceptance of responsibilities assigned to them in the Certificate. Upon such acceptance, and consent of surety if any, the Owner shall make payment of retainage applying to the Work or designated portion thereof. Such payment shall be adjusted for Work that is incomplete or not in accordance with the requirements of the Contract Documents.

§ 9.9 Partial Occupancy or Use

§ 9.9.1 The Owner may occupy or use any completed or partially completed portion of the Work at any stage when such portion is designated by separate agreement with the Contractor, provided such occupancy or use is consented to by the insurer and authorized by public authorities having jurisdiction over the Project. Such partial occupancy or use may commence whether or not the portion is substantially complete, provided the Owner and Contractor have accepted in writing the responsibilities assigned to each of them for payments, retainage, if any, security, maintenance, heat, utilities, damage to the Work and insurance, and have agreed in writing concerning the period for correction of the Work and commencement of warranties required by the Contract Documents. When the Contractor considers a portion substantially complete, the Contractor shall prepare and submit a list to the Architect as provided under Section 9.8.2. Consent of the Contractor to partial occupancy or use shall not be unreasonably withheld. The stage of the progress of the Work shall be determined by written agreement between the Owner and Contractor or, if no agreement is reached, by decision of the Architect.

§ 9.9.2 Immediately prior to such partial occupancy or use, the Owner, Contractor, and Architect shall jointly inspect the area to be occupied or portion of the Work to be used in order to determine and record the condition of the Work.

§ 9.9.3 Unless otherwise agreed upon, partial occupancy or use of a portion or portions of the Work shall not constitute acceptance of Work not complying with the requirements of the Contract Documents.

§ 9.10 Final Completion and Final Payment

§ 9.10.1 Upon receipt of the Contractor's notice that the Work is ready for final inspection and acceptance and upon receipt of a final Application for Payment, the Architect will promptly make such inspection. When the Architect finds the Work acceptable under the Contract Documents and the Contract fully performed, the Architect will promptly issue a final Certificate for Payment stating that to the best of the Architect's knowledge, information and belief, and on the basis of the Architect's on-site visits and inspections, the Work has been completed in accordance with the Contract Documents and that the entire balance found to be due the Contractor and noted in the final Certificate is due and payable. The Architect's final Certificate for Payment will constitute a further representation that conditions listed in Section 9.10.2 as precedent to the Contractor's being entitled to final payment have been fulfilled.

§ 9.10.2 Neither final payment nor any remaining retained percentage shall become due until the Contractor submits to the Architect (1) an affidavit that payrolls, bills for materials and equipment, and other indebtedness connected with the Work for which the Owner or the Owner's property might be responsible or encumbered (less amounts withheld by Owner) have been paid or otherwise satisfied, (2) a certificate evidencing that insurance required by the Contract Documents to remain in force after final payment is currently in effect, (3) a written statement that the Contractor knows of no reason that the insurance will not be renewable to cover the period required by the Contract Documents, (4) consent of surety, if any, to final payment, (5) documentation of any special warranties, such as manufacturers' warranties or specific Subcontractor warranties, and (6) if required by the Owner, other data establishing payment or satisfaction of obligations, such as receipts and releases and waivers of liens, claims, security interests, or encumbrances arising out of the Contract, to the extent and in such form as may be designated by the Owner. If a Subcontractor refuses to furnish a release or waiver required by the Owner, the Contractor may furnish a bond satisfactory to the Owner to indemnify the Owner against such lien, claim, security interest, or encumbrance. If a lien, claim, security interest, or encumbrance remains unsatisfied after payments are made, the Contractor shall refund to the Owner all money that the Owner may be compelled to pay in discharging the lien, claim, security interest, or encumbrance, including all costs and reasonable attorneys' fees.

§ 9.10.3 If, after Substantial Completion of the Work, final completion thereof is materially delayed through no fault of the Contractor or by issuance of Change Orders affecting final completion, and the Architect so confirms, the Owner shall, upon application by the Contractor and certification by the Architect, and without terminating the Contract, make payment of the balance due for that portion of the Work fully completed, corrected, and accepted. If the remaining balance for Work not fully completed or corrected is less than retainage stipulated in the Contract Documents, and if bonds have been furnished, the written consent of the surety to payment of the balance due for that portion of the Work fully completed and accepted shall be submitted by the Contractor to the Architect prior to certification of such payment. Such payment shall be made under terms and conditions governing final payment, except that it shall not constitute a waiver of Claims.

§ 9.10.4 The making of final payment shall constitute a waiver of Claims by the Owner except those arising from

- **.1** liens, Claims, security interests, or encumbrances arising out of the Contract and unsettled;
- **.2** failure of the Work to comply with the requirements of the Contract Documents;
- **.3** terms of special warranties required by the Contract Documents; or
- **.4** audits performed by the Owner, if permitted by the Contract Documents, after final payment.

§ 9.10.5 Acceptance of final payment by the Contractor, a Subcontractor, or a supplier, shall constitute a waiver of claims by that payee except those previously made in writing and identified by that payee as unsettled at the time of final Application for Payment.

ARTICLE 10 PROTECTION OF PERSONS AND PROPERTY

§ 10.1 Safety Precautions and Programs

The Contractor shall be responsible for initiating, maintaining, and supervising all safety precautions and programs in connection with the performance of the Contract.

§ 10.2 Safety of Persons and Property

§ 10.2.1 The Contractor shall take reasonable precautions for safety of, and shall provide reasonable protection to prevent damage, injury, or loss to

.1 employees on the Work and other persons who may be affected thereby;
.2 the Work and materials and equipment to be incorporated therein, whether in storage on or off the site, under care, custody, or control of the Contractor, a Subcontractor, or a Sub-subcontractor; and
.3 other property at the site or adjacent thereto, such as trees, shrubs, lawns, walks, pavements, roadways, structures, and utilities not designated for removal, relocation, or replacement in the course of construction.

§ 10.2.2 The Contractor shall comply with, and give notices required by applicable laws, statutes, ordinances, codes, rules and regulations, and lawful orders of public authorities, bearing on safety of persons or property or their protection from damage, injury, or loss.

§ 10.2.3 The Contractor shall implement, erect, and maintain, as required by existing conditions and performance of the Contract, reasonable safeguards for safety and protection, including posting danger signs and other warnings against hazards; promulgating safety regulations; and notifying the owners and users of adjacent sites and utilities of the safeguards.

§ 10.2.4 When use or storage of explosives or other hazardous materials or equipment, or unusual methods are necessary for execution of the Work, the Contractor shall exercise utmost care and carry on such activities under supervision of properly qualified personnel.

§ 10.2.5 The Contractor shall promptly remedy damage and loss (other than damage or loss insured under property insurance required by the Contract Documents) to property referred to in Sections 10.2.1.2 and 10.2.1.3 caused in whole or in part by the Contractor, a Subcontractor, a Sub-subcontractor, or anyone directly or indirectly employed by any of them, or by anyone for whose acts they may be liable and for which the Contractor is responsible under Sections 10.2.1.2 and 10.2.1.3. The Contractor may make a Claim for the cost to remedy the damage or loss to the extent such damage or loss is attributable to acts or omissions of the Owner or Architect or anyone directly or indirectly employed by either of them, or by anyone for whose acts either of them may be liable, and not attributable to the fault or negligence of the Contractor. The foregoing obligations of the Contractor are in addition to the Contractor's obligations under Section 3.18.

§ 10.2.6 The Contractor shall designate a responsible member of the Contractor's organization at the site whose duty shall be the prevention of accidents. This person shall be the Contractor's superintendent unless otherwise designated by the Contractor in writing to the Owner and Architect.

§ 10.2.7 The Contractor shall not permit any part of the construction or site to be loaded so as to cause damage or create an unsafe condition.

§ 10.2.8 Injury or Damage to Person or Property
If either party suffers injury or damage to person or property because of an act or omission of the other party, or of others for whose acts such party is legally responsible, notice of the injury or damage, whether or not insured, shall be given to the other party within a reasonable time not exceeding 21 days after discovery. The notice shall provide sufficient detail to enable the other party to investigate the matter.

§ 10.3 Hazardous Materials and Substances
§ 10.3.1 The Contractor is responsible for compliance with any requirements included in the Contract Documents regarding hazardous materials or substances. If the Contractor encounters a hazardous material or substance not addressed in the Contract Documents and if reasonable precautions will be inadequate to prevent foreseeable bodily injury or death to persons resulting from a material or substance, including but not limited to asbestos or polychlorinated biphenyl (PCB), encountered on the site by the Contractor, the Contractor shall, upon recognizing the condition, immediately stop Work in the affected area and notify the Owner and Architect of the condition.

§ 10.3.2 Upon receipt of the Contractor's notice, the Owner shall obtain the services of a licensed laboratory to verify the presence or absence of the material or substance reported by the Contractor and, in the event such material or substance is found to be present, to cause it to be rendered harmless. Unless otherwise required by the Contract Documents, the Owner shall furnish in writing to the Contractor and Architect the names and qualifications of persons or entities who are to perform tests verifying the presence or absence of the material or substance or who are to perform the task of removal or safe containment of the material or substance. The Contractor and the Architect will

promptly reply to the Owner in writing stating whether or not either has reasonable objection to the persons or entities proposed by the Owner. If either the Contractor or Architect has an objection to a person or entity proposed by the Owner, the Owner shall propose another to whom the Contractor and the Architect have no reasonable objection. When the material or substance has been rendered harmless, Work in the affected area shall resume upon written agreement of the Owner and Contractor. By Change Order, the Contract Time shall be extended appropriately and the Contract Sum shall be increased by the amount of the Contractor's reasonable additional costs of shutdown, delay, and start-up.

§ 10.3.3 To the fullest extent permitted by law, the Owner shall indemnify and hold harmless the Contractor, Subcontractors, Architect, Architect's consultants, and agents and employees of any of them from and against claims, damages, losses, and expenses, including but not limited to attorneys' fees, arising out of or resulting from performance of the Work in the affected area if in fact the material or substance presents the risk of bodily injury or death as described in Section 10.3.1 and has not been rendered harmless, provided that such claim, damage, loss, or expense is attributable to bodily injury, sickness, disease or death, or to injury to or destruction of tangible property (other than the Work itself), except to the extent that such damage, loss, or expense is due to the fault or negligence of the party seeking indemnity.

§ 10.3.4 The Owner shall not be responsible under this Section 10.3 for hazardous materials or substances the Contractor brings to the site unless such materials or substances are required by the Contract Documents. The Owner shall be responsible for hazardous materials or substances required by the Contract Documents, except to the extent of the Contractor's fault or negligence in the use and handling of such materials or substances.

§ 10.3.5 The Contractor shall reimburse the Owner for the cost and expense the Owner incurs (1) for remediation of hazardous materials or substances the Contractor brings to the site and negligently handles, or (2) where the Contractor fails to perform its obligations under Section 10.3.1, except to the extent that the cost and expense are due to the Owner's fault or negligence.

§ 10.3.6 If, without negligence on the part of the Contractor, the Contractor is held liable by a government agency for the cost of remediation of a hazardous material or substance solely by reason of performing Work as required by the Contract Documents, the Owner shall reimburse the Contractor for all cost and expense thereby incurred.

§ 10.4 Emergencies

In an emergency affecting safety of persons or property, the Contractor shall act, at the Contractor's discretion, to prevent threatened damage, injury, or loss. Additional compensation or extension of time claimed by the Contractor on account of an emergency shall be determined as provided in Article 15 and Article 7.

ARTICLE 11 INSURANCE AND BONDS

§ 11.1 Contractor's Insurance and Bonds

§ 11.1.1 The Contractor shall purchase and maintain insurance of the types and limits of liability, containing the endorsements, and subject to the terms and conditions, as described in the Agreement or elsewhere in the Contract Documents. The Contractor shall purchase and maintain the required insurance from an insurance company or insurance companies lawfully authorized to issue insurance in the jurisdiction where the Project is located. The Owner, Architect, and Architect's consultants shall be named as additional insureds under the Contractor's commercial general liability policy or as otherwise described in the Contract Documents.

§ 11.1.2 The Contractor shall provide surety bonds of the types, for such penal sums, and subject to such terms and conditions as required by the Contract Documents. The Contractor shall purchase and maintain the required bonds from a company or companies lawfully authorized to issue surety bonds in the jurisdiction where the Project is located.

§ 11.1.3 Upon the request of any person or entity appearing to be a potential beneficiary of bonds covering payment of obligations arising under the Contract, the Contractor shall promptly furnish a copy of the bonds or shall authorize a copy to be furnished.

§ 11.1.4 Notice of Cancellation or Expiration of Contractor's Required Insurance. Within three (3) business days of the date the Contractor becomes aware of an impending or actual cancellation or expiration of any insurance required by the Contract Documents, the Contractor shall provide notice to the Owner of such impending or actual cancellation or expiration. Upon receipt of notice from the Contractor, the Owner shall, unless the lapse in coverage arises from an act

or omission of the Owner, have the right to stop the Work until the lapse in coverage has been cured by the procurement of replacement coverage by the Contractor. The furnishing of notice by the Contractor shall not relieve the Contractor of any contractual obligation to provide any required coverage.

§ 11.2 Owner's Insurance

§ 11.2.1 The Owner shall purchase and maintain insurance of the types and limits of liability, containing the endorsements, and subject to the terms and conditions, as described in the Agreement or elsewhere in the Contract Documents. The Owner shall purchase and maintain the required insurance from an insurance company or insurance companies lawfully authorized to issue insurance in the jurisdiction where the Project is located.

§ 11.2.2 Failure to Purchase Required Property Insurance. If the Owner fails to purchase and maintain the required property insurance, with all of the coverages and in the amounts described in the Agreement or elsewhere in the Contract Documents, the Owner shall inform the Contractor in writing prior to commencement of the Work. Upon receipt of notice from the Owner, the Contractor may delay commencement of the Work and may obtain insurance that will protect the interests of the Contractor, Subcontractors, and Sub-Subcontractors in the Work. When the failure to provide coverage has been cured or resolved, the Contract Sum and Contract Time shall be equitably adjusted. In the event the Owner fails to procure coverage, the Owner waives all rights against the Contractor, Subcontractors, and Sub-subcontractors to the extent the loss to the Owner would have been covered by the insurance to have been procured by the Owner. The cost of the insurance shall be charged to the Owner by a Change Order. If the Owner does not provide written notice, and the Contractor is damaged by the failure or neglect of the Owner to purchase or maintain the required insurance, the Owner shall reimburse the Contractor for all reasonable costs and damages attributable thereto.

§ 11.2.3 Notice of Cancellation or Expiration of Owner's Required Property Insurance. Within three (3) business days of the date the Owner becomes aware of an impending or actual cancellation or expiration of any property insurance required by the Contract Documents, the Owner shall provide notice to the Contractor of such impending or actual cancellation or expiration. Unless the lapse in coverage arises from an act or omission of the Contractor: (1) the Contractor, upon receipt of notice from the Owner, shall have the right to stop the Work until the lapse in coverage has been cured by the procurement of replacement coverage by either the Owner or the Contractor; (2) the Contract Time and Contract Sum shall be equitably adjusted; and (3) the Owner waives all rights against the Contractor, Subcontractors, and Sub-subcontractors to the extent any loss to the Owner would have been covered by the insurance had it not expired or been cancelled. If the Contractor purchases replacement coverage, the cost of the insurance shall be charged to the Owner by an appropriate Change Order. The furnishing of notice by the Owner shall not relieve the Owner of any contractual obligation to provide required insurance.

§ 11.3 Waivers of Subrogation

§ 11.3.1 The Owner and Contractor waive all rights against (1) each other and any of their subcontractors, sub-subcontractors, agents, and employees, each of the other; (2) the Architect and Architect's consultants; and (3) Separate Contractors, if any, and any of their subcontractors, sub-subcontractors, agents, and employees, for damages caused by fire, or other causes of loss, to the extent those losses are covered by property insurance required by the Agreement or other property insurance applicable to the Project, except such rights as they have to proceeds of such insurance. The Owner or Contractor, as appropriate, shall require similar written waivers in favor of the individuals and entities identified above from the Architect, Architect's consultants, Separate Contractors, subcontractors, and sub-subcontractors. The policies of insurance purchased and maintained by each person or entity agreeing to waive claims pursuant to this section 11.3.1 shall not prohibit this waiver of subrogation. This waiver of subrogation shall be effective as to a person or entity (1) even though that person or entity would otherwise have a duty of indemnification, contractual or otherwise, (2) even though that person or entity did not pay the insurance premium directly or indirectly, or (3) whether or not the person or entity had an insurable interest in the damaged property.

§ 11.3.2 If during the Project construction period the Owner insures properties, real or personal or both, at or adjacent to the site by property insurance under policies separate from those insuring the Project, or if after final payment property insurance is to be provided on the completed Project through a policy or policies other than those insuring the Project during the construction period, to the extent permissible by such policies, the Owner waives all rights in accordance with the terms of Section 11.3.1 for damages caused by fire or other causes of loss covered by this separate property insurance.

§ 11.4 Loss of Use, Business Interruption, and Delay in Completion Insurance

The Owner, at the Owner's option, may purchase and maintain insurance that will protect the Owner against loss of use of the Owner's property, or the inability to conduct normal operations, due to fire or other causes of loss. The Owner waives all rights of action against the Contractor and Architect for loss of use of the Owner's property, due to fire or other hazards however caused.

§11.5 Adjustment and Settlement of Insured Loss

§ 11.5.1 A loss insured under the property insurance required by the Agreement shall be adjusted by the Owner as fiduciary and made payable to the Owner as fiduciary for the insureds, as their interests may appear, subject to requirements of any applicable mortgagee clause and of Section 11.5.2. The Owner shall pay the Architect and Contractor their just shares of insurance proceeds received by the Owner, and by appropriate agreements the Architect and Contractor shall make payments to their consultants and Subcontractors in similar manner.

§ 11.5.2 Prior to settlement of an insured loss, the Owner shall notify the Contractor of the terms of the proposed settlement as well as the proposed allocation of the insurance proceeds. The Contractor shall have 14 days from receipt of notice to object to the proposed settlement or allocation of the proceeds. If the Contractor does not object, the Owner shall settle the loss and the Contractor shall be bound by the settlement and allocation. Upon receipt, the Owner shall deposit the insurance proceeds in a separate account and make the appropriate distributions. Thereafter, if no other agreement is made or the Owner does not terminate the Contract for convenience, the Owner and Contractor shall execute a Change Order for reconstruction of the damaged or destroyed Work in the amount allocated for that purpose. If the Contractor timely objects to either the terms of the proposed settlement or the allocation of the proceeds, the Owner may proceed to settle the insured loss, and any dispute between the Owner and Contractor arising out of the settlement or allocation of the proceeds shall be resolved pursuant to Article 15. Pending resolution of any dispute, the Owner may issue a Construction Change Directive for the reconstruction of the damaged or destroyed Work.

ARTICLE 12 UNCOVERING AND CORRECTION OF WORK

§ 12.1 Uncovering of Work

§ 12.1.1 If a portion of the Work is covered contrary to the Architect's request or to requirements specifically expressed in the Contract Documents, it must, if requested in writing by the Architect, be uncovered for the Architect's examination and be replaced at the Contractor's expense without change in the Contract Time.

§ 12.1.2 If a portion of the Work has been covered that the Architect has not specifically requested to examine prior to its being covered, the Architect may request to see such Work and it shall be uncovered by the Contractor. If such Work is in accordance with the Contract Documents, the Contractor shall be entitled to an equitable adjustment to the Contract Sum and Contract Time as may be appropriate. If such Work is not in accordance with the Contract Documents, the costs of uncovering the Work, and the cost of correction, shall be at the Contractor's expense.

§ 12.2 Correction of Work

§ 12.2.1 Before Substantial Completion

The Contractor shall promptly correct Work rejected by the Architect or failing to conform to the requirements of the Contract Documents, discovered before Substantial Completion and whether or not fabricated, installed or completed. Costs of correcting such rejected Work, including additional testing and inspections, the cost of uncovering and replacement, and compensation for the Architect's services and expenses made necessary thereby, shall be at the Contractor's expense.

§ 12.2.2 After Substantial Completion

§ 12.2.2.1 In addition to the Contractor's obligations under Section 3.5, if, within one year after the date of Substantial Completion of the Work or designated portion thereof or after the date for commencement of warranties established under Section 9.9.1, or by terms of any applicable special warranty required by the Contract Documents, any of the Work is found to be not in accordance with the requirements of the Contract Documents, the Contractor shall correct it promptly after receipt of notice from the Owner to do so, unless the Owner has previously given the Contractor a written acceptance of such condition. The Owner shall give such notice promptly after discovery of the condition. During the one-year period for correction of Work, if the Owner fails to notify the Contractor and give the Contractor an opportunity to make the correction, the Owner waives the rights to require correction by the Contractor and to make a claim for breach of warranty. If the Contractor fails to correct nonconforming Work within a reasonable time during that period after receipt of notice from the Owner or Architect, the Owner may correct it in accordance with Section 2.5.

§ 12.2.2.2 The one-year period for correction of Work shall be extended with respect to portions of Work first performed after Substantial Completion by the period of time between Substantial Completion and the actual completion of that portion of the Work.

§ 12.2.2.3 The one-year period for correction of Work shall not be extended by corrective Work performed by the Contractor pursuant to this Section 12.2.

§ 12.2.3 The Contractor shall remove from the site portions of the Work that are not in accordance with the requirements of the Contract Documents and are neither corrected by the Contractor nor accepted by the Owner.

§ 12.2.4 The Contractor shall bear the cost of correcting destroyed or damaged construction of the Owner or Separate Contractors, whether completed or partially completed, caused by the Contractor's correction or removal of Work that is not in accordance with the requirements of the Contract Documents.

§ 12.2.5 Nothing contained in this Section 12.2 shall be construed to establish a period of limitation with respect to other obligations the Contractor has under the Contract Documents. Establishment of the one-year period for correction of Work as described in Section 12.2.2 relates only to the specific obligation of the Contractor to correct the Work, and has no relationship to the time within which the obligation to comply with the Contract Documents may be sought to be enforced, nor to the time within which proceedings may be commenced to establish the Contractor's liability with respect to the Contractor's obligations other than specifically to correct the Work.

§ 12.3 Acceptance of Nonconforming Work

If the Owner prefers to accept Work that is not in accordance with the requirements of the Contract Documents, the Owner may do so instead of requiring its removal and correction, in which case the Contract Sum will be reduced as appropriate and equitable. Such adjustment shall be effected whether or not final payment has been made.

ARTICLE 13 MISCELLANEOUS PROVISIONS

§ 13.1 Governing Law

The Contract shall be governed by the law of the place where the Project is located, excluding that jurisdiction's choice of law rules. If the parties have selected arbitration as the method of binding dispute resolution, the Federal Arbitration Act shall govern Section 15.4.

§ 13.2 Successors and Assigns

§ 13.2.1 The Owner and Contractor respectively bind themselves, their partners, successors, assigns, and legal representatives to covenants, agreements, and obligations contained in the Contract Documents. Except as provided in Section 13.2.2, neither party to the Contract shall assign the Contract as a whole without written consent of the other. If either party attempts to make an assignment without such consent, that party shall nevertheless remain legally responsible for all obligations under the Contract.

§ 13.2.2 The Owner may, without consent of the Contractor, assign the Contract to a lender providing construction financing for the Project, if the lender assumes the Owner's rights and obligations under the Contract Documents. The Contractor shall execute all consents reasonably required to facilitate the assignment.

§ 13.3 Rights and Remedies

§ 13.3.1 Duties and obligations imposed by the Contract Documents and rights and remedies available thereunder shall be in addition to and not a limitation of duties, obligations, rights, and remedies otherwise imposed or available by law.

§ 13.3.2 No action or failure to act by the Owner, Architect, or Contractor shall constitute a waiver of a right or duty afforded them under the Contract, nor shall such action or failure to act constitute approval of or acquiescence in a breach thereunder, except as may be specifically agreed upon in writing.

§ 13.4 Tests and Inspections

§ 13.4.1 Tests, inspections, and approvals of portions of the Work shall be made as required by the Contract Documents and by applicable laws, statutes, ordinances, codes, rules, and regulations or lawful orders of public authorities. Unless otherwise provided, the Contractor shall make arrangements for such tests, inspections, and

approvals with an independent testing laboratory or entity acceptable to the Owner, or with the appropriate public authority, and shall bear all related costs of tests, inspections, and approvals. The Contractor shall give the Architect timely notice of when and where tests and inspections are to be made so that the Architect may be present for such procedures. The Owner shall bear costs of tests, inspections, or approvals that do not become requirements until after bids are received or negotiations concluded. The Owner shall directly arrange and pay for tests, inspections, or approvals where building codes or applicable laws or regulations so require.

§ 13.4.2 If the Architect, Owner, or public authorities having jurisdiction determine that portions of the Work require additional testing, inspection, or approval not included under Section 13.4.1, the Architect will, upon written authorization from the Owner, instruct the Contractor to make arrangements for such additional testing, inspection, or approval, by an entity acceptable to the Owner, and the Contractor shall give timely notice to the Architect of when and where tests and inspections are to be made so that the Architect may be present for such procedures. Such costs, except as provided in Section 13.4.3, shall be at the Owner's expense.

§ 13.4.3 If procedures for testing, inspection, or approval under Sections 13.4.1 and 13.4.2 reveal failure of the portions of the Work to comply with requirements established by the Contract Documents, all costs made necessary by such failure, including those of repeated procedures and compensation for the Architect's services and expenses, shall be at the Contractor's expense.

§ 13.4.4 Required certificates of testing, inspection, or approval shall, unless otherwise required by the Contract Documents, be secured by the Contractor and promptly delivered to the Architect.

§ 13.4.5 If the Architect is to observe tests, inspections, or approvals required by the Contract Documents, the Architect will do so promptly and, where practicable, at the normal place of testing.

§ 13.4.6 Tests or inspections conducted pursuant to the Contract Documents shall be made promptly to avoid unreasonable delay in the Work.

§ 13.5 Interest

Payments due and unpaid under the Contract Documents shall bear interest from the date payment is due at the rate the parties agree upon in writing or, in the absence thereof, at the legal rate prevailing from time to time at the place where the Project is located.

ARTICLE 14 TERMINATION OR SUSPENSION OF THE CONTRACT

§ 14.1 Termination by the Contractor

§ 14.1.1 The Contractor may terminate the Contract if the Work is stopped for a period of 30 consecutive days through no act or fault of the Contractor, a Subcontractor, a Sub-subcontractor, their agents or employees, or any other persons or entities performing portions of the Work, for any of the following reasons:

- **.1** Issuance of an order of a court or other public authority having jurisdiction that requires all Work to be stopped;
- **.2** An act of government, such as a declaration of national emergency, that requires all Work to be stopped;
- **.3** Because the Architect has not issued a Certificate for Payment and has not notified the Contractor of the reason for withholding certification as provided in Section 9.4.1, or because the Owner has not made payment on a Certificate for Payment within the time stated in the Contract Documents; or
- **.4** The Owner has failed to furnish to the Contractor reasonable evidence as required by Section 2.2.

§ 14.1.2 The Contractor may terminate the Contract if, through no act or fault of the Contractor, a Subcontractor, a Sub-subcontractor, their agents or employees, or any other persons or entities performing portions of the Work, repeated suspensions, delays, or interruptions of the entire Work by the Owner as described in Section 14.3, constitute in the aggregate more than 100 percent of the total number of days scheduled for completion, or 120 days in any 365-day period, whichever is less.

§ 14.1.3 If one of the reasons described in Section 14.1.1 or 14.1.2 exists, the Contractor may, upon seven days' notice to the Owner and Architect, terminate the Contract and recover from the Owner payment for Work executed, as well as reasonable overhead and profit on Work not executed, and costs incurred by reason of such termination.

§ 14.1.4 If the Work is stopped for a period of 60 consecutive days through no act or fault of the Contractor, a Subcontractor, a Sub-subcontractor, or their agents or employees or any other persons or entities performing portions of the Work because the Owner has repeatedly failed to fulfill the Owner's obligations under the Contract Documents with respect to matters important to the progress of the Work, the Contractor may, upon seven additional days' notice to the Owner and the Architect, terminate the Contract and recover from the Owner as provided in Section 14.1.3.

§ 14.2 Termination by the Owner for Cause

§ 14.2.1 The Owner may terminate the Contract if the Contractor

- **.1** repeatedly refuses or fails to supply enough properly skilled workers or proper materials;
- **.2** fails to make payment to Subcontractors or suppliers in accordance with the respective agreements between the Contractor and the Subcontractors or suppliers;
- **.3** repeatedly disregards applicable laws, statutes, ordinances, codes, rules and regulations, or lawful orders of a public authority; or
- **.4** otherwise is guilty of substantial breach of a provision of the Contract Documents.

§ 14.2.2 When any of the reasons described in Section 14.2.1 exist, and upon certification by the Architect that sufficient cause exists to justify such action, the Owner may, without prejudice to any other rights or remedies of the Owner and after giving the Contractor and the Contractor's surety, if any, seven days' notice, terminate employment of the Contractor and may, subject to any prior rights of the surety:

- **.1** Exclude the Contractor from the site and take possession of all materials, equipment, tools, and construction equipment and machinery thereon owned by the Contractor;
- **.2** Accept assignment of subcontracts pursuant to Section 5.4; and
- **.3** Finish the Work by whatever reasonable method the Owner may deem expedient. Upon written request of the Contractor, the Owner shall furnish to the Contractor a detailed accounting of the costs incurred by the Owner in finishing the Work.

§ 14.2.3 When the Owner terminates the Contract for one of the reasons stated in Section 14.2.1, the Contractor shall not be entitled to receive further payment until the Work is finished.

§ 14.2.4 If the unpaid balance of the Contract Sum exceeds costs of finishing the Work, including compensation for the Architect's services and expenses made necessary thereby, and other damages incurred by the Owner and not expressly waived, such excess shall be paid to the Contractor. If such costs and damages exceed the unpaid balance, the Contractor shall pay the difference to the Owner. The amount to be paid to the Contractor or Owner, as the case may be, shall be certified by the Initial Decision Maker, upon application, and this obligation for payment shall survive termination of the Contract.

§ 14.3 Suspension by the Owner for Convenience

§ 14.3.1 The Owner may, without cause, order the Contractor in writing to suspend, delay or interrupt the Work, in whole or in part for such period of time as the Owner may determine.

§ 14.3.2 The Contract Sum and Contract Time shall be adjusted for increases in the cost and time caused by suspension, delay, or interruption under Section 14.3.1. Adjustment of the Contract Sum shall include profit. No adjustment shall be made to the extent

- **.1** that performance is, was, or would have been, so suspended, delayed, or interrupted, by another cause for which the Contractor is responsible; or
- **.2** that an equitable adjustment is made or denied under another provision of the Contract.

§ 14.4 Termination by the Owner for Convenience

§ 14.4.1 The Owner may, at any time, terminate the Contract for the Owner's convenience and without cause.

§ 14.4.2 Upon receipt of notice from the Owner of such termination for the Owner's convenience, the Contractor shall

- **.1** cease operations as directed by the Owner in the notice;
- **.2** take actions necessary, or that the Owner may direct, for the protection and preservation of the Work; and
- **.3** except for Work directed to be performed prior to the effective date of termination stated in the notice, terminate all existing subcontracts and purchase orders and enter into no further subcontracts and purchase orders.

§ 14.4.3 In case of such termination for the Owner's convenience, the Owner shall pay the Contractor for Work properly executed; costs incurred by reason of the termination, including costs attributable to termination of Subcontracts; and the termination fee, if any, set forth in the Agreement.

ARTICLE 15 CLAIMS AND DISPUTES

§ 15.1 Claims

§ 15.1.1 Definition

A Claim is a demand or assertion by one of the parties seeking, as a matter of right, payment of money, a change in the Contract Time, or other relief with respect to the terms of the Contract. The term "Claim" also includes other disputes and matters in question between the Owner and Contractor arising out of or relating to the Contract. The responsibility to substantiate Claims shall rest with the party making the Claim. This Section 15.1.1 does not require the Owner to file a Claim in order to impose liquidated damages in accordance with the Contract Documents.

§ 15.1.2 Time Limits on Claims

The Owner and Contractor shall commence all Claims and causes of action against the other and arising out of or related to the Contract, whether in contract, tort, breach of warranty or otherwise, in accordance with the requirements of the binding dispute resolution method selected in the Agreement and within the period specified by applicable law, but in any case not more than 10 years after the date of Substantial Completion of the Work. The Owner and Contractor waive all Claims and causes of action not commenced in accordance with this Section 15.1.2.

§ 15.1.3 Notice of Claims

§ 15.1.3.1 Claims by either the Owner or Contractor, where the condition giving rise to the Claim is first discovered prior to expiration of the period for correction of the Work set forth in Section 12.2.2, shall be initiated by notice to the other party and to the Initial Decision Maker with a copy sent to the Architect, if the Architect is not serving as the Initial Decision Maker. Claims by either party under this Section 15.1.3.1 shall be initiated within 21 days after occurrence of the event giving rise to such Claim or within 21 days after the claimant first recognizes the condition giving rise to the Claim, whichever is later.

§ 15.1.3.2 Claims by either the Owner or Contractor, where the condition giving rise to the Claim is first discovered after expiration of the period for correction of the Work set forth in Section 12.2.2, shall be initiated by notice to the other party. In such event, no decision by the Initial Decision Maker is required.

§ 15.1.4 Continuing Contract Performance

§ 15.1.4.1 Pending final resolution of a Claim, except as otherwise agreed in writing or as provided in Section 9.7 and Article 14, the Contractor shall proceed diligently with performance of the Contract and the Owner shall continue to make payments in accordance with the Contract Documents.

§ 15.1.4.2 The Contract Sum and Contract Time shall be adjusted in accordance with the Initial Decision Maker's decision, subject to the right of either party to proceed in accordance with this Article 15. The Architect will issue Certificates for Payment in accordance with the decision of the Initial Decision Maker.

§ 15.1.5 Claims for Additional Cost

If the Contractor wishes to make a Claim for an increase in the Contract Sum, notice as provided in Section 15.1.3 shall be given before proceeding to execute the portion of the Work that is the subject of the Claim. Prior notice is not required for Claims relating to an emergency endangering life or property arising under Section 10.4.

§ 15.1.6 Claims for Additional Time

§ 15.1.6.1 If the Contractor wishes to make a Claim for an increase in the Contract Time, notice as provided in Section 15.1.3 shall be given. The Contractor's Claim shall include an estimate of cost and of probable effect of delay on progress of the Work. In the case of a continuing delay, only one Claim is necessary.

§ 15.1.6.2 If adverse weather conditions are the basis for a Claim for additional time, such Claim shall be documented by data substantiating that weather conditions were abnormal for the period of time, could not have been reasonably anticipated, and had an adverse effect on the scheduled construction.

§ 15.1.7 Waiver of Claims for Consequential Damages
The Contractor and Owner waive Claims against each other for consequential damages arising out of or relating to this Contract. This mutual waiver includes

.1 damages incurred by the Owner for rental expenses, for losses of use, income, profit, financing, business and reputation, and for loss of management or employee productivity or of the services of such persons; and

.2 damages incurred by the Contractor for principal office expenses including the compensation of personnel stationed there, for losses of financing, business and reputation, and for loss of profit, except anticipated profit arising directly from the Work.

This mutual waiver is applicable, without limitation, to all consequential damages due to either party's termination in accordance with Article 14. Nothing contained in this Section 15.1.7 shall be deemed to preclude assessment of liquidated damages, when applicable, in accordance with the requirements of the Contract Documents.

§ 15.2 Initial Decision
§ 15.2.1 Claims, excluding those where the condition giving rise to the Claim is first discovered after expiration of the period for correction of the Work set forth in Section 12.2.2 or arising under Sections 10.3, 10.4, and 11.5, shall be referred to the Initial Decision Maker for initial decision. The Architect will serve as the Initial Decision Maker, unless otherwise indicated in the Agreement. Except for those Claims excluded by this Section 15.2.1, an initial decision shall be required as a condition precedent to mediation of any Claim. If an initial decision has not been rendered within 30 days after the Claim has been referred to the Initial Decision Maker, the party asserting the Claim may demand mediation and binding dispute resolution without a decision having been rendered. Unless the Initial Decision Maker and all affected parties agree, the Initial Decision Maker will not decide disputes between the Contractor and persons or entities other than the Owner.

§ 15.2.2 The Initial Decision Maker will review Claims and within ten days of the receipt of a Claim take one or more of the following actions: (1) request additional supporting data from the claimant or a response with supporting data from the other party, (2) reject the Claim in whole or in part, (3) approve the Claim, (4) suggest a compromise, or (5) advise the parties that the Initial Decision Maker is unable to resolve the Claim if the Initial Decision Maker lacks sufficient information to evaluate the merits of the Claim or if the Initial Decision Maker concludes that, in the Initial Decision Maker's sole discretion, it would be inappropriate for the Initial Decision Maker to resolve the Claim.

§ 15.2.3 In evaluating Claims, the Initial Decision Maker may, but shall not be obligated to, consult with or seek information from either party or from persons with special knowledge or expertise who may assist the Initial Decision Maker in rendering a decision. The Initial Decision Maker may request the Owner to authorize retention of such persons at the Owner's expense.

§ 15.2.4 If the Initial Decision Maker requests a party to provide a response to a Claim or to furnish additional supporting data, such party shall respond, within ten days after receipt of the request, and shall either (1) provide a response on the requested supporting data, (2) advise the Initial Decision Maker when the response or supporting data will be furnished, or (3) advise the Initial Decision Maker that no supporting data will be furnished. Upon receipt of the response or supporting data, if any, the Initial Decision Maker will either reject or approve the Claim in whole or in part.

§ 15.2.5 The Initial Decision Maker will render an initial decision approving or rejecting the Claim, or indicating that the Initial Decision Maker is unable to resolve the Claim. This initial decision shall (1) be in writing; (2) state the reasons therefor; and (3) notify the parties and the Architect, if the Architect is not serving as the Initial Decision Maker, of any change in the Contract Sum or Contract Time or both. The initial decision shall be final and binding on the parties but subject to mediation and, if the parties fail to resolve their dispute through mediation, to binding dispute resolution.

§ 15.2.6 Either party may file for mediation of an initial decision at any time, subject to the terms of Section 15.2.6.1.

§ 15.2.6.1 Either party may, within 30 days from the date of receipt of an initial decision, demand in writing that the other party file for mediation. If such a demand is made and the party receiving the demand fails to file for mediation within 30 days after receipt thereof, then both parties waive their rights to mediate or pursue binding dispute resolution proceedings with respect to the initial decision.

§ 15.2.7 In the event of a Claim against the Contractor, the Owner may, but is not obligated to, notify the surety, if any, of the nature and amount of the Claim. If the Claim relates to a possibility of a Contractor's default, the Owner may, but is not obligated to, notify the surety and request the surety's assistance in resolving the controversy.

§ 15.2.8 If a Claim relates to or is the subject of a mechanic's lien, the party asserting such Claim may proceed in accordance with applicable law to comply with the lien notice or filing deadlines.

§ 15.3 Mediation

§ 15.3.1 Claims, disputes, or other matters in controversy arising out of or related to the Contract, except those waived as provided for in Sections 9.10.4, 9.10.5, and 15.1.7, shall be subject to mediation as a condition precedent to binding dispute resolution.

§ 15.3.2 The parties shall endeavor to resolve their Claims by mediation which, unless the parties mutually agree otherwise, shall be administered by the American Arbitration Association in accordance with its Construction Industry Mediation Procedures in effect on the date of the Agreement. A request for mediation shall be made in writing, delivered to the other party to the Contract, and filed with the person or entity administering the mediation. The request may be made concurrently with the filing of binding dispute resolution proceedings but, in such event, mediation shall proceed in advance of binding dispute resolution proceedings, which shall be stayed pending mediation for a period of 60 days from the date of filing, unless stayed for a longer period by agreement of the parties or court order.

§ 15.3.3 Either party may, within 30 days from the date that mediation has been concluded without resolution of the dispute or 60 days after mediation has been demanded without resolution of the dispute, demand in writing that the other party file for binding dispute resolution. If such a demand is made and the party receiving the demand fails to file for binding dispute resolution within 60 days after receipt thereof, then both parties waive their rights to binding dispute resolution proceedings with respect to the initial decision.

§ 15.3.4 The parties shall share the mediator's fee and any filing fees equally. The mediation shall be held in the place where the Project is located, unless another location is mutually agreed upon. Agreements reached in mediation shall be enforceable as settlement agreements in any court having jurisdiction thereof.

(Paragraphs deleted)

Additions and Deletions Report for

AIA® Document A201® – 2017

This Additions and Deletions Report, as defined on page 1 of the associated document, reproduces below all text the author has added to the standard form AIA document in order to complete it, as well as any text the author may have added to or deleted from the original AIA text. Added text is shown underlined. Deleted text is indicated with a horizontal line through the original AIA text.

Note: This Additions and Deletions Report is provided for information purposes only and is not incorporated into or constitute any part of the associated AIA document. This Additions and Deletions Report and its associated document were generated simultaneously by AIA software at 10:01:36 ET on 07/26/2022.

PAGE 1

Magnolia Oaks Affordable Housing Project
7240 and 7388 Massachusetts Avenue
New Port Richey, Florida

...

Pasco County Housing Authority
13931 7th Street
Dade City, Florida 33525

...

Goodwyn Mills Cawood, LLC
201 North Franklin Street, Suite 250
Tampa, Florida 33602

PAGE 39

§ 15.3.2 The parties shall endeavor to resolve their Claims by mediation which, unless the parties mutually agree otherwise, shall be administered by the American Arbitration Association in accordance with its Construction Industry Mediation Procedures in effect on the date of the Agreement. A request for mediation shall be made in writing, delivered to the other party to the Contract, and filed with the person or entity administering the mediation. The request may be made concurrently with the filing of binding dispute resolution proceedings but, in such event, mediation shall proceed in advance of binding dispute resolution proceedings, which shall be stayed pending mediation for a period of 60 days from the date of filing, unless stayed for a longer period by agreement of the parties or court order. ~~If an arbitration is stayed pursuant to this Section 15.3.2, the parties may nonetheless proceed to the selection of the arbitrator(s) and agree upon a schedule for later proceedings.~~

...

~~**§ 15.4 Arbitration**~~

~~**§ 15.4.1** If the parties have selected arbitration as the method for binding dispute resolution in the Agreement, any Claim subject to, but not resolved by, mediation shall be subject to arbitration which, unless the parties mutually agree otherwise, shall be administered by the American Arbitration Association in accordance with its Construction Industry Arbitration Rules in effect on the date of the Agreement. The Arbitration shall be conducted in the place where the Project is located, unless another location is mutually agreed upon. A demand for arbitration shall be made in writing, delivered to the other party to the Contract, and filed with the person or entity administering the arbitration. The party filing a notice of demand for arbitration must assert in the demand all Claims then known to that party on which arbitration is permitted to be demanded.~~

~~§ 15.4.1.1 A demand for arbitration shall be made no earlier than concurrently with the filing of a request for mediation, but in no event shall it be made after the date when the institution of legal or equitable proceedings based on the Claim would be barred by the applicable statute of limitations. For statute of limitations purposes, receipt of a written demand for arbitration by the person or entity administering the arbitration shall constitute the institution of legal or equitable proceedings based on the Claim.~~

~~§ 15.4.2 The award rendered by the arbitrator or arbitrators shall be final, and judgment may be entered upon it in accordance with applicable law in any court having jurisdiction thereof.~~

~~§ 15.4.3 The foregoing agreement to arbitrate and other agreements to arbitrate with an additional person or entity duly consented to by parties to the Agreement, shall be specifically enforceable under applicable law in any court having jurisdiction thereof.~~

~~**§ 15.4.4 Consolidation or Joinder**~~

~~§ 15.4.4.1 Subject to the rules of the American Arbitration Association or other applicable arbitration rules, either party may consolidate an arbitration conducted under this Agreement with any other arbitration to which it is a party provided that (1) the arbitration agreement governing the other arbitration permits consolidation, (2) the arbitrations to be consolidated substantially involve common questions of law or fact, and (3) the arbitrations employ materially similar procedural rules and methods for selecting arbitrator(s).~~

~~§ 15.4.4.2 Subject to the rules of the American Arbitration Association or other applicable arbitration rules, either party may include by joinder persons or entities substantially involved in a common question of law or fact whose presence is required if complete relief is to be accorded in arbitration, provided that the party sought to be joined consents in writing to such joinder. Consent to arbitration involving an additional person or entity shall not constitute consent to arbitration of any claim, dispute or other matter in question not described in the written consent.~~

~~§ 15.4.4.3 The Owner and Contractor grant to any person or entity made a party to an arbitration conducted under this Section 15.4, whether by joinder or consolidation, the same rights of joinder and consolidation as those of the Owner and Contractor under this Agreement.~~

Certification of Document's Authenticity

AIA® Document D401™ – 2003

I, , hereby certify, to the best of my knowledge, information and belief, that I created the attached final document simultaneously with its associated Additions and Deletions Report and this certification at 10:01:36 ET on 07/26/2022 under Order No. 2114289139 from AIA Contract Documents software and that in preparing the attached final document I made no changes to the original text of AIA® Document A201™ – 2017, General Conditions of the Contract for Construction, as published by the AIA in its software, other than those additions and deletions shown in the associated Additions and Deletions Report.

_____

(Signed)

_____

(Title)

_____

(Dated)

SECTION 007300 - SUPPLEMENTARY CONDITIONS

1.1 SUPPLEMENTARY CONDITIONS

A. Form HUD-92554M “Supplementary Conditions to the Construction Contract” attached to the end of this Section takes precedence over the following form of the General Conditions to be used for Project:

1. AIA Document A201-2017 "General Conditions of the Contract for Construction” specified in Section 007200 “General Conditions.”

PART 2 - PRODUCTS (Not Used)

PART 3 - EXECUTION (Not Used)

END OF SECTION 007200

SUPPLEMENTARY CONDITIONS TO THE CONSTRUCTION CONTRACT

U.S. Department of Housing and Urban Development
Office of Housing

OMB Approval No. 2502-0598
(Exp. 9/30/2021)

Article 1: Labor Standards

A. **Applicability.** The Project or program to which the construction work covered by this Contract pertains is being assisted or insured by the United States of America, and the following Federal Labor Standards Provisions are included in this Contract or related instrument pursuant to the provisions applicable to such Federal assistance or insurance. Any statute or regulation contained herein shall also include any subsequent amendment or successor statute or regulation. The terms of this Supplementary Conditions to the Construction Contract (HUD-92554M) takes precedence over all provisions of the "General Conditions of the Contract for Construction" (AIA Document A201) inconsistent with said Supplementary Conditions.

B. **Minimum Wages.** Pursuant to Section 212 of the National Housing Act, as amended, 12 U.S.C. 1715c, the minimum wage provisions contained in this paragraph B do not apply to those projects with Security Instruments insured under Section 221(h)(1) designed for less than 9 families and they do not apply to those projects with Security Instruments insured under either Section 220 or 233 designed for less than 12 families.

1. (i) All laborers and mechanics employed or working upon the site of the work (or under the United States Housing Act of 1937 or under the Housing Act of 1949 in the construction or development of the Project) shall be paid unconditionally and not less often than once a week, and without subsequent deduction or rebate on any account (except such payroll deductions as are permitted by regulations issued by the Secretary of Labor under the Copeland Act (29 CFR Part 3)), the full amount of wages and bona fide fringe benefits (or cash equivalents thereof) due at time of payment computed at rates not less than those contained in the wage determination of the Secretary of Labor which is attached hereto and made a part hereof, regardless of any contractual relationship which may be alleged to exist between the Contractor and such laborers and mechanics. Contributions made or costs reasonably anticipated for bona fide fringe benefits under Section 1 (b)(2) of the Davis-Bacon Act (40 U.S.C. 3141(2)(B)(ii)) on behalf of laborers or mechanics are considered wages paid to such laborers or

mechanics, subject to the provisions of 29 CFR 5.5(a)(1)(iv); also, regular contributions made or costs incurred for more than a weekly period (but not less often than quarterly) under plans, funds, or programs, which cover the particular weekly period, are deemed to be constructively made or incurred during such weekly period. Such laborers and mechanics shall be paid the appropriate wage rate and fringe benefits on the wage determination for the classification of work actually performed, without regard to skill, except as provided in 29 CFR 5.5(a)(4). Laborers or mechanics performing work in more than one classification may be compensated at the rate specified for each classification for the time actually worked therein: *Provided,* that the employer's payroll records accurately set forth the time spent in each classification in which work is performed. The wage determination (including any additional classification and wage rates conformed under 29 CFR 5.5(a)(1)(ii)) and the Davis-Bacon poster (WH-1321) shall be posted at all times by the Contractor and its subcontractors at the site of the work in a prominent and accessible place where it can be easily seen by the workers.

(ii) (a) Any class of laborers or mechanics that is not listed in the wage determination and that is to be employed under this Contract shall be classified in conformance with the wage determination. HUD shall approve an additional classification and wage rate and fringe benefits only when the following criteria have been met:

(1) The work to be performed by the classification requested is not performed by a classification in the wage determination; and

(2) The classification is utilized in the area by the construction industry; and

(3) The proposed wage rate, including any bona fide fringe benefits, bears a reasonable relationship to the wage rates contained in the wage determination.

(b) If the Contractor and the laborers and mechanics to be employed in the classification (if known), or their representatives, and HUD or its designee agree on the classification and wage rate (including the amount designated for fringe benefits where appropriate), a report of the action taken shall be sent by HUD or its designee to the Administrator of the Wage and Hour Division, U.S. Department of Labor, Washington, D.C. 20210 (**"Administrator"**). The Administrator, or an authorized representative, shall approve, modify, or disapprove every additional classification action within thirty (30) days of receipt and so advise HUD or its designee or shall notify HUD or its designee within the thirty (30) day period that additional time is necessary.

(c) In the event the Contractor, the laborers or mechanics to be employed in the classification or their representatives and HUD or its designee do not agree on the proposed classification and wage rate (including the amount designated for fringe benefits, where appropriate), HUD or its designee shall refer the questions, including the views of all interested parties and the recommendation of HUD or its designee, to the Administrator for determination. The Administrator, or an authorized representative, shall issue a determination within thirty (30) days of receipt and so advise HUD or its

designee or shall notify HUD or its designee within the thirty (30) day period that additional time is necessary.

(d) The wage rate (including fringe benefits where appropriate) determined pursuant to subparagraphs B.1.(ii)(b) or (c) of this Article, shall be paid to all workers performing work in the classification under this Contract from the first day on which work is performed in the classification.

(iii) Whenever the minimum wage rate prescribed in the Contract for a class of laborers or mechanics includes a fringe benefit that is not expressed as an hourly rate, the Contractor shall either pay the benefit as stated in the wage determination or shall pay another bona fide fringe benefit or an hourly cash equivalent thereof.

(iv) If the Contractor does not make payments to a trustee or other third person, the Contractor may consider as part of the wages of any laborer or mechanic the amount of any costs reasonably anticipated in providing bona fide fringe benefits under a plan or program, *Provided*, That the Secretary of Labor has found, upon the written request of the Contractor, that the applicable standards of the Davis-Bacon Act have been met. The Secretary of Labor may require the Contractor to set aside in a separate account assets for the meeting of obligations under the plan or program.

2. **Withholding.** HUD or its designee shall upon its own action or upon written request of an authorized representative of the Department of Labor withhold or cause to be withheld from the Contractor under this Contract or any other Federal contract with the same prime contractor, or any other Federally-assisted contract subject to Davis-Bacon prevailing wage requirements, which is held by the same prime contractor, so much of the accrued payments or advances as may be considered necessary to pay laborers and mechanics, including apprentices, trainees and helpers, employed by the Contractor or any subcontractor the full amount of wages required by the Contract. In the event of failure to pay any laborer or mechanic, including any apprentice, trainee or helper, employed or working on the site of the work (or under the United States Housing Act of 1937 or under the Housing Act of 1949 in the construction or development of the Project), all or part of the wages required by the Contract, HUD or its designee may, after written notice to the Contractor, sponsor, applicant, or Owner, take such action as may be necessary to cause the suspension of any further payment, advance, or guarantee of funds until such violations have ceased. HUD or its designee may, after written notice to the Contractor, disburse such amounts withheld for and on account of the Contractor or subcontractor to the respective employees to whom they are due.

3. **Payrolls, records, and certifications.**

(i) Payrolls and basic records relating thereto shall be maintained by the Contractor during the course of the work and preserved for a period of three years thereafter for all laborers and mechanics working at the site of the work (or under the United States Housing Act of 1937, or under the Housing Act of 1949, in the construction or development of the Project). Such records shall contain the name, address, and social security number of each such worker, his or her correct

classification, hourly rates of wages paid (including rates of contributions or costs anticipated for bona fide fringe benefits or cash equivalents thereof of the types described in Section 1 (b)(2)(B) of the Davis-Bacon Act (40 U.S.C. 3141(2)(B)(ii))), daily and weekly number of hours worked, deductions made and actual wages paid. Whenever the Secretary of Labor has found under 29 CFR 5.5(a)(1)(iv) that the wages of any laborer or mechanic include the amount of any costs reasonably anticipated in providing benefits under a plan or program described in Section 1 (b)(2)(B) of the Davis-Bacon Act (40 U.S.C. 3141(2)(B)(ii)), the Contractor shall maintain records which show that the commitment to provide such benefits is enforceable, that the plan or program is financially responsible, and that the plan or program has been communicated in writing to the laborers or mechanics affected, and records which show the costs anticipated or the actual cost incurred in providing such benefits. Contractors employing apprentices or trainees under approved programs shall maintain written evidence of the registration of apprenticeship programs and certification of trainee programs, the registration of the apprentices and trainees, and the ratios and wage rates prescribed in the applicable programs.

(ii)(a) The Contractor shall submit weekly for each week in which any contract work is performed a copy of all payrolls to HUD or its designee if the agency is a party to the Contract, but if the agency is not such a party, the Contractor shall submit the payrolls to the applicant, sponsor, or Owner, as the case may be, for transmission to HUD or its designee. The payrolls submitted shall set out accurately and completely all of the information required to be maintained under 29 CFR 5.5(a)(3)(i), except that full social security numbers and home addresses shall not be included on weekly transmittals. Instead the payrolls shall only need to include an individually identifying number for each employee (e.g., the last four digits of the employee's social security number). The required weekly payroll information may be submitted in any form desired, whether paper (Optional Form WH-347 is available for this purpose from the Wage and Hour Division Web site at http://www.dol.gov/whd/forms/wh347.pdf or its successor site), or electronically pursuant to Program Obligations. The prime contractor is responsible for the submission of copies of payrolls by all subcontractors. Contractors and subcontractors shall maintain the full social security number and current address of each covered worker, and shall provide them upon request to HUD or its designee if the agency is a party to the Contract, but if the agency is not such a party, the Contractor will submit the payrolls to the applicant sponsor, or Owner, as the case may be, for transmission to HUD or its designee, the Contractor, or the Wage and Hour Division of the Department of Labor for purposes of an investigation or audit of compliance with prevailing wage requirements. It is not a violation of this subparagraph for a prime contractor to require a subcontractor to provide addresses and social security numbers to the prime contractor for its own records, without weekly submission to HUD or its designee.

(b) Each payroll submitted shall be accompanied by a "Statement of Compliance," signed by the Contractor or subcontractor or his or her agent who pays or

supervises the payment of the persons employed under the Contract and shall certify the following:

(1) That the payroll for the payroll period contains the information required to be provided under 29 CFR 5.5(a)(3)(ii), the appropriate information is being maintained under 29 CFR 5.5(a)(3)(i), and that such information is correct and complete.
(2) That each laborer or mechanic (including each helper, apprentice, and trainee) employed on the Contract during the payroll period has been paid the full weekly wages earned, without rebate, either directly or indirectly, and that no deductions have been made either directly or indirectly from the full wages earned, other than permissible deductions as set forth in 29 CFR Part 3;

(3) That each laborer or mechanic has been paid not less than the applicable wage rates and fringe benefits or cash equivalents for the classification of work performed, as specified in the applicable wage determination incorporated into the Contract.

(c) The weekly submission of a properly executed certification set forth on the reverse side of Optional Form WH-347 shall satisfy the requirement for submission of the "Statement of Compliance" required by subparagraph B.3.(ii)(b) of this Article.

(d) The falsification of any of the above certifications may subject the Contractor or subcontractor to civil or criminal prosecution under Section 1001 of Title 18 and Sections 3801 et seq of Title 31 of the United States Code.

(iii) The Contractor or subcontractor shall make the records required under subparagraph B.3.(i) of this Article available for inspection, copying, or transcription by authorized representatives of HUD or its designee or the Department of Labor, and shall permit such representatives to interview employees during working hours on the job. If the Contractor or subcontractor fails to submit the required records or to make them available, HUD or its designee may, after written notice to the Contractor, sponsor, applicant, or Owner, take such action as may be necessary to cause the suspension of any further payment, advance, or guarantee of funds. Furthermore, failure to submit the required records upon request or to make such records available may be grounds for debarment action pursuant to 29 CFR 5.12.

4. **Apprentices and Trainees.**

(i) **Apprentices.** Apprentices shall be permitted to work at less than the predetermined rate for the work they performed when they are employed pursuant to and individually registered in a bona fide apprenticeship program registered with the U.S. Department of Labor, Employment and Training Administration, Office of Apprenticeship, or with a State Apprenticeship Agency recognized by such Office, or if a person is employed in his or her first ninety (90) days of probationary employment as an apprentice in such an apprenticeship program, who is not individually registered in the

program, but who has been certified by the Office of Apprenticeship, or a State Apprenticeship Agency (where appropriate) to be eligible for probationary employment as an apprentice. The allowable ratio of apprentices to journeymen on the job site in any craft classification shall not be greater than the ratio permitted to the Contractor as to the entire work force under the registered program. Any worker listed on a payroll at an apprentice wage rate, who is not registered or otherwise employed as stated above, shall be paid not less than the applicable wage rate on the wage determination for the classification of work actually performed. In addition, any apprentice performing work on the job site in excess of the ratio permitted under the registered program shall be paid not less than the applicable wage rate on the wage determination for the work actually performed. Where the Contractor is performing construction on a project in a locality other than that in which its program is registered, the ratios and wage rates (expressed in percentages of the journeyman's hourly rate) specified in the Contractor's or subcontractor's registered program shall be observed. Every apprentice must be paid at not less than the rate specified in the registered program for the apprentice's level of progress, expressed as a percentage of the journeymen hourly rate specified in the applicable wage determination. Apprentices shall be paid fringe benefits in accordance with the provisions of the apprenticeship program. If the apprenticeship program does not specify fringe benefits, apprentices must be paid the full amount of fringe benefits listed on the wage determination for the applicable classification. If the Administrator determines that a different practice prevails for the applicable apprentice classification, fringes shall be paid in accordance with that determination. In the event the Office of Apprenticeship, or a State Apprenticeship Agency recognized by such Office, withdraws approval of an apprenticeship program, the Contractor shall no longer be permitted to utilize apprentices at less than the applicable predetermined rate for the work performed until an acceptable program is approved.

(ii) **Trainees.** Except as provided in 29 CFR 5.16, trainees shall not be permitted to work at less than the predetermined rate for the work performed unless they are employed pursuant to and individually registered in a program which has received prior approval, evidenced by formal certification by the U.S. Department of Labor, Employment and Training Administration. The ratio of trainees to journeymen on the job site shall not be greater than permitted under the plan approved by the Employment and Training Administration. Every trainee must be paid at not less than the rate specified in the approved program for the trainee's level of progress, expressed as a percentage of the journeyman's hourly rate specified in the applicable wage determination. Trainees shall be paid fringe benefits in accordance with the provisions of the trainee program. If the trainee program does not mention fringe benefits, trainees shall be paid the full amount of fringe benefits listed on the wage determination unless the Administrator of the Wage and Hour Division determines that there is an apprenticeship program associated with the corresponding journeyman wage rate on the wage determination which provides for less than full fringe benefits for apprentices. Any employee listed on the payroll at a trainee rate who is not registered and participating in a training plan approved by the Employment and Training Administration shall be paid not less than the applicable wage rate on the wage determination for the classification of work actually performed. In addition, any trainee performing work on

the job site in excess of the ratio permitted under the registered program shall be paid not less than the applicable wage rate on the wage determination for the work actually performed. In the event the Employment and Training Administration withdraws approval of a training program, the Contractor shall no longer be permitted to utilize trainees at less than the applicable predetermined rate for the work performed until an acceptable program is approved.

(iii) **Equal employment opportunity.** The utilization of apprentices, trainees and journeymen under 29 CFR Part 5 shall be in conformity with the equal employment opportunity requirements of Executive Order 11246, as amended, and 29 CFR Part 30.

5. **Compliance with Copeland Act Requirements.** The Contractor shall comply with the requirements of 29 CFR Part 3, which are incorporated by reference in this Contract.

6. **Subcontracts.** The Contractor or subcontractor shall insert in any subcontracts the clauses set forth in subparagraphs 1 through 10 of this paragraph B and such other clauses as HUD or its designee may by appropriate instructions require, and a copy of the applicable prevailing wage determination, and also a clause requiring the subcontractors to include these clauses in any lower tier subcontracts. The prime contractor shall be responsible for the compliance by any subcontractor or lower tier subcontractor with all Contract clauses referenced in this subparagraph.

7. **Contract termination and debarment.** A breach of the Contract clauses in 29 CFR 5.5 may be grounds for termination of the Contract, and for debarment as a contractor or a subcontractor as provided in 29 CFR 5.12.

8. **Compliance with Davis-Bacon and Related Act Requirements.** All rulings and interpretations of the Davis-Bacon and Related Acts contained in 29 CFR Parts 1, 3, and 5 are herein incorporated by reference in this Contract.

9. **Disputes concerning labor standards.** Disputes arising out of the labor standards provisions of this Contract shall not be subject to the general disputes clause of this Contract. Such disputes shall be resolved in accordance with the procedures of the Department of Labor set forth in 29 CFR Parts 5, 6, and 7. Disputes within the meaning of this clause include disputes between the Contractor (or any of its subcontractors) and HUD or its designee, the U.S. Department of Labor, or the employees or their representatives.

10. **Certification of Eligibility.**

(i) By entering into this Contract, the Contractor certifies that neither it (nor he or she) nor any person or firm who has an interest in the Contractor's firm is a person or firm ineligible to be awarded Government contracts by virtue of Section 3(a) of the Davis-Bacon Act (40 U.S.C. 3144(b)(2)) or 29 CFR 5.12(a)(1) or to be awarded HUD contracts or participate in HUD programs pursuant to 24 CFR Part 24.

(ii) No part of this Contract shall be subcontracted to any person or firm ineligible for award of a Government contract by virtue of Section 3(a) of the Davis-Bacon Act (40 U.S.C. 3144(b)(2)) or 29 CFR 5.12(a)(1) or to be awarded HUD contracts or participate in HUD programs pursuant to 24 CFR Part 24.

(iii) The penalty for making false statements is prescribed in the U.S. Criminal Code, 18 U.S.C. 1001. Additionally, U.S. Criminal Code, Section 1010, Title 18, U.S.C., “Federal Housing Administration transactions”, provides in part: “Whoever, for the purpose of . . . influencing in any way the action of such Department . . . makes, passes, utters or publishes any statement, knowing the same to be false . . . shall be fined under this title or imprisoned not more than two years, or both.”

C. **Contract Work Hours and Safety Standards Act.**

1. **Applicability and Definitions.** This paragraph C of Article 1 is applicable only if a direct form of federal assistance is involved, such as Section 8, Section 202/811 Capital Advance, grants etc., and is applicable only where the prime contract is in an amount greater than $100,000. As used in this paragraph C, the terms "laborers" and "mechanics" include watchmen and guards.

2. **Overtime requirements.** No contractor or subcontractor contracting for any part of the Contract work that may require or involve the employment of laborers or mechanics shall require or permit any such laborer or mechanic in any workweek in which he or she is employed on such work to work in excess of forty (40) hours in such workweek unless such laborer or mechanic receives compensation at a rate not less than one and one-half times the basic rate of pay for all hours worked in excess of forty (40) hours in such workweek.

3. **Violation; liability for unpaid wages; liquidated damages.** In the event of any violation of the immediately preceding subparagraph C.2, the Contractor and any subcontractor responsible therefore shall be liable for the unpaid wages. In addition, the Contractor and subcontractor shall be liable to the United States (in the case of work done under contract for the District of Columbia or a territory, to such District or to such territory) for liquidated damages. Such liquidated damages shall be computed with respect to each individual laborer or mechanic, including watchmen and guards, employed in violation of such subparagraph, in the sum of $10 for each calendar day on which such individual was required or permitted to work in excess of the standard workweek of forty (40) hours without payment of the overtime wages required by the clause set forth in such subparagraph.

4. **Withholding for unpaid wages and liquidated damages.** HUD or its designee shall, upon its own action or upon written request of an authorized representative of the Department of Labor, withhold or cause to be withheld from any moneys payable on account of work performed by the Contractor or subcontractor under any such contract, or under any other Federal contract with the same prime contractor, or under any other Federally-assisted contract subject to the Contract Work

Hours and Safety Standards Act which is held by the same prime contractor such sums as may be determined to be necessary to satisfy any liabilities of such Contractor or subcontractor for unpaid wages and liquidated damages as provided in the clause set forth in subparagraph 3 of this paragraph C.

5. **Subcontracts.** The Contractor or subcontractor shall insert in any subcontracts the clauses set forth in subparagraphs 1 through 5 of this paragraph C and also a clause requiring the subcontractors to include these clauses in any lower tier subcontracts. The prime contractor shall be responsible for compliance by any subcontractor or lower tier subcontractor with the clauses set forth in such subparagraphs 1 through 5.

D. **Certification.**

For projects with Security Instruments insured under the National Housing Act, as amended, that are subject to paragraph B of this Article 1, the Contractor is required to execute the Contractor's Prevailing Wage Certificate within HUD-92448 as a condition precedent to insurance by HUD of the Loan, or an advance thereof, made or to be made by the Lender in connection with the construction of the Project.

Article 2: Equal Employment Opportunity

A. **Applicability.** This Article 2 applies to any contract for construction work, or modification thereof, as defined in the regulations of the Secretary of Labor at 41 CFR Chapter 60, which is paid for in whole or in part with funds obtained from the Federal Government or borrowed on the credit of the Federal Government pursuant to a grant, contract, loan insurance, or guarantee, or undertaken pursuant to any Federal program involving such grant, contract, loan, insurance, or guarantee.

B. The Contractor shall not discriminate against any employee or applicant for employment because of race, color, religion, sex, sexual orientation, gender identity, disability, or national origin. The Contractor shall take affirmative action to ensure that applicants are employed, and that employees are treated during employment without regard to their race, color, religion, sex, sexual orientation, gender identity, disability or national origin. Such action shall include, but not be limited to the following: employment, upgrading, demotion, or transfer; recruitment or recruitment advertising; layoff or termination; rates of pay or other forms of compensation; and selection for training including apprenticeship. The Contractor agrees to post in conspicuous places available to employees and applicants for employment notices to be provided setting forth the provisions of this nondiscrimination clause.

C. The Contractor shall, in all solicitations or advertisements for employees placed by or on behalf of the Contractor state that all qualified applicants shall receive consideration for employment without regard to race, color, religion, sex, sexual orientation, gender identity, disability, or national origin.

D. The Contractor shall send to each labor union or representative of workers with which it has a collective bargaining agreement or other contract or understanding a

notice to be provided advising the said labor union or workers representatives of the Contractor's commitments hereunder, and shall post copies of the notice in conspicuous places available to employees and applicants for employment.

E. The Contractor shall comply with all provisions of Executive Order 11246 of September 24, 1965 and of the rules, regulations, and relevant orders of the Secretary of Labor.

F. The Contractor shall furnish all information and reports required by Executive Order 11246 of September 24, 1965, and by rules, regulations, and orders of the Secretary of Labor, or pursuant thereto, and shall permit access to its books, records, and accounts by the Secretary of Labor for purposes of investigation to ascertain compliance with such rules, regulations, and orders.

G. In the event of the Contractor's noncompliance with the nondiscrimination clauses of this Contract or with any of the said rules, regulations, or orders, this Contract may be canceled, terminated, or suspended in whole or in part and Contractor may be declared ineligible for further government contracts or federally assisted construction contracts in accordance with procedures authorized in Executive Order 11246 of September 24, 1965, and such other sanctions may be imposed and remedies invoked as provided in Executive Order 11246 of September 24, 1965, or by rule, regulations or order of the Secretary of Labor, or as otherwise provided by law.

H. The Contractor shall include the provisions of paragraphs A through H of this Article 2 in every subcontract or purchase order unless exempted by rules, regulations, or orders of the Secretary of Labor issued pursuant to Section 204 of Executive Order 11246 of September 24, 1965, so that such provisions shall be binding upon each subcontractor or vendor. The Contractor shall take such action with respect to any subcontract or purchase order as HUD or the Secretary of Labor may direct as a means of enforcing such provisions, including sanctions for noncompliance. *Provided, however,* that in the event the Contractor becomes involved in, or is threatened with, litigation with a subcontractor or vendor as a result of such direction by HUD or the Secretary of Labor, the Contractor may request the United States to enter into such litigation to protect the interests of the United States.

Article 3: Equal Opportunity for Businesses and Lower Income Persons Located Within the Project Area

A. This Article 3 is applicable to projects covered by Section 3, as defined in 24 CFR Part 135.

B. The work to be performed under this Contract is on a project assisted under a program providing Federal financial assistance from HUD and is subject to the requirements of Section 3 of the Housing and Urban Development Act of 1968, as amended, 12 U.S.C. 1701u. Section 3 requires that to the greatest extent feasible opportunities for training and employment be given to low and very-low income residents of the unit of local government or the metropolitan area (or non-metropolitan county) as determined by HUD in which the Project is located and contracts for work in connection with the Project be awarded to business concerns which are located in, or owned in substantial part by persons residing in the same metropolitan area (or non-metropolitan county) as the Project.

Article 4: Health and Safety

A. This Article 4 is applicable only where the prime contract is in an amount greater than $100,000.

B. No laborer or mechanic shall be required to work in surroundings or under working conditions which are unsanitary, hazardous, or dangerous to his or her health and safety as determined under construction safety and health standards promulgated by the Secretary of Labor by regulation.

C. The Contractor shall comply with all regulations issued by the Secretary of Labor pursuant to 29 CFR Part 1926, and failure to comply may result in imposition of sanctions pursuant to the Contract Work Hours and Safety Standards Act, 40 USC 3701 et seq.

D. The Contractor shall include the provisions of this Article 4 in every subcontract so that such provisions shall be binding on each subcontractor. The Contractor shall take such action with respect to any subcontract as HUD or the Secretary of Labor shall direct as a means of enforcing such provisions.

SECTION 007343 - WAGE RATE REQUIREMENTS

1.1 WAGE RATE REQUIREMENTS

A. The Davis-Bacon Act prevailing wage rates for the Project location shall apply for this Project and are attached to the end of this Section.

PART 2 - PRODUCTS (Not Used)

PART 3 - EXECUTION (Not Used)

END OF SECTION 007200

"General Decision Number: FL20220080 07/01/2022

Superseded General Decision Number: FL20210080

State: Florida

Construction Type: Residential

County: Pasco County in Florida.

RESIDENTIAL CONSTRUCTION PROJECTS (consisting of single family homes and apartments up to and including 4 stories).

Note: Contracts subject to the Davis-Bacon Act are generally required to pay at least the applicable minimum wage rate required under Executive Order 14026 or Executive Order 13658. Please note that these Executive Orders apply to covered contracts entered into by the federal government that are subject to the Davis-Bacon Act itself, but do not apply to contracts subject only to the Davis-Bacon Related Acts, including those set forth at 29 CFR 5.1(a)(2)-(60).

If the contract is entered into on or after January 30, 2022, or the contract is renewed or extended (e.g., an option is exercised) on or after January 30, 2022:	. Executive Order 14026 generally applies to the contract. . The contractor must pay all covered workers at least $15.00 per hour (or the applicable wage rate listed on this wage determination, if it is higher) for all hours spent performing on the contract in 2022.
If the contract was awarded on or between January 1, 2015 and January 29, 2022, and the contract is not renewed or extended on or after January 30, 2022:	. Executive Order 13658 generally applies to the contract. . The contractor must pay all covered workers at least $11.25 per hour (or the applicable wage rate listed on this wage determination, if it is higher) for all hours spent performing on that contract in 2022.

The applicable Executive Order minimum wage rate will be adjusted annually. If this contract is covered by one of the Executive Orders and a classification considered necessary for performance of work on the contract does not appear on this wage determination, the contractor must still submit a

conformance request.

Additional information on contractor requirements and worker protections under the Executive Orders is available at https://www.dol.gov/agencies/whd/government-contracts.

Modification Number	Publication Date
0	01/07/2022
1.	02/25/2022
2.	07/01/2022

ENGI0925-008 06/01/2013

	Rates	Fringes
POWER EQUIPMENT OPERATOR:		
Crawler Cranes; Truck Cranes; Pile Driver Cranes; Rough Terrain Cranes; and Any Crane not otherwise described below...	$ 29.61	11.50
Hydraulic Cranes Rated 100 Tons or Above but Less Than 250 Tons; and Lattice Boom Cranes Less Than 150 Tons if not described below.	$ 30.61	11.50
Lattice Boom Cranes Rated at 150 Tons or Above; Friction Cranes of Any Size; Mobile Tower Cranes or Luffing Boom Cranes of Any Size; Electric Tower Cranes; Hydraulic Cranes Rated at 250 Tons or Above; and Any Crane Equipped with 300 Foot or More of Any Boom Combination.....	$ 31.61	11.50
Oiler.....	$ 22.91	11.50

---

* IRON0397-004 07/01/2022

	Rates	Fringes
IRONWORKER, REINFORCING.....	$ 32.60	16.97

---

* SUFL2009-119 06/08/2009

	Rates	Fringes
BRICKLAYER.....	$ 20.00	0.00
CARPENTER, Includes Form Work		

(Excludes Drywall Hanging).....$ 12.16 ** 0.00

CEMENT MASON/CONCRETE FINISHER...$ 14.58 ** 0.00

DRYWALL FINISHER/TAPER.....$ 25.00 0.00

DRYWALL HANGER.....$ 20.00 0.00

ELECTRICIAN.....$ 11.98 ** 0.00

FENCE ERECTOR.....$ 14.00 ** 0.75

GLAZIER.....$ 15.88 0.00

INSULATOR: Batt and Blown.....$ 12.41 ** 0.00

IRONWORKER, ORNAMENTAL.....$ 12.50 ** 0.00

LABORER: Common or General.....$ 10.25 ** 0.00

LABORER: Mason Tender - Brick...$ 11.51 ** 0.00

LABORER: Mason Tender -
Cement/Concrete.....$ 11.29 ** 0.00

LABORER: Pipelayer.....$ 15.14 0.00

LABORER: Roof Tearoff.....$ 9.00 ** 0.00

LABORER: Landscape and
Irrigation.....$ 10.72 ** 0.00

OPERATOR: Asphalt Paver.....$ 12.40 ** 0.00

OPERATOR: Backhoe Loader
Combo.....$ 17.04 0.00

OPERATOR: Backhoe/Excavator.....$ 15.25 0.00

OPERATOR: Bulldozer.....$ 12.67 ** 0.00

OPERATOR: Distributor.....$ 11.41 ** 0.00

OPERATOR: Forklift.....$ 17.50 0.00

OPERATOR: Grader/Blade.....$ 14.00 ** 0.00

OPERATOR: Loader.....$ 11.50 ** 0.00

OPERATOR: Roller.....$ 10.62 ** 0.00

OPERATOR: Screed.....$ 10.93 ** 0.00

OPERATOR: Trackhoe.....$ 14.81 ** 0.00

OPERATOR: Tractor.....$ 10.20 ** 0.00

PAINTER, Includes Brush,
Roller and Spray (Excludes
Drywall Finishing/Taping).....$ 13.59 ** 0.00

PLASTERER.....$ 13.91 ** 0.00

PLUMBER.....$ 12.97 ** 0.00

ROOFER, Includes Built Up,
Modified Bitumen, and Shake &
Shingle Roofs (Excludes Metal
Roofs).....$ 15.98 0.00

ROOFER: Metal Roof.....$ 16.99 0.00

SHEET METAL WORKER, Includes
HVAC Duct Installation
(Excludes Metal Roof
Installation).....$ 13.32 ** 0.00

TILE SETTER.....$ 16.00 0.00

TRUCK DRIVER, Includes Dump
Truck.....$ 10.22 ** 0.00

TRUCK DRIVER: Lowboy Truck.....$ 12.10 ** 0.00

WELDERS - Receive rate prescribed for craft performing
operation to which welding is incidental.

==========

** Workers in this classification may be entitled to a higher
minimum wage under Executive Order 14026 ($15.00) or 13658
($11.25). Please see the Note at the top of the wage
determination for more information.

Note: Executive Order (EO) 13706, Establishing Paid Sick Leave
for Federal Contractors applies to all contracts subject to the
Davis-Bacon Act for which the contract is awarded (and any
solicitation was issued) on or after January 1, 2017. If this
contract is covered by the EO, the contractor must provide
employees with 1 hour of paid sick leave for every 30 hours
they work, up to 56 hours of paid sick leave each year.
Employees must be permitted to use paid sick leave for their
own illness, injury or other health-related needs, including
preventive care; to assist a family member (or person who is
like family to the employee) who is ill, injured, or has other
health-related needs, including preventive care; or for reasons
resulting from, or to assist a family member (or person who is

like family to the employee) who is a victim of, domestic violence, sexual assault, or stalking. Additional information on contractor requirements and worker protections under the EO is available at https://www.dol.gov/agencies/whd/government-contracts.

Unlisted classifications needed for work not included within the scope of the classifications listed may be added after award only as provided in the labor standards contract clauses (29CFR 5.5 (a) (1) (ii)).

The body of each wage determination lists the classification and wage rates that have been found to be prevailing for the cited type(s) of construction in the area covered by the wage determination. The classifications are listed in alphabetical order of ""identifiers"" that indicate whether the particular rate is a union rate (current union negotiated rate for local), a survey rate (weighted average rate) or a union average rate (weighted union average rate).

Union Rate Identifiers

A four letter classification abbreviation identifier enclosed in dotted lines beginning with characters other than ""SU"" or ""UAVG"" denotes that the union classification and rate were prevailing for that classification in the survey. Example: PLUM0198-005 07/01/2014. PLUM is an abbreviation identifier of the union which prevailed in the survey for this classification, which in this example would be Plumbers. 0198 indicates the local union number or district council number where applicable, i.e., Plumbers Local 0198. The next number, 005 in the example, is an internal number used in processing the wage determination. 07/01/2014 is the effective date of the most current negotiated rate, which in this example is July 1, 2014.

Union prevailing wage rates are updated to reflect all rate changes in the collective bargaining agreement (CBA) governing this classification and rate.

Survey Rate Identifiers

Classifications listed under the ""SU"" identifier indicate that no one rate prevailed for this classification in the survey and the published rate is derived by computing a weighted average rate based on all the rates reported in the survey for that classification. As this weighted average rate includes all rates reported in the survey, it may include both union and non-union rates. Example: SULA2012-007 5/13/2014. SU indicates the rates are survey rates based on a weighted average

calculation of rates and are not majority rates. LA indicates the State of Louisiana. 2012 is the year of survey on which these classifications and rates are based. The next number, 007 in the example, is an internal number used in producing the wage determination. 5/13/2014 indicates the survey completion date for the classifications and rates under that identifier.

Survey wage rates are not updated and remain in effect until a new survey is conducted.

Union Average Rate Identifiers

Classification(s) listed under the UAVG identifier indicate that no single majority rate prevailed for those classifications; however, 100% of the data reported for the classifications was union data. EXAMPLE: UAVG-OH-0010 08/29/2014. UAVG indicates that the rate is a weighted union average rate. OH indicates the state. The next number, 0010 in the example, is an internal number used in producing the wage determination. 08/29/2014 indicates the survey completion date for the classifications and rates under that identifier.

A UAVG rate will be updated once a year, usually in January of each year, to reflect a weighted average of the current negotiated/CBA rate of the union locals from which the rate is based.

WAGE DETERMINATION APPEALS PROCESS

1.) Has there been an initial decision in the matter? This can be:

* an existing published wage determination
* a survey underlying a wage determination
* a Wage and Hour Division letter setting forth a position on a wage determination matter
* a conformance (additional classification and rate) ruling

On survey related matters, initial contact, including requests for summaries of surveys, should be with the Wage and Hour National Office because National Office has responsibility for the Davis-Bacon survey program. If the response from this initial contact is not satisfactory, then the process described in 2.) and 3.) should be followed.

With regard to any other matter not yet ripe for the formal process described here, initial contact should be with the Branch of Construction Wage Determinations. Write to:

Branch of Construction Wage Determinations

Wage and Hour Division
U.S. Department of Labor
200 Constitution Avenue, N.W.
Washington, DC 20210

2.) If the answer to the question in 1.) is yes, then an interested party (those affected by the action) can request review and reconsideration from the Wage and Hour Administrator (See 29 CFR Part 1.8 and 29 CFR Part 7). Write to:

Wage and Hour Administrator
U.S. Department of Labor
200 Constitution Avenue, N.W.
Washington, DC 20210

The request should be accompanied by a full statement of the interested party's position and by any information (wage payment data, project description, area practice material, etc.) that the requestor considers relevant to the issue.

3.) If the decision of the Administrator is not favorable, an interested party may appeal directly to the Administrative Review Board (formerly the Wage Appeals Board). Write to:

Administrative Review Board
U.S. Department of Labor
200 Constitution Avenue, N.W.
Washington, DC 20210

4.) All decisions by the Administrative Review Board are final.

==========

END OF GENERAL DECISION"

SECTION 011000 - SUMMARY

PART 1 - GENERAL

1.1 SUMMARY

A. Section Includes:
1. Project information.
2. Work covered by Contract Documents.
3. Phased construction.
4. Work under separate contracts.
5. Access to site.
6. Coordination with occupants.
7. Work restrictions.
8. Specification and drawing conventions.
9. Miscellaneous provisions.

B. Related Requirements:
1. Section 015000 "Temporary Facilities and Controls" for limitations and procedures governing temporary use of Owner's facilities.

1.2 PROJECT INFORMATION

A. Project Identification: Magnolia Oaks.
1. Project Location: 7240 & 7338 Massachusetts Avenue, New Port Richey, Florida.

B. Owner: Pinellas County Housing Authority.

C. Architect: Goodwyn Mills Cawood, 201 North Franklin Street, Suite 250, Tampa, Florida 33602. Tel. No. (813) 678-2420.

D. Structural Engineer: Structures One, P.O. Box 97, Odessa, Florida 33556. Tel. No. (813) 549-5128.

E. MEP Engineer: Emerald Engineering Inc., 9942 Currie Davis Drive, Suite H, Tampa, Florida 33619. Tel. No. 813-995-0300.

1.3 WORK COVERED BY CONTRACT DOCUMENTS

A. The Work of Project is defined by the Contract Documents.

B. Type of Contract.
1. Project will be constructed under a single prime contract.

1.4 WORK BY OWNER

A. Certain items, as enumerated on Drawings or determined by Owner, will be Owner furnished and installed or Owner furnished and Contractor installed.

B. For Owner furnished and Contract installed items, comply with the following:
   1. Provide all rough-in services and make all final connections. Contractor shall be required to request shop drawings, catalog cuts, schedules, and similar submittals from the Owner, as necessary to properly coordinate utility connections, preparations, roof openings, and equipment support to accommodate actual furnished items and equipment.
   2. Designate a competent individual on the job-site staff as “authorized representative” for Owner furnished equipment. This individual will be responsible for furnishing information on desired delivery schedules, proper receipt and reporting of all shipments received as described herein, and be responsible for proper storage and handling of the equipment at all times.

1.5 ACCESS TO SITE

A. General: Contractor shall have full use of Project site for construction operations during construction period. Contractor's use of Project site is limited only by Owner's right to perform work or to retain other contractors on portions of Project.

1.6 WORK RESTRICTIONS

A. Work Restrictions, General: Comply with restrictions on construction operations.
   1. Comply with limitations on use of public streets and with other requirements of authorities having jurisdiction.

B. On-Site Work Hours: Limit work in the existing building to normal business working hours of 8:00 a.m. to 5:00 p.m., Monday through Friday, unless otherwise indicated.

C. Nonsmoking Restriction: Smoking is not permitted on the Project site.

D. Controlled Substances: Use of tobacco products and other controlled substances on Project site is not permitted.

1.7 SPECIFICATION AND DRAWING CONVENTIONS

A. Specification Content: The Specifications use certain conventions for the style of language and the intended meaning of certain terms, words, and phrases when used in particular situations. These conventions are as follows:
   1. Imperative mood and streamlined language are generally used in the Specifications. The words "shall," "shall be," or "shall comply with," depending on the context, are implied where a colon (:) is used within a sentence or phrase.
   2. Specification requirements are to be performed by Contractor unless specifically stated otherwise.

B. Division 01 General Requirements: Requirements of Sections in Division 01 apply to the Work of all Sections in the Specifications.

C. Drawing Coordination: Requirements for materials and products identified on Drawings are described in detail in the Specifications. One or more of the following are used on Drawings to identify materials and products:
   1. Terminology: Materials and products are identified by the typical generic terms used in the individual Specifications Sections.
   2. Abbreviations: Materials and products are identified by abbreviations and scheduled on Drawings.
   3. Keynoting: Materials and products are identified by reference keynotes referencing Specification Section numbers found in this Project Manual.

PART 2 - PRODUCTS (Not Used)

PART 3 - EXECUTION (Not Used)

END OF SECTION 011000

SECTION 012500 - SUBSTITUTION PROCEDURES

PART 1 - GENERAL

1.1 SUMMARY

A. Section includes administrative and procedural requirements for substitutions.

B. Related Requirements:
   1. Section 016000 "Product Requirements" for requirements for submitting comparable product submittals for products by listed manufacturers.

1.2 DEFINITIONS

A. Substitutions: Changes in products, materials, equipment, and methods of construction from those required by the Contract Documents and proposed by Contractor.

   1. Substitutions for Cause: Changes proposed by Contractor that are required due to changed Project conditions, such as unavailability of product, regulatory changes, or unavailability of required warranty terms.
   2. Substitutions for Convenience: Changes proposed by Contractor or Owner that are not required in order to meet other Project requirements but may offer advantage to Contractor or Owner.

1.3 ACTION SUBMITTALS

A. Substitution Requests: Submit three copies of each request for consideration. Identify product or fabrication or installation method to be replaced. Include Specification Section number and title and Drawing numbers and titles.

   1. Substitution Request Form: Use form acceptable to Architect.
   2. Documentation: Show compliance with requirements for substitutions and the following, as applicable:

      a. Statement indicating why specified product or fabrication or installation cannot be provided, if applicable.
      b. Coordination information, including a list of changes or revisions needed to other parts of the Work and to construction performed by Owner and separate contractors, that will be necessary to accommodate proposed substitution.

c. Detailed comparison of significant qualities of proposed substitution with those of the Work specified. Include annotated copy of applicable Specification Section. Significant qualities may include attributes such as performance, weight, size, durability, visual effect, sustainable design characteristics, warranties, and specific features and requirements indicated. Indicate deviations, if any, from the Work specified.
d. Product Data, including drawings and descriptions of products and fabrication and installation procedures.
e. Samples, where applicable or requested.
f. Certificates and qualification data, where applicable or requested.
g. List of similar installations for completed projects with project names and addresses and names and addresses of architects and owners.
h. Material test reports from a qualified testing agency indicating and interpreting test results for compliance with requirements indicated.
i. Research reports evidencing compliance with building code in effect for Project, from **ICC-ES**.
j. Detailed comparison of Contractor's construction schedule using proposed substitution with products specified for the Work, including effect on the overall Contract Time. If specified product or method of construction cannot be provided within the Contract Time, include letter from manufacturer, on manufacturer's letterhead, stating date of receipt of purchase order, lack of availability, or delays in delivery.
k. Cost information, including a proposal of change, if any, in the Contract Sum.
l. Contractor's certification that proposed substitution complies with requirements in the Contract Documents except as indicated in substitution request, is compatible with related materials, and is appropriate for applications indicated.
m. Contractor's waiver of rights to additional payment or time that may subsequently become necessary because of failure of proposed substitution to produce indicated results.

3. Architect's Action: If necessary, Architect will request additional information or documentation for evaluation within **seven** days of receipt of a request for substitution. Architect will notify Contractor of acceptance or rejection of proposed substitution within **15** days of receipt of request, or **seven** days of receipt of additional information or documentation, whichever is later.

a. Forms of Acceptance: Change Order, Construction Change Directive, or Architect's Supplemental Instructions for minor changes in the Work.
b. Use product specified if Architect does not issue a decision on use of a proposed substitution within time allocated.

1.4 QUALITY ASSURANCE

A. Compatibility of Substitutions: Investigate and document compatibility of proposed substitution with related products and materials. Engage a qualified testing agency to perform compatibility tests recommended by manufacturers.

1.5 PROCEDURES

A. Coordination: Revise or adjust affected work as necessary to integrate work of the approved substitutions.

PART 2 - PRODUCTS

2.1 SUBSTITUTIONS

A. Substitutions for Cause: Submit requests for substitution immediately on discovery of need for change, but not later than **15** days prior to time required for preparation and review of related submittals.
   1. Conditions: Architect will consider Contractor's request for substitution when the following conditions are satisfied. If the following conditions are not satisfied, Architect will return requests without action, except to record noncompliance with these requirements:
      a. Requested substitution is consistent with the Contract Documents and will produce indicated results.
      b. Requested substitution provides sustainable design characteristics that specified product provided.
      c. Substitution request is fully documented and properly submitted.
      d. Requested substitution will not adversely affect Contractor's construction schedule.
      e. Requested substitution has received necessary approvals of authorities having jurisdiction.
      f. Requested substitution is compatible with other portions of the Work.
      g. Requested substitution has been coordinated with other portions of the Work.
      h. Requested substitution provides specified warranty.
      i. If requested substitution involves more than one contractor, requested substitution has been coordinated with other portions of the Work, is uniform and consistent, is compatible with other products, and is acceptable to all contractors involved.

B. Substitutions for Convenience: Not allowed unless otherwise indicated.

C. Substitutions for Convenience: Architect will consider requests for substitution if received within 60 days after the Notice to Proceed. Requests received after that time may be considered or rejected at discretion of Architect.
   1. Conditions: Architect will consider Contractor's request for substitution when the following conditions are satisfied. If the following conditions are not satisfied, Architect will return requests without action, except to record noncompliance with these requirements:

a. Requested substitution offers Owner a substantial advantage in cost, time, energy conservation, or other considerations, after deducting additional responsibilities Owner must assume. Owner's additional responsibilities may include compensation to Architect for redesign and evaluation services, increased cost of other construction by Owner, and similar considerations.
b. Requested substitution does not require extensive revisions to the Contract Documents.
c. Requested substitution is consistent with the Contract Documents and will produce indicated results.
d. Requested substitution provides sustainable design characteristics that specified product provided.
e. Substitution request is fully documented and properly submitted.
f. Requested substitution will not adversely affect Contractor's construction schedule.
g. Requested substitution has received necessary approvals of authorities having jurisdiction.
h. Requested substitution is compatible with other portions of the Work.
i. Requested substitution has been coordinated with other portions of the Work.
j. Requested substitution provides specified warranty.
k. If requested substitution involves more than one contractor, requested substitution has been coordinated with other portions of the Work, is uniform and consistent, is compatible with other products, and is acceptable to all contractors involved.

PART 3 - EXECUTION (Not Used)

END OF SECTION 012500

SECTION 013100 - PROJECT MANAGEMENT AND COORDINATION

PART 1 - GENERAL

1.1 SUMMARY

A. Section includes administrative provisions for coordinating construction operations on Project including, but not limited to, the following:
   1. Requests for Information (RFIs).
   2. Project meetings.

B. Related Requirements:
   1. Section 017300 "Execution" for procedures for coordinating general installation and field-engineering services, including establishment of benchmarks and control points.

1.2 DEFINITIONS

A. RFI: Request from Owner, Architect, or Contractor seeking information required by or clarifications of the Contract Documents.

1.3 INFORMATIONAL SUBMITTALS

A. Subcontract List: Prepare a written summary identifying individuals or firms proposed for each portion of the Work, including those who are to furnish products or equipment fabricated to a special design. Include the following information in tabular form:
   1. Name, address, and telephone number of entity performing subcontract or supplying products.
   2. Number and title of related Specification Section(s) covered by subcontract.
   3. Drawing number and detail references, as appropriate, covered by subcontract.

1.4 GENERAL COORDINATION PROCEDURES

A. Coordination: Coordinate construction operations included in different Sections of the Specifications to ensure efficient and orderly installation of each part of the Work. Coordinate construction operations, included in different Sections, that depend on each other for proper installation, connection, and operation.
   1. Schedule construction operations in sequence required to obtain the best results where installation of one part of the Work depends on installation of other components, before or after its own installation.
   2. Coordinate installation of different components to ensure maximum performance and accessibility for required maintenance, service, and repair.
   3. Make adequate provisions to accommodate items scheduled for later installation.

B. Prepare memoranda for distribution to each party involved, outlining special procedures required for coordination. Include such items as required notices, reports, and list of attendees at meetings.
   1. Prepare similar memoranda for Owner and separate contractors if coordination of their Work is required.

C. Administrative Procedures: Coordinate scheduling and timing of required administrative procedures with other construction activities to avoid conflicts and to ensure orderly progress of the Work. Such administrative activities include, but are not limited to, the following:
   1. Preparation of Contractor's construction schedule.
   2. Preparation of the schedule of values.
   3. Installation and removal of temporary facilities and controls.
   4. Delivery and processing of submittals.
   5. Progress meetings.
   6. Preinstallation conferences.
   7. Project closeout activities.
   8. Startup and adjustment of systems.

1.5 REQUESTS FOR INFORMATION (RFIs)

A. General: Immediately on discovery of the need for additional information or interpretation of the Contract Documents, Contractor shall prepare and submit an RFI in the form specified.
   1. Architect will return RFIs submitted to Architect by other entities controlled by Contractor with no response.
   2. Coordinate and submit RFIs in a prompt manner so as to avoid delays in Contractor's work or work of subcontractors.

B. Content of the RFI: Include a detailed, legible description of item needing information or interpretation and the following:
   1. Project name.
   2. Project number.
   3. Date.
   4. Name of Contractor.
   5. Name of Architect.
   6. RFI number, numbered sequentially.
   7. RFI subject.
   8. Specification Section number and title and related paragraphs, as appropriate.
   9. Drawing number and detail references, as appropriate.
   10. Field dimensions and conditions, as appropriate.
   11. Contractor's suggested resolution. If Contractor's solution(s) impacts the Contract Time or the Contract Sum, Contractor shall state impact in the RFI.
   12. Contractor's signature.
   13. Attachments: Include sketches, descriptions, measurements, photos, Product Data, Shop Drawings, coordination drawings, and other information necessary to fully describe items needing interpretation.

C. RFI Forms: AIA Document G716 or software-generated form with substantially the same content as indicated above, acceptable to Architect.

D. Architect's Action: Architect will review each RFI, determine action required, and respond. Allow seven working days for Architect's response for each RFI. RFIs received by Architect after 1:00 p.m. will be considered as received the following working day.
   1. The following RFIs will be returned without action:
      a. Requests for approval of submittals.
      b. Requests for approval of substitutions.
      c. Requests for coordination information already indicated in the Contract Documents.
      d. Requests for adjustments in the Contract Time or the Contract Sum.
      e. Requests for interpretation of Architect's actions on submittals.
      f. Incomplete RFIs or inaccurately prepared RFIs.
   2. Architect's action may include a request for additional information, in which case Architect's time for response will date from time of receipt of additional information.
   3. Architect's action on RFIs that may result in a change to the Contract Time or the Contract Sum may be eligible for Contractor to submit Change Proposal.
      a. If Contractor believes the RFI response warrants change in the Contract Time or the Contract Sum, notify Architect in writing within 10 days of receipt of the RFI response.

E. RFI Log: Prepare, maintain, and submit a tabular log of RFIs organized by the RFI number. Submit log weekly. Include the following:
   1. Project name.
   2. Name and address of Contractor.
   3. Name and address of Architect.
   4. RFI number including RFIs that were dropped and not submitted.
   5. RFI description.
   6. Date the RFI was submitted.
   7. Date Architect's response was received.

F. On receipt of Architect's action, update the RFI log and immediately distribute the RFI response to affected parties. Review response and notify Architect within seven days if Contractor disagrees with response.
   1. Identification of related Minor Change in the Work, Construction Change Directive, and Proposal Request, as appropriate.
   2. Identification of related Field Order, Work Change Directive, and Proposal Request, as appropriate.

1.6 PROJECT MEETINGS

A. General: Schedule and conduct meetings and conferences at Project site unless otherwise indicated.

1. Attendees: Inform participants and others involved, and individuals whose presence is required, of date and time of each meeting. Notify Owner and Architect of scheduled meeting dates and times.
2. Agenda: Prepare the meeting agenda. Distribute the agenda to all invited attendees.
3. Minutes: Entity responsible for conducting meeting will record significant discussions and agreements achieved. Distribute the meeting minutes to everyone concerned, including Owner and Architect, within three days of the meeting.

B. Preconstruction Conference: Schedule and conduct a preconstruction conference before starting construction, at a time convenient to Owner and Architect, but no later than 15 days after execution of the Agreement.
1. Attendees: Authorized representatives of Owner, Architect, and their consultants; Contractor and its superintendent; major subcontractors; suppliers; and other concerned parties shall attend the conference. Participants at the conference shall be familiar with Project and authorized to conclude matters relating to the Work.
2. Agenda: Discuss items of significance that could affect progress, including the following:
   a. Tentative construction schedule.
   b. Phasing.
   c. Critical work sequencing and long-lead items.
   d. Designation of key personnel and their duties.
   e. Procedures for processing field decisions and Change Orders.
   f. Procedures for RFIs.
   g. Procedures for testing and inspecting.
   h. Procedures for processing Applications for Payment.
   i. Distribution of the Contract Documents.
   j. Submittal procedures.
   k. Preparation of record documents.
   l. Use of the premises.
   m. Work restrictions.
   n. Working hours.
   o. Responsibility for temporary facilities and controls.
   p. Procedures for moisture and mold control.
   q. Procedures for disruptions and shutdowns.
   r. Construction waste management and recycling.
   s. Parking availability.
   t. Office, work, and storage areas.
   u. Equipment deliveries and priorities.
   v. First aid.
   w. Security.
   x. Progress cleaning.

3. Minutes: Entity responsible for conducting meeting will record and distribute meeting minutes.

C. Preinstallation Conferences: Conduct a preinstallation conference at Project site before each construction activity that requires coordination with other construction.
   1. Attendees: Installer and representatives of manufacturers and fabricators involved in or affected by the installation and its coordination or integration with other materials and installations that have preceded or will follow, shall attend the meeting. Advise Architect of scheduled meeting dates.
   2. Agenda: Review progress of other construction activities and preparations for the particular activity under consideration, including requirements for the following:
      a. Contract Documents.
      b. Options.
      c. Related RFIs.
      d. Related Change Orders.
      e. Purchases.
      f. Deliveries.
      g. Submittals.
      h. Review of mockups.
      i. Possible conflicts.
      j. Compatibility problems.
      k. Time schedules.
      l. Weather limitations.
      m. Manufacturer's written instructions.
      n. Warranty requirements.
      o. Compatibility of materials.
      p. Acceptability of substrates.
      q. Temporary facilities and controls.
      r. Space and access limitations.
      s. Regulations of authorities having jurisdiction.
      t. Testing and inspecting requirements.
      u. Installation procedures.
      v. Coordination with other work.
      w. Required performance results.
      x. Protection of adjacent work.
      y. Protection of construction and personnel.
   3. Record significant conference discussions, agreements, and disagreements, including required corrective measures and actions.
   4. Reporting: Distribute minutes of the meeting to each party present and to other parties requiring information.
   5. Do not proceed with installation if the conference cannot be successfully concluded. Initiate whatever actions are necessary to resolve impediments to performance of the Work and reconvene the conference at earliest feasible date.

D. Progress Meetings: Conduct progress meetings at weekly intervals.
   1. Attendees: In addition to representatives of Owner and Architect, each contractor, subcontractor, supplier, and other entity concerned with current progress or involved in planning, coordination, or performance of future activities shall be represented at these meetings. All participants at the meeting shall be familiar with Project and authorized to conclude matters relating to the Work.

2. Agenda: Review and correct or approve minutes of previous progress meeting. Review other items of significance that could affect progress. Include topics for discussion as appropriate to status of Project.
   a. Contractor's Construction Schedule: Review progress since the last meeting. Determine whether each activity is on time, ahead of schedule, or behind schedule, in relation to Contractor's construction schedule. Determine how construction behind schedule will be expedited; secure commitments from parties involved to do so. Discuss whether schedule revisions are required to ensure that current and subsequent activities will be completed within the Contract Time.
      1) Review schedule for next period.
   b. Review present and future needs of each entity present, including the following:
      1) Interface requirements.
      2) Sequence of operations.
      3) Status of submittals.
      4) Deliveries.
      5) Off-site fabrication.
      6) Access.
      7) Site utilization.
      8) Temporary facilities and controls.
      9) Progress cleaning.
      10) Quality and work standards.
      11) Status of correction of deficient items.
      12) Field observations.
      13) Status of RFIs.
      14) Status of proposal requests.
      15) Pending changes.
      16) Status of Change Orders.
      17) Pending claims and disputes.
      18) Documentation of information for payment requests.
3. Minutes: Entity responsible for conducting the meeting will record and distribute the meeting minutes to each party present and to parties requiring information.
   a. Schedule Updating: Revise Contractor's construction schedule after each progress meeting where revisions to the schedule have been made or recognized. Issue revised schedule concurrently with the report of each meeting.

PART 2 - PRODUCTS (Not Used)

PART 3 - EXECUTION (Not Used)

END OF SECTION 013100

SECTION 013300 - SUBMITTAL PROCEDURES

PART 1 - GENERAL

1.1 SUMMARY

A. Section includes requirements for the submittal schedule and administrative and procedural requirements for submitting Shop Drawings, Product Data, Samples, and other submittals.

1.2 DEFINITIONS

A. Action Submittals: Written and graphic information and physical samples that require Architect's responsive action.

B. Informational Submittals: Written and graphic information and physical samples that do not require Architect's[and Construction Manager's] responsive action. Submittals may be rejected for not complying with requirements.

1.3 ACTION SUBMITTALS

A. Submittal Schedule: Submit a schedule of submittals, arranged in chronological order by dates required by construction schedule. Include time required for review, ordering, manufacturing, fabrication, and delivery when establishing dates. Include additional time required for making corrections or revisions to submittals noted by Architect[and Construction Manager] and additional time for handling and reviewing submittals required by those corrections.

1.4 SUBMITTAL ADMINISTRATIVE REQUIREMENTS

A. Architect's Digital Data Files: Electronic copies of digital data files of the Contract Drawings will not be provided by Architect for Contractor's use in preparing submittals.

B. Coordination: Coordinate preparation and processing of submittals with performance of construction activities.
   1. Coordinate each submittal with fabrication, purchasing, testing, delivery, other submittals, and related activities that require sequential activity.
   2. Coordinate transmittal of different types of submittals for related parts of the Work so processing will not be delayed because of need to review submittals concurrently for coordination.
      a. Architect reserves the right to withhold action on a submittal requiring coordination with other submittals until related submittals are received.

C. Processing Time: Allow time for submittal review, including time for resubmittals, as follows. Time for review shall commence on Architect's receipt of submittal. No extension of the Contract Time will be authorized because of failure to transmit submittals enough in advance of the Work to permit processing, including resubmittals.
   1. Initial Review: Allow 15 days for initial review of each submittal. Allow additional time if coordination with subsequent submittals is required. Architect will advise Contractor when a submittal being processed must be delayed for coordination.
   2. Intermediate Review: If intermediate submittal is necessary, process it in same manner as initial submittal.
   3. Resubmittal Review: Allow 15 days for review of each resubmittal.

D. Electronic Submittals: Identify and incorporate information in each electronic submittal file as follows:
   1. Assemble complete submittal package into a single indexed file incorporating submittal requirements of a single Specification Section and transmittal form with links enabling navigation to each item.
   2. Name file with submittal number or other unique identifier, including revision identifier.
      a. File name shall use project identifier and Specification Section number followed by a decimal point and then a sequential number (e.g., LNHS-061000.01). Resubmittals shall include an alphabetic suffix after another decimal point (e.g., LNHS-061000.01.A).
   3. Provide means for insertion to permanently record Contractor's review and approval markings and action taken by Architect.
   4. Transmittal Form for Electronic Submittals: Use software-generated form from electronic project management software or an electronic form acceptable to Owner, containing the following information:
      a. Project name.
      b. Date.
      c. Name and address of Architect.
      d. Name of Contractor.
      e. Name of firm or entity that prepared submittal.
      f. Names of subcontractor, manufacturer, and supplier.
      g. Category and type of submittal.
      h. Submittal purpose and description.
      i. Specification Section number and title.
      j. Specification paragraph number or drawing designation and generic name for each of multiple items.
      k. Drawing number and detail references, as appropriate.
      l. Location(s) where product is to be installed, as appropriate.
      m. Related physical samples submitted directly.
      n. Indication of full or partial submittal.
      o. Transmittal number, numbered consecutively.
      p. Submittal and transmittal distribution record.
      q. Other necessary identification.
      r. Remarks.
   5. Metadata: Include the following information as keywords in the electronic submittal file metadata:

a. Project name.
b. Number and title of appropriate Specification Section.
c. Manufacturer name.
d. Product name.

E. Options: Identify options requiring selection by Architect.

F. Deviations: Identify deviations from the Contract Documents on submittals.

G. Resubmittals: Make resubmittals in same form and number of copies as initial submittal.
1. Note date and content of previous submittal.
2. Note date and content of revision in label or title block and clearly indicate extent of revision.
3. Resubmit submittals until they are marked with approval notation from Architect's action stamp.

H. Distribution: Furnish copies of final submittals to manufacturers, subcontractors, suppliers, fabricators, installers, authorities having jurisdiction, and others as necessary for performance of construction activities. Show distribution on transmittal forms.

I. Use for Construction: Retain complete copies of submittals on Project site. Use only final action submittals that are marked with approval notation from Architect's[and Construction Manager's] action stamp.

PART 2 - PRODUCTS

2.1 SUBMITTAL PROCEDURES

A. General Submittal Procedure Requirements:
1. Submit electronic submittals via email as PDF electronic files.
a. Architect will return annotated file. Annotate and retain one copy of file as an electronic Project record document file.

B. Product Data: Collect information into a single submittal for each element of construction and type of product or equipment.
1. If information must be specially prepared for submittal because standard published data are not suitable for use, submit as Shop Drawings, not as Product Data.
2. Mark each copy of each submittal to show which products and options are applicable.
3. Include the following information, as applicable:
a. Manufacturer's catalog cuts.
b. Manufacturer's product specifications.
c. Standard color charts.
d. Statement of compliance with specified referenced standards.
e. Testing by recognized testing agency.

f. Application of testing agency labels and seals.
g. Notation of coordination requirements.
h. Availability and delivery time information.

4. For equipment, include the following in addition to the above, as applicable:
   a. Wiring diagrams showing factory-installed wiring.
   b. Printed performance curves.
   c. Operational range diagrams.
   d. Clearances required to other construction, if not indicated on accompanying Shop Drawings.
5. Submit Product Data before or concurrent with Samples.
6. Submit Product Data in the following format:
   a. PDF electronic file.

C. Shop Drawings: Prepare Project-specific information, drawn accurately to scale. Do not base Shop Drawings on reproductions of the Contract Documents or standard printed data.
1. Preparation: Fully illustrate requirements in the Contract Documents. Include the following information, as applicable:
   a. Identification of products.
   b. Schedules.
   c. Compliance with specified standards.
   d. Notation of coordination requirements.
   e. Notation of dimensions established by field measurement.
   f. Relationship and attachment to adjoining construction clearly indicated.
   g. Seal and signature of professional engineer if specified.
2. Submit Shop Drawings in the following format:
   a. PDF electronic file.

D. Samples: Submit Samples for review of kind, color, pattern, and texture for a check of these characteristics with other elements and for a comparison of these characteristics between submittal and actual component as delivered and installed.
1. Transmit Samples that contain multiple, related components such as accessories together in one submittal package.
2. Identification: Attach label on unexposed side of Samples that includes the following:
   a. Generic description of Sample.
   b. Product name and name of manufacturer.
   c. Sample source.
   d. Number and title of applicable Specification Section.
3. For electronic submittals, provide corresponding electronic submittal of Sample transmittal, digital image file illustrating Sample characteristics, and identification information for record.
4. Disposition: Maintain sets of approved Samples at Project site, available for quality-control comparisons throughout the course of construction activity. Sample sets may be used to determine final acceptance of construction associated with each set.
   a. Samples that may be incorporated into the Work are indicated in individual Specification Sections. Such Samples must be in an undamaged condition at time of use.

b. Samples not incorporated into the Work, or otherwise designated as Owner's property, are the property of Contractor.

5. Samples for Verification: Submit full-size units or Samples of size indicated, prepared from same material to be used for the Work, cured and finished in manner specified, and physically identical with material or product proposed for use, and that show full range of color and texture variations expected. Samples include, but are not limited to, the following: partial sections of manufactured or fabricated components; small cuts or containers of materials; complete units of repetitively used materials; swatches showing color, texture, and pattern; color range sets; and components used for independent testing and inspection.
   a. Number of Samples: Submit three sets of Samples. Architect will retain two Sample sets; remainder will be returned.
      1) If variation in color, pattern, texture, or other characteristic is inherent in material or product represented by a Sample, submit at least three sets of paired units that show approximate limits of variations.

E. Product Schedule: As required in individual Specification Sections, prepare a written summary indicating types of products required for the Work and their intended location. Include the following information in tabular form:
   1. Submit product schedule in the following format:
      a. PDF electronic file.

F. Contractor's Construction Schedule: Comply with requirements specified in Section 013200 "Construction Progress Documentation."

G. Application for Payment and Schedule of Values: Comply with requirements specified in Section 012900 "Payment Procedures.

H. Test and Inspection Reports and Schedule of Tests and Inspections Submittals: Comply with requirements specified in Section 014000 "Quality Requirements."

I. Closeout Submittals and Maintenance Material Submittals: Comply with requirements specified in Section 017700 "Closeout Procedures."

J. Qualification Data: Prepare written information that demonstrates capabilities and experience of firm or person. Include lists of completed projects with project names and addresses, contact information of architects and owners, and other information specified.

K. Welding Certificates: Prepare written certification that welding procedures and personnel comply with requirements in the Contract Documents. Submit record of Welding Procedure Specification and Procedure Qualification Record on AWS forms. Include names of firms and personnel certified.

L. Installer Certificates: Submit written statements on manufacturer's letterhead certifying that Installer complies with requirements in the Contract Documents and, where required, is authorized by manufacturer for this specific Project.

M. Manufacturer Certificates: Submit written statements on manufacturer's letterhead certifying that manufacturer complies with requirements in the Contract Documents. Include evidence of manufacturing experience where required.

N. Product Certificates: Submit written statements on manufacturer's letterhead certifying that product complies with requirements in the Contract Documents.

O. Material Certificates: Submit written statements on manufacturer's letterhead certifying that material complies with requirements in the Contract Documents.

P. Material Test Reports: Submit reports written by a qualified testing agency, on testing agency's standard form, indicating and interpreting test results of material for compliance with requirements in the Contract Documents.

Q. Product Test Reports: Submit written reports indicating that current product produced by manufacturer complies with requirements in the Contract Documents. Base reports on evaluation of tests performed by manufacturer and witnessed by a qualified testing agency, or on comprehensive tests performed by a qualified testing agency.

R. Research Reports: Submit written evidence, from a model code organization acceptable to authorities having jurisdiction, that product complies with building code in effect for Project.

S. Schedule of Tests and Inspections: Comply with requirements specified in Section 014000 "Quality Requirements."

T. Preconstruction Test Reports: Submit reports written by a qualified testing agency, on testing agency's standard form, indicating and interpreting results of tests performed before installation of product, for compliance with performance requirements in the Contract Documents.

U. Compatibility Test Reports: Submit reports written by a qualified testing agency, on testing agency's standard form, indicating and interpreting results of compatibility tests performed before installation of product. Include written recommendations for primers and substrate preparation needed for adhesion.

V. Field Test Reports: Submit written reports indicating and interpreting results of field tests performed either during installation of product or after product is installed in its final location, for compliance with requirements in the Contract Documents.

W. Design Data: Prepare and submit written and graphic information, including, but not limited to, performance and design criteria, list of applicable codes and regulations, and calculations. Include list of assumptions and other performance and design criteria and a summary of loads. Include load diagrams if applicable. Provide name and version of software, if any, used for calculations. Include page numbers.

2.2 DELEGATED-DESIGN SERVICES

A. Performance and Design Criteria: Where professional design services or certifications by a design professional are specifically required of Contractor by the Contract Documents, provide products and systems complying with specific performance and design criteria indicated.
   1. If criteria indicated are not sufficient to perform services or certification required, submit a written request for additional information to Architect.

B. Delegated-Design Services Certification: In addition to Shop Drawings, Product Data, and other required submittals, submit digitally signed PDF electronic file and three paper copies of certificate, signed and sealed by the responsible design professional, for each product and system specifically assigned to Contractor to be designed or certified by a design professional.
   1. Indicate that products and systems comply with performance ad design criteria in the Contract Documents. Include list of codes, loads, and other factors used in performing these services.

PART 3 - EXECUTION

3.1 CONTRACTOR'S REVIEW

A. Action and Informational Submittals: Review each submittal and check for coordination with other Work of the Contract and for compliance with the Contract Documents. Note corrections and field dimensions. Mark with approval stamp before submitting to Architect.

B. Project Closeout and Maintenance Material Submittals: See requirements in Section 017700 "Closeout Procedures."

C. Approval Stamp: Stamp each submittal with a uniform, approval stamp. Include Project name and location, submittal number, Specification Section title and number, name of reviewer, date of Contractor's approval, and statement certifying that submittal has been reviewed, checked, and approved for compliance with the Contract Documents.

3.2 ARCHITECT'S ACTION

A. General: Architect will not review submittals that do not bear Contractor's approval stamp and will return them without action.

B. Action Submittals: Architect will review each submittal, make marks to indicate corrections or revisions required, and return it. Architect will stamp each submittal with an action stamp and will mark stamp appropriately to indicate action.

C. Informational Submittals: Architect will review each submittal and will not return it, or will return it if it does not comply with requirements. Architect will forward each submittal to appropriate party.

D. Incomplete submittals are unacceptable, will be considered nonresponsive, and will be returned for resubmittal without review.

E. Submittals not required by the Contract Documents may not be reviewed and may be discarded.

END OF SECTION 013300

SECTION 014000 - QUALITY REQUIREMENTS

PART 1 - GENERAL

1.1 SUMMARY

A. Section includes administrative and procedural requirements for quality assurance and quality control.

B. Testing and inspecting services are required to verify compliance with requirements specified or indicated. These services do not relieve Contractor of responsibility for compliance with the Contract Document requirements.
   1. Specified tests, inspections, and related actions do not limit Contractor's other quality-assurance and -control procedures that facilitate compliance with the Contract Document requirements.
   2. Requirements for Contractor to provide quality-assurance and -control services required by Architect, Owner, or authorities having jurisdiction are not limited by provisions of this Section.
   3. Specific test and inspection requirements are not specified in this Section.

1.2 DEFINITIONS

A. Quality-Assurance Services: Activities, actions, and procedures performed before and during execution of the Work to guard against defects and deficiencies and substantiate that proposed construction will comply with requirements.

B. Quality-Control Services: Tests, inspections, procedures, and related actions during and after execution of the Work to evaluate that actual products incorporated into the Work and completed construction comply with requirements. Services do not include contract enforcement activities performed by Architect.

C. Mockups: Full-size physical assemblies that are constructed on-site. Mockups are constructed to verify selections made under Sample submittals; to demonstrate aesthetic effects and, where indicated, qualities of materials and execution; to review coordination, testing, or operation; to show interface between dissimilar materials; and to demonstrate compliance with specified installation tolerances. Mockups are not Samples. Unless otherwise indicated, approved mockups establish the standard by which the Work will be judged.

D. Preconstruction Testing: Tests and inspections performed specifically for Project before products and materials are incorporated into the Work, to verify performance or compliance with specified criteria.

E. Product Testing: Tests and inspections that are performed by an NRTL, an NVLAP, or a testing agency qualified to conduct product testing and acceptable to authorities having jurisdiction, to establish product performance and compliance with specified requirements.

F. Source Quality-Control Testing: Tests and inspections that are performed at the source, e.g., plant, mill, factory, or shop.

G. Field Quality-Control Testing: Tests and inspections that are performed on-site for installation of the Work and for completed Work.

H. Testing Agency: An entity engaged to perform specific tests, inspections, or both. Testing laboratory shall mean the same as testing agency.

I. Installer/Applicator/Erector: Contractor or another entity engaged by Contractor as an employee, Subcontractor, or Sub-subcontractor, to perform a particular construction operation, including installation, erection, application, and similar operations.
   1. Use of trade-specific terminology in referring to a trade or entity does not require that certain construction activities be performed by accredited or unionized individuals, or that requirements specified apply exclusively to specific trade(s).

J. Experienced: When used with an entity or individual, "experienced" means having successfully completed a minimum of five previous projects similar in nature, size, and extent to this Project; being familiar with special requirements indicated; and having complied with requirements of authorities having jurisdiction.

1.3 CONFLICTING REQUIREMENTS

A. Referenced Standards: If compliance with two or more standards is specified and the standards establish different or conflicting requirements for minimum quantities or quality levels, comply with the most stringent requirement. Refer conflicting requirements that are different, but apparently comparable, to Architect for a decision before proceeding.

B. Minimum Quantity or Quality Levels: The quantity or quality level shown or specified shall be the minimum provided or performed. The actual installation may comply exactly with the minimum quantity or quality specified, or it may exceed the minimum within reasonable limits. To comply with these requirements, indicated numeric values are minimum or maximum, as appropriate, for the context of requirements. Refer uncertainties to Architect for a decision before proceeding.

1.4 INFORMATIONAL SUBMITTALS

A. Contractor's Statement of Responsibility: When required by authorities having jurisdiction, submit copy of written statement of responsibility sent to authorities having jurisdiction before starting work on the following systems:
   1. Main wind-force-resisting system or a wind-resisting component listed in the wind-force-resisting system quality-assurance plan prepared by Architect.

B. Testing Agency Qualifications: For testing agencies specified in "Quality Assurance" Article to demonstrate their capabilities and experience. Include proof of qualifications in the form of a recent report on the inspection of the testing agency by a recognized authority.

1.5 REPORTS AND DOCUMENTS

A. Test and Inspection Reports: Prepare and submit certified written reports specified in other Sections. Include the following:
   1. Date of issue.
   2. Project title and number.
   3. Name, address, and telephone number of testing agency.
   4. Dates and locations of samples and tests or inspections.
   5. Names of individuals making tests and inspections.
   6. Description of the Work and test and inspection method.
   7. Identification of product and Specification Section.
   8. Complete test or inspection data.
   9. Test and inspection results and an interpretation of test results.
   10. Record of temperature and weather conditions at time of sample taking and testing and inspecting.
   11. Comments or professional opinion on whether tested or inspected Work complies with the Contract Document requirements.
   12. Name and signature of laboratory inspector.
   13. Recommendations on retesting and reinspecting.

B. Manufacturer's Field Reports: Prepare written information documenting tests and inspections specified in other Sections. Include the following:
   1. Name, address, and telephone number of representative making report.
   2. Statement on condition of substrates and their acceptability for installation of product.
   3. Summary of installation procedures being followed, whether they comply with requirements and, if not, what corrective action was taken.
   4. Results of operational and other tests and a statement of whether observed performance complies with requirements.
   5. Other required items indicated in individual Specification Sections.

C. Permits, Licenses, and Certificates: For Owner's records, submit copies of permits, licenses, certifications, inspection reports, releases, jurisdictional settlements, notices, receipts for fee payments, judgments, correspondence, records, and similar documents, established for compliance with standards and regulations bearing on performance of the Work.

1.6 QUALITY ASSURANCE

A. General: Qualifications paragraphs in this article establish the minimum qualification levels required; individual Specification Sections specify additional requirements.

B. Manufacturer Qualifications: A firm experienced in manufacturing products or systems similar to those indicated for this Project and with a record of successful in-service performance, as well as sufficient production capacity to produce required units.

C. Fabricator Qualifications: A firm experienced in producing products similar to those indicated for this Project and with a record of successful in-service performance, as well as sufficient production capacity to produce required units.

D. Installer Qualifications: A firm or individual experienced in installing, erecting, or assembling work similar in material, design, and extent to that indicated for this Project, whose work has resulted in construction with a record of successful in-service performance.

E. Professional Engineer Qualifications: A professional engineer who is legally qualified to practice in jurisdiction where Project is located and who is experienced in providing engineering services of the kind indicated. Engineering services are defined as those performed for installations of the system, assembly, or product that are similar in material, design, and extent to those indicated for this Project.

F. Specialists: Certain Specification Sections require that specific construction activities shall be performed by entities who are recognized experts in those operations. Specialists shall satisfy qualification requirements indicated and shall be engaged for the activities indicated.
   1. Requirements of authorities having jurisdiction shall supersede requirements for specialists.

G. Testing Agency Qualifications: An NRTL, an NVLAP, or an independent agency with the experience and capability to conduct testing and inspecting indicated, as documented according to ASTM E 329; and with additional qualifications specified in individual Sections; and, where required by authorities having jurisdiction, that is acceptable to authorities.
   1. NRTL: A nationally recognized testing laboratory according to 29 CFR 1910.7.
   2. NVLAP: A testing agency accredited according to NIST's National Voluntary Laboratory Accreditation Program.

H. Manufacturer's Representative Qualifications: An authorized representative of manufacturer who is trained and approved by manufacturer to observe and inspect installation of manufacturer's products that are similar in material, design, and extent to those indicated for this Project.

I. Preconstruction Testing: Where testing agency is indicated to perform preconstruction testing for compliance with specified requirements for performance and test methods, comply with the following:
   1. Contractor responsibilities include the following:
      a. Provide test specimens representative of proposed products and construction.
      b. Submit specimens in a timely manner with sufficient time for testing and analyzing results to prevent delaying the Work.
      c. Build laboratory mockups at testing facility using personnel, products, and methods of construction indicated for the completed Work.
      d. When testing is complete, remove test specimens, assemblies, and]mockups; do not reuse products on Project.
   2. Testing Agency Responsibilities: Submit a certified written report of each test, inspection, and similar quality-assurance service to Architect, with copy to Contractor. Interpret tests and inspections and state in each report whether tested and inspected work complies with or deviates from the Contract Documents.

J. Mockups: Before installing portions of the Work requiring mockups, build mockups for each form of construction and finish required to comply with the following requirements, using materials indicated for the completed Work:
   1. Build mockups in location and of size indicated or, if not indicated, as directed by Architect.
   2. Notify Architect seven days in advance of dates and times when mockups will be constructed.
   3. Demonstrate the proposed range of aesthetic effects and workmanship.
   4. Obtain Architect's approval of mockups before starting work, fabrication, or construction.
      a. Allow seven days for initial review and each re-review of each mockup.
   5. Maintain mockups during construction in an undisturbed condition as a standard for judging the completed Work.
   6. Demolish and remove mockups when directed unless otherwise indicated.

1.7 QUALITY CONTROL

A. Owner Responsibilities: Where quality-control services are indicated as Owner's responsibility, Owner will engage a qualified testing agency to perform these services.
   1. Owner will furnish Contractor with names, addresses, and telephone numbers of testing agencies engaged and a description of types of testing and inspecting they are engaged to perform.
   2. Costs for retesting and reinspecting construction that replaces or is necessitated by work that failed to comply with the Contract Documents will be charged to Contractor, and the Contract Sum will be adjusted by Change Order.

B. Contractor Responsibilities: Tests and inspections not explicitly assigned to Owner are Contractor's responsibility. Perform additional quality-control activities required to verify that the Work complies with requirements, whether specified or not.
   1. Where services are indicated as Contractor's responsibility, engage a qualified testing agency to perform these quality-control services.
      a. Contractor shall not employ same entity engaged by Owner, unless agreed to in writing by Owner.
   2. Notify testing agencies at least 24 hours in advance of time when Work that requires testing or inspecting will be performed.
   3. Where quality-control services are indicated as Contractor's responsibility, submit a certified written report, in duplicate, of each quality-control service.
   4. Testing and inspecting requested by Contractor and not required by the Contract Documents are Contractor's responsibility.
   5. Submit additional copies of each written report directly to authorities having jurisdiction, when they so direct.

C. Manufacturer's Field Services: Where indicated, engage a manufacturer's representative to observe and inspect the Work. Manufacturer's representative's services include examination of substrates and conditions, verification of materials, inspection of completed portions of the Work, and submittal of written reports.

D. Retesting/Reinspecting: Regardless of whether original tests or inspections were Contractor's responsibility, provide quality-control services, including retesting and

reinspecting, for construction that replaced Work that failed to comply with the Contract Documents.

E. Testing Agency Responsibilities: Cooperate with Architect and Contractor in performance of duties. Provide qualified personnel to perform required tests and inspections.
   1. Notify Architect and Contractor promptly of irregularities or deficiencies observed in the Work during performance of its services.
   2. Determine the location from which test samples will be taken and in which in-situ tests are conducted.
   3. Conduct and interpret tests and inspections and state in each report whether tested and inspected work complies with or deviates from requirements.
   4. Submit a certified written report, in duplicate, of each test, inspection, and similar quality-control service through Contractor.
   5. Do not release, revoke, alter, or increase the Contract Document requirements or approve or accept any portion of the Work.
   6. Do not perform any duties of Contractor.

F. Associated Services: Cooperate with agencies performing required tests, inspections, and similar quality-control services, and provide reasonable auxiliary services as requested. Notify agency sufficiently in advance of operations to permit assignment of personnel. Provide the following:
   1. Access to the Work.
   2. Incidental labor and facilities necessary to facilitate tests and inspections.
   3. Adequate quantities of representative samples of materials that require testing and inspecting. Assist agency in obtaining samples.
   4. Facilities for storage and field curing of test samples.
   5. Delivery of samples to testing agencies.
   6. Preliminary design mix proposed for use for material mixes that require control by testing agency.
   7. Security and protection for samples and for testing and inspecting equipment at Project site.

G. Coordination: Coordinate sequence of activities to accommodate required quality-assurance and -control services with a minimum of delay and to avoid necessity of removing and replacing construction to accommodate testing and inspecting.

   1. Schedule times for tests, inspections, obtaining samples, and similar activities.

1.8 SPECIAL TESTS AND INSPECTIONS

A. Special Tests and Inspections: Conducted by a qualified testing agency as required by authorities having jurisdiction, as indicated in individual Specification Sections, and as follows:
   1. Verifying that manufacturer maintains detailed fabrication and quality-control procedures and reviews the completeness and adequacy of those procedures to perform the Work.
   2. Notifying Architect and Contractor promptly of irregularities and deficiencies observed in the Work during performance of its services.

3. Submitting a certified written report of each test, inspection, and similar quality-control service to Architect with copy to Contractor and to authorities having jurisdiction.
4. Submitting a final report of special tests and inspections at Substantial Completion, which includes a list of unresolved deficiencies.
5. Interpreting tests and inspections and stating in each report whether tested and inspected work complies with or deviates from the Contract Documents.
6. Retesting and reinspecting corrected work.

PART 2 - PRODUCTS (Not Used)

PART 3 - EXECUTION

3.1 TEST AND INSPECTION LOG

A. Test and Inspection Log: Prepare a record of tests and inspections. Include the following:
   1. Date test or inspection was conducted.
   2. Description of the Work tested or inspected.
   3. Date test or inspection results were transmitted to Architect.
   4. Identification of testing agency or special inspector conducting test or inspection.

B. Maintain log at Project site. Post changes and revisions as they occur. Provide access to test and inspection log for Architect's reference during normal working hours.

3.2 REPAIR AND PROTECTION

A. General: On completion of testing, inspecting, sample taking, and similar services, repair damaged construction and restore substrates and finishes.
   1. Provide materials and comply with installation requirements specified in other Specification Sections or matching existing substrates and finishes. Restore patched areas and extend restoration into adjoining areas with durable seams that are as invisible as possible. Comply with the Contract Document requirements for cutting and patching in Section 017300 "Execution."

B. Protect construction exposed by or for quality-control service activities.

C. Repair and protection are Contractor's responsibility, regardless of the assignment of responsibility for quality-control services.

END OF SECTION 014000

SECTION 014100 – TESTING LABORATORY SERVICES

PART 1 - General

1.1 DESCRIPTION OF WORK

A. This Reference Specification covers the testing and observation of various structural materials to be tested during the course of construction.

B. The extent of the materials to be tested is shown in the Contract Documents. Furnish all labor, materials, services, equipment and hardware required in conjunction with or related to the testing of said materials.

C. Some states require buildings that meet certain criteria to be inspected during the course of construction by a Special Inspector (a/k/a “Threshold Inspector”).

1. Inspections services provided by the Special Inspector are not included in this Specification.
2. Items shown in this Specification marked with a “TI” are to be provided by the Special Inspector and are to be excluded from the Testing Laboratory’s scope of work. Exception: items marked with “TI” are to be included in the Testing Laboratory’s scope of work if the building is not classified as a Threshold Building according to state statutes.

D. The work to be performed by the Testing Laboratory shall be as specified in this Section, and as amended in meetings with the Owner, Architect, and Engineer. Note that this Specification is intended to be all inclusive and is not edited on a project by project basis. Therefore, the Laboratory shall only provide testing for those materials that are used on the Project. For example, Section 3.06 does not apply if there is no structural precast concrete on the Project. If in doubt as to the scope of work, submit a proposed scope to the Engineer for review.

1.2 DEFINITIONS

A. Contract Documents - The Structural AND Architectural drawings, and the drawings of the other design disciplines. The Contract Documents shall include all schedules, notes and details. Contract Documents may be amended during the course of construction via Bulletins, Requests for Information (RFI), supplemental sketches, etc. issued by the design team.

B. Load bearing Masonry – the masonry construction shown in the Structural Drawings. Non-load bearing partitions are those walls that are shown only in the Architectural Drawings.

1.3 REFERENCE STANDARDS

ASTM A416	Standard Specification for Steel Strand, Uncoated Seven-Wire for Prestressed Concrete
ASTM A615	Standard Specification for Deformed and Plain Carbon-Steel Bars for Concrete Reinforcement
ASTM C31	Standard Practice for Making and Curing Concrete Test Specimens in the Field
ASTM C33	Standard Specification for Concrete Aggregates
ASTM C39	Standard Test Method for Compressive Strength of Cylindrical Concrete Specimens
ASTM C42	Standard Test Method for Obtaining and Testing Drilled Cores and Sawed Beams of Concrete
ASTM C90	Standard Specification for Loadbearing Concrete Masonry Units
ASTM C140	Standard Test Methods for Sampling and Testing Concrete Masonry Units and Related Units
ASTM C143	Standard Test Method for Slump of Hydraulic Cement Concrete
ASTM C150	Standard Specification for Portland Cement
ASTM C172	Standard Practice for Sampling Freshly Mixed Concrete
ASTM C233	Standard Test Method for Air-Entraining Admixtures for Concrete
ASTM C270	Standard Specification for Mortar for Unit Masonry
ASTM C330	Standard Specification for Lightweight Aggregates for Structural Concrete
ASTM C780	Standard Test Method for Preconstruction and Construction Evaluation of Mortars for Plain and Reinforced Unit Masonry
ASTM D1556	Standard Test Method for Density and Unit Weight of Soil in Place by the Sand-Cone Method
ASTM D2167	Standard Test Method for Density and Unit Weight of Soil in Place by the Rubber Balloon Method
ASTM D2922	Standard Test Methods for Density of Soil and Soil-Aggregate in Place by Nuclear Methods (Shallow Depth)
ASTM E329	Standard Specification for Agencies Engaged in Construction Inspection and/or Testing

1.4 REPORTING

A. The Testing Laboratory shall submit reports of inspections and tests that contain, at a minimum, the following information:

1. Project Name
2. Date report issued
3. Testing Laboratory name and address
4. Name and signature of inspector
5. Date of inspection and sampling
6. Date of test
7. Identification of product and Specification section
8. Location in the project
9. Identification of inspection or test
10. Record of weather conditions and temperature (if applicable)
11. Results of test regarding compliance with Contract Documents

B. The Testing Laboratory shall submit copies of reports promptly and directly to the following parties:

1. Two (2) copies to the Owner or his representative
2. Two (2) copies to the General Contractor
3. One (1) copy to the Architect
4. One (1) copy to the Engineer of responsibility
5. One (1) copy to the Supplier of the material tested

1.5 QUALITY ASSURANCE

A. The Testing Laboratory is solely responsible for the quality control and quality assurance of the Testing Work, including sample collection and storage, equipment calibration, adequate visual inspections, etc.

B. Materials and operations are tested and inspected by the Owner as work progresses. Failure to detect defective work or material early will not prevent rejection if a defect is discovered later nor shall it obligate the Architect/Engineer for final acceptance. Inspection or testing by others shall in no way relieve the Contractor of his responsibility to perform the Work in accordance with the Contract Documents.

1.6 QUALIFICATIONS

A. The materials testing laboratory shall have a minimum of five (5) years' experience in the testing of materials used in building construction.

B. The field technicians and testing personnel shall have a minimum of three (3) years' experience in the collecting of test samples and the testing of materials used in building construction. Steel inspectors shall be certified in accordance with AWS QC-1.

C. The Testing Laboratory selected shall meet the basic requirements of ASTM E329 "Standard of Recommended Practice for Inspection and Testing Agencies for Concrete and Steel as Used in Construction".

D. The Testing Laboratory selected shall meet the "Recommended Requirements for Independent Laboratory Qualification", latest edition, as published by the American Council of Independent Laboratories.

E. Testing machines shall be calibrated at intervals not exceeding twelve (12) months by devices of accuracy traceable to the National Bureau of Standards or accepted values of natural physical constants.

F. Tests and inspections shall be conducted in accordance with specified requirements, and if not specified, in accordance with the applicable standards of the American Society for Testing and Materials or other recognized and accepted authorities in the field.

1.7 RESPONSIBILITIES OF THE PARTIES

A. Owner's Responsibilities

1. Select an independent testing laboratory to inspect and test the materials and methods of construction as specified herein. The purpose of the inspections is to verify compliance with the Specification requirements of the Contract Documents and to perform such other specialized technical services as may be required by the Owner or his representative.
2. The Owner shall pay for the testing services as described in this Specification. The Owner shall not pay for the testing and re-testing of materials that do not comply with the requirements of the Contract Documents.
3. The Owner shall review the scopes of work of the testing laboratory and the Special Inspector to ensure that there is no duplication of effort. The Owner shall confirm that items marked with "TI" in this Specification are included the services provided by the testing laboratory or the Special Inspector (one or the other must provide these services).

B. Contractor's Responsibilities

1. The Contractor shall cooperate with laboratory personnel; provide access to the work, and to manufacturers operations.
2. The Contractor shall provide to the laboratory representative, samples of materials proposed for use in the work in quantities sufficient for accurate testing as specified.
3. The Contractor shall furnish casual labor, equipment, and facilities as required for sampling and testing by the laboratory and otherwise facilitate all required inspections and tests.
4. The Contractor shall be responsible for notifying the Testing Laboratory sufficiently in advance of operations to allow for assignment of personnel and scheduling of tests.
5. The Contractor shall arrange with the Testing Laboratory and pay for any additional samples and tests above those required by the Contract Documents and as requested by the Contractor for his convenience in performing the work.
6. The Contractor shall pay for any additional inspections, sampling, testing, and re-testing as required when initial tests indicate work does not comply with the requirements of the Contract Documents. If in the opinion of the Owner, Architect, or Engineer any of the work of the Contractor is not satisfactory, the Contractor shall make all tests that the Owner, Architect, or Engineer deem advisable to determine its proper construction. The Owner shall pay all costs if the tests prove the questioned work to be satisfactory.
7. The Contractor shall provide the following at his expense:

    a. Soil surveys of the location of borrow soil materials, samples of existing soil materials, and delivery to the Testing Laboratory.
    b. Concrete mix designs as prepared by his concrete supplier
    c. Concrete coring, tests of below strength concrete, and load tests, if ordered by the Owner and/or Engineer.
    d. Welders' certifications
    e. Tests, samples, and mock-ups of substitute material where the substitution is requested by the Contractor and the tests are necessary in the opinion of the Owner, Architect or Engineer to establish equality with specified items.
    f. Any other tests when such costs are required by the Contract Documents to be paid by the Contractor.

g. The Contractor shall be responsible for notifying the Owner, Architect, Engineer, and Testing Laboratory when the source of any material is changed after the original tests or inspections have been made.

C. Testing Laboratory's Responsibilities

1. The Testing Laboratory shall obtain and review the project plans and specifications with the Architect and Engineer as soon as possible prior to the start of construction.
2. The Laboratory shall attend all pre-construction conferences as required to coordinate materials inspection and testing requirements with the planned construction schedule. The Laboratory will participate in such conferences throughout the course of the project.
3. The Testing Laboratory shall provide a detailed, written outline testing program. The testing program shall contain an outline of inspections and tests to be performed with reference to applicable sections of the specifications or drawings and a list of personnel assigned to each portion of the work. Such testing program shall be submitted to the Owner, Architect, and Engineer five (5) weeks in advance of the start of construction so as not to delay the start of construction.
4. The Testing Laboratory shall cooperate with the Architect, Engineer, and Contractor and provide qualified personnel promptly on notice.
5. The Laboratory shall perform the required inspections, sampling, and testing of materials as specified under each section and observe methods of construction for compliance with the requirements of the Contract Documents.
6. The Laboratory shall notify the Architect, Engineer, and Contractor first by telephone and then in writing of observed irregularities and deficiencies of the work and other conditions not in compliance with the requirements of the Contract Documents.
7. The Testing Laboratory shall be responsible for separating and billing costs attributed to the Owner and costs attributed to the Contractor.
8. The Testing Laboratory shall be responsible for obtaining all product and material certifications from manufacturers and suppliers as specified in these Specifications.
9. The Testing Laboratory is not authorized to revoke, alter, relax, enlarge upon, or release any requirements of the Specifications and Contract Documents, or to approve or accept any portion of the work or to perform any duties of the General Contractor and his Subcontractors.

PART 2 - PRODUCTS (NOT USED)

PART 3 - EXECUTION

3.1 EARTHWORK AND SUBGRADE

A. Materials Testing Of Sub-Grade Under Paved Areas and Building Slabs:

1. Frequency

a. Make at least one (1) field density test for every 2,500 square feet of paved area or building slab, but not less than three (3) tests.
b. Make at least one (1) field density test for every 2,500 square feet of building slab or paved area, but not less than three (3) tests, for each compacted fill layer or lift.
c. Make at least one (1) field density test for each column footing and one for each twenty-five lineal feet of wall or fraction thereof.

2. Testing Criteria – Provide field density tests in accordance with ASTM D1556, ASTM D2167, or ASTM D2922.

B. Visual Inspections – none required.

3.2 CAST-IN-PLACE CONCRETE

A. Materials Testing

1. Frequency

a. A “set” of test cylinders shall be defined as a minimum of four (4) cylinders.
b. One (1) set of test cylinders for each mix design, but not less than once per day.
c. One (1) set for each 250 cubic yards of mat foundations or fraction thereof.
d. One (1) set for each 50 cubic yards of piles or fraction thereof, but not less than one (1) set per each pile group.
e. One (1) set for each 50 cubic yards of footings, pile caps and grade beams or fraction thereof.
f. One (1) set for each 50 cubic yards of columns or shear walls or fraction thereof, but not less than two (2) sets per floor.
g. One (1) set for each 150 cubic yards of elevated floor or fraction thereof, but not less than one (1) set per each 5,000 square feet of floor area.
h. One (1) set for each 150 cubic yards of basement walls or fraction thereof.
i. For all other concrete not specified above, provide one (1) set for each 150 cubic yards or fraction thereof.
j. No more than one set of cylinders at a time shall be made from any single truck.
k. If the total volume of concrete is such that the frequency of testing as specified above would provide less than five strength tests for a given class of concrete, tests shall be made from at least five randomly selected batches or from each batch if fewer than five batches are used.
l. The above frequencies assume that one batch plant will be used for each pour. If more than one batch plant is used, the frequencies cited above shall apply for each plant used.
m. One (1) additional cylinder per set will be taken for formed concrete floor systems for the purpose of evaluating the concrete strength at the time of form stripping. The cylinder shall be broken at the time of form removal as directed by the Contractor.
n. One (1) additional cylinder per set will be taken for post-tensioned concrete floors or walls for the purpose of evaluating concrete strength at the time of

stressing. The cylinder shall be tested at the time of stressing as directed by the Contractor.

2. Testing Criteria

   a. Certify concrete meets the strength requirements of Specification Section 03300 with test cylinders taken in accordance with ASTM C172 and ASTM C31, and the above frequencies; and tested in accordance with ASTM C39. Break one test cylinder at seven days, two at 28 days, and one at 56 days.
   b. When drilled cores are required by the Engineer, provide test cores in accordance with ASTM C42.
   c. Provide slump tests in accordance with ASTM C143.
   d. Provide air entrainment tests in accordance with ASTM C233.
   e. Record the concrete temperature at the point of end of the truck chute.
   f. Obtain mill certificates from the concrete supplier certifying that the Portland cement has been tested and meets the requirements of ASTM C150.
   g. Obtain mill certificates from the concrete supplier certifying that the aggregates have been tested and meet the requirements of ASTM C33 or ASTM C330.

3. Handling of Test Cylinders

   a. The cylinders shall be numbered and dated, and the point of concrete placement in the building recorded.
   b. The Contractor shall be responsible for providing a protected concrete cylinder storage box at a place on the job site, mutually agreeable with the Testing Laboratory, for the purpose of storing concrete cylinders until they are transported to the Laboratory.
   c. The Owner's Testing Laboratory shall be responsible for transporting the cylinders to the Laboratory in a protected environment such that no damage or ill effect will occur to the concrete cylinders.

B. Visual Inspections (TI)

1. Verify the first concrete truck of each type of concrete has the proper concrete mix number, strength and that batch time has not exceeded the allowable temperature and time limits. Spot check future trucks.
2. Record all amounts of water that are field added to the concrete mixes. Verify that the addition of water in the field meets the guidelines in the Contract Documents and do not exceed the limits as specified by the concrete supplier.
3. Verify that the concrete is being conveyed from the mixer to the place of final deposit by recognized industry standards.
4. Verify that concrete is being placed continuously, or in a manner to avoid placing concrete against hardened concrete, resulting in the formation of a cold joint.
5. Verify that concrete is being consolidated properly by means of vibration per the contract documents.

C. Reporting Requirements – provide the following on each report submitted:

1. Truck number, ticket number and concrete batch plant

2. Mix design number, and an accurate location of where it is poured in the structure
3. Strength requirement
4. Date the cylinders are made and broken, and the name of the technician making cylinders
5. Concrete temperature at point of sampling
6. Air temperature at point of placement in the structure
7. Amount of water added to the truck at the batch plant and at the site, and whether it exceeds the amount allowed by the mix design
8. Slump, unit weight, and air content
9. Cylinder compressive strengths with type of failure if the concrete does not meet the Specification requirements. Seven day breaks are to be flagged if they are less than 60% of the required 28-day strength. 28-day breaks are to be flagged if either cylinder fails to meet Specification requirements.

3.3 CONCRETE REINFORCEMENT

A. Materials Testing – none required.

B. Visual Inspections (TI)

1. Visually verify the following of at least 10% of the total tonnage of reinforcement for the project:

   a. Bars are free from injurious defects and have a workman-like finish.
   b. Deformations in the bars are the proper size, shape, and spacing as detailed in ASTM A-615.
   c. Bars are free of excessive rust and/or pelting.
   d. The bars do not have any unusual twists or bends.

2. Visually verify at least 50% of the total contact lap splices that they comply with the requirements of the Contract Documents.
3. Visually verify 100% of the mechanical reinforcement splices that they comply with the requirements of the Contract Documents and the manufacturer's requirements.
4. Visually verify 100% of the compression reinforcement butt splices that they comply with the requirements of the Contract Documents and ACI 318.

3.4 LOADBEARING MASONRY

A. Materials Testing

1. Concrete Masonry Units (CMU)

   a. Frequency – three (3) units from every 9,000 units or fraction thereof.
   b. Testing Criteria – Certify units meet the strength requirements of ASTM C90 as tested in accordance with ASTM C140.

2. Mortar

a. Frequency – one (1) test for each 5,000 square feet of wall, but no less than one test for each day's operation of wall construction.
b. Testing Criteria – Certify mortar complies with the requirements of ASTM C270 for Type M or S mortar as tested in accordance with ASTM C780.

3. Grout

a. Frequency – four (4) tests for each 30 cubic yards of grout, but no less than one test for each day's operation of wall construction. An additional test shall be made whenever the grout mix is changed. Test one prism at 7 days, test two prisms at 28 days, and the fourth prism at 56 days.
b. Testing Criteria – Certify mortar complies with the requirements of ASTM C270 for Type M or S mortar as tested in accordance with ASTM C780.

B. Visual Inspections (TI)

1. Verify proper size and placement of all reinforcement including vertical reinforcement in walls, pilasters and columns; joint reinforcement; embedded items and inserts; anchors and other structural items.
2. Verify that control joints are placed where specified on the architectural and structural drawings.
3. Verify proper construction and placement of masonry lintels, bond beams, columns and tie beams.
4. During grouting, verify that all cells are filled solid and that grout is properly consolidated. For high-lift grouting, verify the proper placement of clean-out holes.

END OF SECTION 014100

SECTION 015000 - TEMPORARY FACILITIES AND CONTROLS

PART 1 - GENERAL

1.1 SUMMARY

A. Section includes requirements for temporary utilities, support facilities, and security and protection facilities.

B. Related Requirements:
   1. Section 011000 "Summary" for work restrictions and limitations on utility interruptions.

1.2 USE CHARGES

A. General: Installation and removal of and use charges for temporary facilities shall be included in the Contract Sum unless otherwise indicated. Allow other entities to use temporary services and facilities without cost, including, but not limited to, Owner's construction forces, Architect, testing agencies, and authorities having jurisdiction.

1.3 INFORMATIONAL SUBMITTALS

A. Site Plan: Show temporary facilities, utility hookups, staging areas, and parking areas for construction personnel.

B. Fire-Safety Program: Show compliance with requirements of NFPA 241 and authorities having jurisdiction. Indicate Contractor personnel responsible for management of fire prevention program.

1.4 QUALITY ASSURANCE

A. Electric Service: Comply with NECA, NEMA, and UL standards and regulations for temporary electric service. Install service to comply with NFPA 70.

B. Tests and Inspections: Arrange for authorities having jurisdiction to test and inspect each temporary utility before use. Obtain required certifications and permits.

1.5 PROJECT CONDITIONS

A. Temporary Use of Permanent Facilities: Engage Installer of each permanent service to assume responsibility for operation, maintenance, and protection of each permanent service during its use as a construction facility before Owner's acceptance, regardless of previously assigned responsibilities.

PART 2 - PRODUCTS

2.1 TEMPORARY FACILITIES

A. Field Offices, General: Prefabricated or mobile units with serviceable finishes, temperature controls, and foundations adequate for normal loading.

B. Common-Use Field Office: Of sufficient size to accommodate needs of Owner, Architect, and construction personnel office activities and to accommodate Project meetings specified in other Division 01 Sections. Keep office clean and orderly.

C. Storage and Fabrication Sheds: Provide sheds sized, furnished, and equipped to accommodate materials and equipment for construction operations.

2.2 EQUIPMENT

A. Fire Extinguishers: Portable, UL rated; with class and extinguishing agent as required by locations and classes of fire exposures.

B. HVAC Equipment: Unless Owner authorizes use of permanent HVAC system, provide vented, self-contained, liquid-propane-gas or fuel-oil heaters with individual space thermostatic control.
   1. Use of gasoline-burning space heaters, open-flame heaters, or salamander-type heating units is prohibited.
   2. Heating Units: Listed and labeled for type of fuel being consumed, by a qualified testing agency acceptable to authorities having jurisdiction, and marked for intended location and application.

PART 3 - EXECUTION

3.1 INSTALLATION, GENERAL

A. Locate facilities where they will serve Project adequately and result in minimum interference with performance of the Work. Relocate and modify facilities as required by progress of the Work.

B. Provide each facility ready for use when needed to avoid delay. Do not remove until facilities are no longer needed or are replaced by authorized use of completed permanent facilities.

3.2 TEMPORARY UTILITY INSTALLATION

A. General: Install temporary service or connect to existing service.
   1. Arrange with utility company, Owner, and existing users for time when service can be interrupted, if necessary, to make connections for temporary services.

B. Sewers and Drainage: Provide temporary utilities to remove effluent lawfully.
   1. Connect temporary sewers to municipal system as directed by authorities having jurisdiction.

C. Water Service: Install water service and distribution piping in sizes and pressures adequate for construction.

D. Sanitary Facilities: Provide temporary toilets, wash facilities, and drinking water for use of construction personnel. Comply with requirements of authorities having jurisdiction for type, number, location, operation, and maintenance of fixtures and facilities.

E. Heating and Cooling: Provide temporary heating and cooling required by construction activities for curing or drying of completed installations or for protecting installed construction from adverse effects of low temperatures or high humidity. Select equipment that will not have a harmful effect on completed installations or elements being installed.

F. Ventilation and Humidity Control: Provide temporary ventilation required by construction activities for curing or drying of completed installations or for protecting installed construction from adverse effects of high humidity. Select equipment that will not have a harmful effect on completed installations or elements being installed. Coordinate ventilation requirements to produce ambient condition required and minimize energy consumption.

G. Electric Power Service: Provide electric power service and distribution system of sufficient size, capacity, and power characteristics required for construction operations.
   1. Install electric power service overhead unless otherwise indicated.

H. Lighting: Provide temporary lighting with local switching that provides adequate illumination for construction operations, observations, inspections, and traffic conditions.
   1. Install and operate temporary lighting that fulfills security and protection requirements without operating entire system.

I. Telephone Service: Provide temporary telephone service in common-use facilities for use by all construction personnel. Install two telephone lines for each field office.
   1. Provide additional telephone lines for the following:
      a. Provide a dedicated telephone line for each facsimile machine in each field office.
   2. At each telephone, post a list of important telephone numbers.
      a. Police and fire departments.
      b. Ambulance service.
      c. Contractor's home office.
      d. Contractor's emergency after-hours telephone number.
      e. Architect's office.
      f. Engineers' offices.
      g. Owner's office.
      h. Principal subcontractors' field and home offices.
   3. Provide superintendent with cellular telephone or portable two-way radio for use when away from field office.

J. Electronic Communication Service: Provide a Wi-Fi connection in the primary field office adequate for use by Architect and Owner to access project electronic documents and maintain electronic communications.

3.3 SUPPORT FACILITIES INSTALLATION

A. General: Comply with the following:
   1. Provide construction for temporary offices, shops, and sheds located within construction area or within 30 feet of building lines that is noncombustible according to ASTM E 136. Comply with NFPA 241.
   2. Maintain support facilities until Architect schedules Substantial Completion inspection. Remove before Substantial Completion. Personnel remaining after Substantial Completion will be permitted to use permanent facilities, under conditions acceptable to Owner.

B. Traffic Controls: Comply with requirements of authorities having jurisdiction.
   1. Protect existing site improvements to remain including curbs, pavement, and utilities.
   2. Maintain access for fire-fighting equipment and access to fire hydrants.

C. Parking: Provide temporary parking areas for construction personnel.

D. Dewatering Facilities and Drains: Comply with requirements of authorities having jurisdiction. Maintain Project site, excavations, and construction free of water.
   1. Dispose of rainwater in a lawful manner that will not result in flooding Project or adjoining properties or endanger permanent Work or temporary facilities.
   2. Remove snow and ice as required to minimize accumulations.

E. Project Signs: Provide Project signs as indicated. Unauthorized signs are not permitted.
   1. Identification Signs: Provide Project identification signs as indicated on Drawings.
   2. Temporary Signs: Provide other signs as indicated and as required to inform public and individuals seeking entrance to Project.
   3. Maintain and touchup signs so they are legible at all times.

F. Waste Disposal Facilities: Provide waste-collection containers in sizes adequate to handle waste from construction operations. Comply with requirements of authorities having jurisdiction. Comply with progress cleaning requirements in Section 017300 "Execution."

3.4 SECURITY AND PROTECTION FACILITIES INSTALLATION

A. Protection of Existing Facilities: Protect existing vegetation, equipment, structures, utilities, and other improvements at Project site and on adjacent properties, except those indicated to be removed or altered. Repair damage to existing facilities.

B. Environmental Protection: Provide protection, operate temporary facilities, and conduct construction as required to comply with environmental regulations and that minimize possible air, waterway, and subsoil contamination or pollution or other undesirable effects.

C. Stormwater Control: Comply with requirements of authorities having jurisdiction. Provide barriers in and around excavations and subgrade construction to prevent flooding by runoff of stormwater from heavy rains.

D. Tree and Plant Protection: Install temporary fencing located as indicated or outside the drip line of trees to protect vegetation from damage from construction operations. Protect tree root systems from damage, flooding, and erosion.

E. Pest Control: Engage pest-control service to recommend practices to minimize attraction and harboring of rodents, roaches, and other pests and to perform extermination and control procedures at regular intervals so Project will be free of pests and their residues at Substantial Completion. Perform control operations lawfully, using environmentally safe materials.

F. Security Enclosure and Lockup: Install temporary enclosure around partially completed areas of construction. Provide lockable entrances to prevent unauthorized entrance, vandalism, theft, and similar violations of security. Lock entrances at end of each work day.

G. Barricades, Warning Signs, and Lights: Comply with requirements of authorities having jurisdiction for erecting structurally adequate barricades, including warning signs and lighting.

H. Temporary Egress: Maintain temporary egress from existing occupied facilities as indicated and as required by authorities having jurisdiction.

I. Temporary Enclosures: Provide temporary enclosures for protection of construction, in progress and completed, from exposure, foul weather, other construction operations, and similar activities. Provide temporary weathertight enclosure for building exterior.
   1. Where heating or cooling is needed and permanent enclosure is not complete, insulate temporary enclosures.

J. Temporary Fire Protection: Install and maintain temporary fire-protection facilities of types needed to protect against reasonably predictable and controllable fire losses. Comply with NFPA 241; manage fire prevention program.
   1. Prohibit smoking in construction areas.
   2. Supervise welding operations, combustion-type temporary heating units, and similar sources of fire ignition according to requirements of authorities having jurisdiction.
   3. Develop and supervise an overall fire-prevention and -protection program for personnel at Project site. Review needs with local fire department and establish procedures to be followed. Instruct personnel in methods and procedures. Post warnings and information.

4. Provide temporary standpipes and hoses for fire protection. Hang hoses with a warning sign stating that hoses are for fire-protection purposes only and are not to be removed. Match hose size with outlet size and equip with suitable nozzles.

3.5 MOISTURE AND MOLD CONTROL

A. Contractor's Moisture Protection Plan: Avoid trapping water in finished work. Document visible signs of mold that may appear during construction.

B. Exposed Construction Phase: Before installation of weather barriers, when materials are subject to wetting and exposure and to airborne mold spores, protect materials from water damage and keep porous and organic materials from coming into prolonged contact with concrete.

C. Partially Enclosed Construction Phase: After installation of weather barriers but before full enclosure and conditioning of building, when installed materials are still subject to infiltration of moisture and ambient mold spores, protect as follows:
   1. Do not load or install drywall or other porous materials or components, or items with high organic content, into partially enclosed building.
   2. Keep interior spaces reasonably clean and protected from water damage.
   3. Discard or replace water-damaged and wet material.
   4. Discard, replace, or clean stored or installed material that begins to grow mold.
   5. Perform work in a sequence that allows any wet materials adequate time to dry before enclosing the material in drywall or other interior finishes.

D. Controlled Construction Phase of Construction: After completing and sealing of the building enclosure but prior to the full operation of permanent HVAC systems, maintain as follows:
   1. Control moisture and humidity inside building by maintaining effective dry-in conditions.
   2. Remove materials that cannot be completely restored to their manufactured moisture level within 48 hours.

3.6 OPERATION, TERMINATION, AND REMOVAL

A. Supervision: Enforce strict discipline in use of temporary facilities. To minimize waste and abuse, limit availability of temporary facilities to essential and intended uses.

B. Maintenance: Maintain facilities in good operating condition until removal.
   1. Maintain operation of temporary enclosures, heating, cooling, humidity control, ventilation, and similar facilities on a 24-hour basis where required to achieve indicated results and to avoid possibility of damage.

C. Temporary Facility Changeover: Do not change over from using temporary security and protection facilities to permanent facilities until Substantial Completion.

D. Termination and Removal: Remove each temporary facility when need for its service has ended, when it has been replaced by authorized use of a permanent facility, or no

later than Substantial Completion. Complete or, if necessary, restore permanent construction that may have been delayed because of interference with temporary facility. Repair damaged Work, clean exposed surfaces, and replace construction that cannot be satisfactorily repaired.

1. Materials and facilities that constitute temporary facilities are property of Contractor. Owner reserves right to take possession of Project identification signs.
2. At Substantial Completion, repair, renovate, and clean permanent facilities used during construction period. Comply with final cleaning requirements specified in Section 017700 "Closeout Procedures."

END OF SECTION 015000

SECTION 016000 - PRODUCT REQUIREMENTS

PART 1 - GENERAL

1.1 SUMMARY

A. Section includes administrative and procedural requirements for selection of products for use in Project; product delivery, storage, and handling; manufacturers' standard warranties on products; special warranties; and comparable products.

B. Related Requirements:
   1. Section 012500 "Substitution Procedures" for requests for substitutions.

1.2 DEFINITIONS

A. Products: Items obtained for incorporating into the Work, whether purchased for Project or taken from previously purchased stock. The term "product" includes the terms "material," "equipment," "system," and terms of similar intent.
   1. Named Products: Items identified by manufacturer's product name, including make or model number or other designation shown or listed in manufacturer's published product literature, that is current as of date of the Contract Documents.
   2. New Products: Items that have not previously been incorporated into another project or facility. Products salvaged or recycled from other projects are not considered new products.
   3. Comparable Product: Product that is demonstrated and approved through submittal process to have the indicated qualities related to type, function, dimension, in-service performance, physical properties, appearance, and other characteristics that correspond or exceed those of specified product.

B. Basis-of-Design Product Specification: A specification in which a specific manufacturer's product is named and accompanied by the words "basis-of-design product," including make or model number or other designation, to establish the significant qualities related to type, function, dimension, in-service performance, physical properties, appearance, and other characteristics for purposes of evaluating comparable products of additional manufacturers named in the specification.

1.3 ACTION SUBMITTALS

A. Comparable Product Requests: Submit request for consideration of each comparable product. Identify product or fabrication or installation method to be replaced. Include Specification Section number and title and Drawing numbers and titles.

1. Architect's Action: If necessary, Architect will request additional information or documentation for evaluation within one week of receipt of a comparable product request. Architect will notify Contractor[through Construction Manager] of approval or rejection of proposed comparable product request within 15 days of receipt of request, or seven days of receipt of additional information or documentation, whichever is later.
   a. Form of Approval: As specified in Section 013300 "Submittal Procedures."
   b. Use product specified if Architect does not issue a decision on use of a comparable product request within time allocated.

B. Basis-of-Design Product Specification Submittal: Comply with requirements in Section 013300 "Submittal Procedures." Show compliance with requirements.

1.4 QUALITY ASSURANCE

A. Compatibility of Options: If Contractor is given option of selecting between two or more products for use on Project, select product compatible with products previously selected, even if previously selected products were also options.

1.5 PRODUCT DELIVERY, STORAGE, AND HANDLING

A. Deliver, store, and handle products using means and methods that will prevent damage, deterioration, and loss, including theft and vandalism. Comply with manufacturer's written instructions.

B. Delivery and Handling:
   1. Schedule delivery to minimize long-term storage at Project site and to prevent overcrowding of construction spaces.
   2. Coordinate delivery with installation time to ensure minimum holding time for items that are flammable, hazardous, easily damaged, or sensitive to deterioration, theft, and other losses.
   3. Deliver products to Project site in an undamaged condition in manufacturer's original sealed container or other packaging system, complete with labels and instructions for handling, storing, unpacking, protecting, and installing.
   4. Inspect products on delivery to determine compliance with the Contract Documents and to determine that products are undamaged and properly protected.

C. Storage:
   1. Store products to allow for inspection and measurement of quantity or counting of units.
   2. Store materials in a manner that will not endanger Project structure.
   3. Store products that are subject to damage by the elements, under cover in a weathertight enclosure above ground, with ventilation adequate to prevent condensation.
   4. Protect foam plastic from exposure to sunlight, except to extent necessary for period of installation and concealment.

5. Comply with product manufacturer's written instructions for temperature, humidity, ventilation, and weather-protection requirements for storage.
6. Protect stored products from damage and liquids from freezing.

1.6 PRODUCT WARRANTIES

A. Warranties specified in other Sections shall be in addition to, and run concurrent with, other warranties required by the Contract Documents. Manufacturer's disclaimers and limitations on product warranties do not relieve Contractor of obligations under requirements of the Contract Documents.
   1. Manufacturer's Warranty: Written warranty furnished by individual manufacturer for a particular product and specifically endorsed by manufacturer to Owner.
   2. Special Warranty: Written warranty required by the Contract Documents to provide specific rights for Owner.

B. Special Warranties: Prepare a written document that contains appropriate terms and identification, ready for execution.
   1. Manufacturer's Standard Form: Modified to include Project-specific information and properly executed.
   2. Specified Form: When specified forms are included with the Specifications, prepare a written document using indicated form properly executed.
   3. Refer to other Sections for specific content requirements and particular requirements for submitting special warranties.

C. Submittal Time: Comply with requirements in Section 017700 "Closeout Procedures."

PART 2 - PRODUCTS

2.1 PRODUCT SELECTION PROCEDURES

A. General Product Requirements: Provide products that comply with the Contract Documents, are undamaged and, unless otherwise indicated, are new at time of installation.
   1. Provide products complete with accessories, trim, finish, fasteners, and other items needed for a complete installation and indicated use and effect.
   2. Standard Products: If available, and unless custom products or nonstandard options are specified, provide standard products of types that have been produced and used successfully in similar situations on other projects.
   3. Owner reserves the right to limit selection to products with warranties not in conflict with requirements of the Contract Documents.
   4. Where products are accompanied by the term "as selected," Architect will make selection.
   5. Descriptive, performance, and reference standard requirements in the Specifications establish salient characteristics of products.

B. Product Selection Procedures:
   1. Product: Where Specifications name a single manufacturer and product, provide the named product that complies with requirements. Comparable products or substitutions for Contractor's convenience will not be considered.
   2. Manufacturer/Source: Where Specifications name a single manufacturer or source, provide a product by the named manufacturer or source that complies with requirements. Comparable products or substitutions for Contractor's convenience will not be considered.
   3. Products:
      a. Restricted List: Where Specifications include a list of names of both manufacturers and products, provide one of the products listed that complies with requirements. Comparable products or substitutions for Contractor's convenience will be considered unless otherwise indicated.
      b. Nonrestricted List: Where Specifications include a list of names of both available manufacturers and products, provide one of the products listed, or an unnamed product, that complies with requirements. Comply with requirements in "Comparable Products" Article for consideration of an unnamed product.
   4. Manufacturers:
      a. Restricted List: Where Specifications include a list of manufacturers' names, provide a product by one of the manufacturers listed that complies with requirements. Comparable products or substitutions for Contractor's convenience will be considered unless otherwise indicated.
      b. Nonrestricted List: Where Specifications include a list of available manufacturers, provide a product by one of the manufacturers listed, or a product by an unnamed manufacturer, that complies with requirements. Comply with requirements in "Comparable Products" Article for consideration of an unnamed manufacturer's product.
   5. Basis-of-Design Product: Where Specifications name a product, or refer to a product indicated on Drawings, and include a list of manufacturers, provide the specified or indicated product or a comparable product by one of the other named manufacturers. Drawings and Specifications indicate sizes, profiles, dimensions, and other characteristics that are based on the product named. Comply with requirements in "Comparable Products" Article for consideration of an unnamed product by one of the other named manufacturers.

C. Visual Matching Specification: Where Specifications require "match Architect's sample", provide a product that complies with requirements and matches Architect's sample. Architect's decision will be final on whether a proposed product matches.
   1. If no product available within specified category matches and complies with other specified requirements, comply with requirements in Section 012500 "Substitution Procedures" for proposal of product.

D. Visual Selection Specification: Where Specifications include the phrase "as selected by Architect from manufacturer's full range" or similar phrase, select a product that complies with requirements. Architect will select color, gloss, pattern, density, or texture from manufacturer's product line that includes both standard and premium items.

2.2 COMPARABLE PRODUCTS

A. Conditions for Consideration: Architect will consider Contractor's request for comparable product when the following conditions are satisfied. If the following conditions are not satisfied, Architect may return requests without action, except to record noncompliance with these requirements:
   1. Evidence that the proposed product does not require revisions to the Contract Documents, that it is consistent with the Contract Documents and will produce the indicated results, and that it is compatible with other portions of the Work.
   2. Detailed comparison of significant qualities of proposed product with those named in the Specifications. Significant qualities include attributes such as performance, weight, size, durability, visual effect, and specific features and requirements indicated.
   3. Evidence that proposed product provides specified warranty.
   4. List of similar installations for completed projects with project names and addresses and names and addresses of architects and owners, if requested.
   5. Samples, if requested.

PART 3 - EXECUTION (Not Used)

END OF SECTION 016000

SECTION 017300 - EXECUTION

PART 1 - GENERAL

1.1 SUMMARY

A. Section includes general administrative and procedural requirements governing execution of the Work including, but not limited to, the following:
   1. Construction layout.
   2. Field engineering and surveying.
   3. Installation of the Work.
   4. Cutting and patching.
   5. Coordination of Owner-installed products.
   6. Progress cleaning.
   7. Starting and adjusting.
   8. Protection of installed construction.
   9. Correction of the Work.

B. Related Requirements:
   1. Section 011000 "Summary" for limits on use of Project site.
   2. Section 017700 "Closeout Procedures" for submitting final property survey with Project Record Documents, recording of Owner-accepted deviations from indicated lines and levels, and final cleaning.

1.2 INFORMATIONAL SUBMITTALS

A. Certificates: Submit certificate signed by land surveyor certifying that location and elevation of improvements comply with requirements.

B. Landfill Receipts: Submit copy of receipts issued by a landfill facility, licensed to accept hazardous materials, for hazardous waste disposal.

C. Certified Surveys: Submit two copies signed by land surveyor.

D. Final Property Survey: Submit 10 copies showing the Work performed and record survey data.

1.3 QUALITY ASSURANCE

A. Land Surveyor Qualifications: A professional land surveyor who is legally qualified to practice in jurisdiction where Project is located and who is experienced in providing land-surveying services of the kind indicated.

B. Cutting and Patching: Comply with requirements for and limitations on cutting and patching of construction elements.

1. Structural Elements: When cutting and patching structural elements, notify Architect of locations and details of cutting and await directions from Architect before proceeding. Shore, brace, and support structural element during cutting and patching. Do not cut and patch structural elements in a manner that could change their load-carrying capacity or increase deflection
2. Operational Elements: Do not cut and patch operating elements and related components in a manner that results in reducing their capacity to perform as intended or that results in increased maintenance or decreased operational life or safety.
3. Other Construction Elements: Do not cut and patch other construction elements or components in a manner that could change their load-carrying capacity, that results in reducing their capacity to perform as intended, or that results in increased maintenance or decreased operational life or safety.
4. Visual Elements: Do not cut and patch construction in a manner that results in visual evidence of cutting and patching. Do not cut and patch exposed construction in a manner that would, in Architect's opinion, reduce the building's aesthetic qualities. Remove and replace construction that has been cut and patched in a visually unsatisfactory manner.

PART 2 - PRODUCTS

2.1 MATERIALS

A. General: Comply with requirements specified in other Sections.

B. In-Place Materials: Use materials for patching identical to in-place materials. For exposed surfaces, use materials that visually match in-place adjacent surfaces to the fullest extent possible.
   1. If identical materials are unavailable or cannot be used, use materials that, when installed, will provide a match acceptable to Architect for the visual and functional performance of in-place materials.

PART 3 - EXECUTION

3.1 EXAMINATION

A. Existing Conditions: The existence and location of underground and other utilities and construction indicated as existing are not guaranteed. Before beginning sitework, investigate and verify the existence and location of underground utilities and other construction affecting the Work.
   1. Before construction, verify the location and invert elevation at points of connection of sanitary sewer, storm sewer, and water-service piping; underground electrical services, and other utilities.
   2. Furnish location data for work related to Project that must be performed by public utilities serving Project site.

B. Examination and Acceptance of Conditions: Before proceeding with each component of the Work, examine substrates, areas, and conditions, with Installer or Applicator present where indicated, for compliance with requirements for installation tolerances and other conditions affecting performance. Record observations.
   1. Examine roughing-in for mechanical and electrical systems to verify actual locations of connections before equipment and fixture installation.
   2. Examine walls, floors, and roofs for suitable conditions where products and systems are to be installed.
   3. Verify compatibility with and suitability of substrates, including compatibility with existing finishes or primers.

C. Proceed with installation only after unsatisfactory conditions have been corrected. Proceeding with the Work indicates acceptance of surfaces and conditions.

3.2 PREPARATION

A. Existing Utility Information: Furnish information to local utility that is necessary to adjust, move, or relocate existing utility structures, utility poles, lines, services, or other utility appurtenances located in or affected by construction. Coordinate with authorities having jurisdiction.

B. Field Measurements: Take field measurements as required to fit the Work properly. Recheck measurements before installing each product. Where portions of the Work are indicated to fit to other construction, verify dimensions of other construction by field measurements before fabrication. Coordinate fabrication schedule with construction progress to avoid delaying the Work.

C. Space Requirements: Verify space requirements and dimensions of items shown diagrammatically on Drawings.

D. Review of Contract Documents and Field Conditions: Immediately on discovery of the need for clarification of the Contract Documents caused by differing field conditions outside the control of Contractor, submit a request for information to Architect according to requirements in Section 013100 "Project Management and Coordination."

3.3 CONSTRUCTION LAYOUT

A. Verification: Before proceeding to lay out the Work, verify layout information shown on Drawings, in relation to the property survey and existing benchmarks. If discrepancies are discovered, notify Architect promptly.

B. General: Engage a land surveyor to lay out the Work using accepted surveying practices.
   1. Establish benchmarks and control points to set lines and levels at each story of construction and elsewhere as needed to locate each element of Project.
   2. Establish limits on use of Project site.
   3. Establish dimensions within tolerances indicated. Do not scale Drawings to obtain required dimensions.

4. Inform installers of lines and levels to which they must comply.
5. Check the location, level and plumb, of every major element as the Work progresses.
6. Notify Architect when deviations from required lines and levels exceed allowable tolerances.
7. Close site surveys with an error of closure equal to or less than the standard established by authorities having jurisdiction.

C. Site Improvements: Locate and lay out site improvements, including pavements, grading, fill and topsoil placement, utility slopes, and rim and invert elevations.

D. Building Lines and Levels: Locate and lay out control lines and levels for structures, building foundations, column grids, and floor levels, including those required for mechanical and electrical work. Transfer survey markings and elevations for use with control lines and levels. Level foundations and piers from two or more locations.

E. Record Log: Maintain a log of layout control work. Record deviations from required lines and levels. Include beginning and ending dates and times of surveys, weather conditions, name and duty of each survey party member, and types of instruments and tapes used. Make the log available for reference by Architect.

3.4 FIELD ENGINEERING

A. Reference Points: Locate existing permanent benchmarks, control points, and similar reference points before beginning the Work. Preserve and protect permanent benchmarks and control points during construction operations.

B. Benchmarks: Establish and maintain a minimum of two permanent benchmarks on Project site, referenced to data established by survey control points. Comply with authorities having jurisdiction for type and size of benchmark.
1. Record benchmark locations, with horizontal and vertical data, on Project Record Documents.

C. Certified Survey: On completion of foundation walls, major site improvements, and other work requiring field-engineering services, prepare a certified survey showing dimensions, locations, angles, and elevations of construction and sitework.

D. Final Property Survey: Engage a land surveyor to prepare a final property survey showing significant features (real property) for Project. Include on the survey a certification, signed by land surveyor, that principal metes, bounds, lines, and levels of Project are accurately positioned as shown on the survey.
1. Recording: At Substantial Completion, have the final property survey recorded by or with authorities having jurisdiction as the official "property survey."

3.5 INSTALLATION

A. General: Locate the Work and components of the Work accurately, in correct alignment and elevation, as indicated.

1. Make vertical work plumb and make horizontal work level.
2. Where space is limited, install components to maximize space available for maintenance and ease of removal for replacement.
3. Conceal pipes, ducts, and wiring in finished areas unless otherwise indicated.

B. Comply with manufacturer's written instructions and recommendations for installing products in applications indicated.

C. Install products at the time and under conditions that will ensure the best possible results. Maintain conditions required for product performance until Substantial Completion.

D. Conduct construction operations so no part of the Work is subjected to damaging operations or loading in excess of that expected during normal conditions of occupancy.

E. Sequence the Work and allow adequate clearances to accommodate movement of construction items on site and placement in permanent locations.

F. Tools and Equipment: Do not use tools or equipment that produce harmful noise levels.

G. Templates: Obtain and distribute to the parties involved templates for work specified to be factory prepared and field installed. Check Shop Drawings of other work to confirm that adequate provisions are made for locating and installing products to comply with indicated requirements.

H. Attachment: Provide blocking and attachment plates and anchors and fasteners of adequate size and number to securely anchor each component in place, accurately located and aligned with other portions of the Work. Where size and type of attachments are not indicated, verify size and type required for load conditions.
1. Mounting Heights: Where mounting heights are not indicated, mount components at heights directed by Architect.
2. Allow for building movement, including thermal expansion and contraction.
3. Coordinate installation of anchorages. Furnish setting drawings, templates, and directions for installing anchorages, including sleeves, concrete inserts, anchor bolts, and items with integral anchors, that are to be embedded in concrete or masonry. Deliver such items to Project site in time for installation.

I. Joints: Make joints of uniform width. Where joint locations in exposed work are not indicated, arrange joints for the best visual effect. Fit exposed connections together to form hairline joints.

J. Hazardous Materials: Use products, cleaners, and installation materials that are not considered hazardous.

3.6 CUTTING AND PATCHING

A. Cutting and Patching, General: Employ skilled workers to perform cutting and patching. Proceed with cutting and patching at the earliest feasible time, and complete without delay.
   1. Cut in-place construction to provide for installation of other components or performance of other construction, and subsequently patch as required to restore surfaces to their original condition.

B. Temporary Support: Provide temporary support of work to be cut.

C. Protection: Protect in-place construction during cutting and patching to prevent damage. Provide protection from adverse weather conditions for portions of Project that might be exposed during cutting and patching operations.

D. Cutting: Cut in-place construction by sawing, drilling, breaking, chipping, grinding, and similar operations, including excavation, using methods least likely to damage elements retained or adjoining construction. If possible, review proposed procedures with original Installer; comply with original Installer's written recommendations.
   1. In general, use hand or small power tools designed for sawing and grinding, not hammering and chopping. Cut holes and slots neatly to minimum size required, and with minimum disturbance of adjacent surfaces. Temporarily cover openings when not in use.
   2. Finished Surfaces: Cut or drill from the exposed or finished side into concealed surfaces.
   3. Concrete and Masonry: Cut using a cutting machine, such as an abrasive saw or a diamond-core drill.
   4. Excavating and Backfilling: Comply with requirements in applicable Sections where required by cutting and patching operations.
   5. Mechanical and Electrical Services: Cut off pipe or conduit in walls or partitions to be removed. Cap, valve, or plug and seal remaining portion of pipe or conduit to prevent entrance of moisture or other foreign matter after cutting.
   6. Proceed with patching after construction operations requiring cutting are complete.

E. Patching: Patch construction by filling, repairing, refinishing, closing up, and similar operations following performance of other work. Patch with durable seams that are as invisible as practicable. Provide materials and comply with installation requirements specified in other Sections, where applicable.
   1. Inspection: Where feasible, test and inspect patched areas after completion to demonstrate physical integrity of installation.
   2. Exposed Finishes: Restore exposed finishes of patched areas and extend finish restoration into retained adjoining construction in a manner that will minimize evidence of patching and refinishing.
   3. Floors and Walls: Where walls or partitions that are removed extend one finished area into another, patch and repair floor and wall surfaces in the new space. Provide an even surface of uniform finish, color, texture, and appearance. Remove in-place floor and wall coverings and replace with new materials, if necessary, to achieve uniform color and appearance.

4. Ceilings: Patch, repair, or rehang in-place ceilings as necessary to provide an even-plane surface of uniform appearance.
5. Exterior Building Enclosure: Patch components in a manner that restores enclosure to a weathertight condition and ensures thermal and moisture integrity of building enclosure.

F. Cleaning: Clean areas and spaces where cutting and patching are performed. Remove paint, mortar, oils, putty, and similar materials from adjacent finished surfaces.

3.7 PROGRESS CLEANING

A. General: Clean Project site and work areas daily, including common areas. Enforce requirements strictly. Dispose of materials lawfully.
1. Comply with requirements in NFPA 241 for removal of combustible waste materials and debris.
2. Do not hold waste materials more than seven days during normal weather or three days if the temperature is expected to rise above 80 deg F.
3. Containerize hazardous and unsanitary waste materials separately from other waste. Mark containers appropriately and dispose of legally, according to regulations.

B. Site: Maintain Project site free of waste materials and debris.

C. Work Areas: Clean areas where work is in progress to the level of cleanliness necessary for proper execution of the Work.
1. Remove liquid spills promptly.
2. Where dust would impair proper execution of the Work, broom-clean or vacuum the entire work area, as appropriate.

D. Installed Work: Keep installed work clean. Clean installed surfaces according to written instructions of manufacturer or fabricator of product installed, using only cleaning materials specifically recommended. If specific cleaning materials are not recommended, use cleaning materials that are not hazardous to health or property and that will not damage exposed surfaces.

E. Concealed Spaces: Remove debris from concealed spaces before enclosing the space.

F. Exposed Surfaces in Finished Areas: Clean exposed surfaces and protect as necessary to ensure freedom from damage and deterioration at time of Substantial Completion.

G. Waste Disposal: Do not bury or burn waste materials on-site. Do not wash waste materials down sewers or into waterways.

H. During handling and installation, clean and protect construction in progress and adjoining materials already in place. Apply protective covering where required to ensure protection from damage or deterioration at Substantial Completion.

I. Clean and provide maintenance on completed construction as frequently as necessary through the remainder of the construction period. Adjust and lubricate operable components to ensure operability without damaging effects.

J. Limiting Exposures: Supervise construction operations to assure that no part of the construction, completed or in progress, is subject to harmful, dangerous, damaging, or otherwise deleterious exposure during the construction period.

3.8 STARTING AND ADJUSTING

A. Start equipment and operating components to confirm proper operation. Remove malfunctioning units, replace with new units, and retest.

B. Adjust equipment for proper operation. Adjust operating components for proper operation without binding.

C. Test each piece of equipment to verify proper operation. Test and adjust controls and safeties. Replace damaged and malfunctioning controls and equipment.

D. Manufacturer's Field Service: Comply with qualification requirements in Section 014000 "Quality Requirements"

3.9 PROTECTION OF INSTALLED CONSTRUCTION

A. Provide final protection and maintain conditions that ensure installed Work is without damage or deterioration at time of Substantial Completion.

B. Comply with manufacturer's written instructions for temperature and relative humidity.

END OF SECTION 017300

SECTION 017700 - CLOSEOUT PROCEDURES

PART 1 - GENERAL

1.1 SUMMARY

A. Section includes administrative and procedural requirements for contract closeout, including, but not limited to, the following:
   1. Substantial Completion procedures.
   2. Final completion procedures.
   3. Warranties.
   4. Final cleaning.
   5. Repair of the Work.

1.2 ACTION SUBMITTALS

A. Product Data: For cleaning agents.

B. Contractor's List of Incomplete Items: Initial submittal at Substantial Completion.

C. Certified List of Incomplete Items: Final submittal at Final Completion.

1.3 CLOSEOUT SUBMITTALS

A. Certificates of Release: From authorities having jurisdiction.

B. Certificate of Insurance: For continuing coverage.

C. Field Report: For pest control inspection.

1.4 MAINTENANCE MATERIAL SUBMITTALS

A. Schedule of Maintenance Material Items: For maintenance material submittal items specified in other Sections.

1.5 SUBSTANTIAL COMPLETION PROCEDURES

A. Contractor's List of Incomplete Items: Prepare and submit a list of items to be completed and corrected (Contractor's punch list), indicating the value of each item on the list and reasons why the Work is incomplete.

B. Submittals Prior to Substantial Completion: Complete the following a minimum of 10 days prior to requesting inspection for determining date of Substantial Completion. List items below that are incomplete at time of request.

1. Certificates of Release: Obtain and submit releases from authorities having jurisdiction permitting Owner unrestricted use of the Work and access to services and utilities. Include occupancy permits, operating certificates, and similar releases.
2. Submit closeout submittals specified in other Division 01 Sections, including project record documents, operation and maintenance manuals, final completion construction photographic documentation, damage or settlement surveys, property surveys, and similar final record information.
3. Submit closeout submittals specified in individual Sections, including specific warranties, workmanship bonds, maintenance service agreements, final certifications, and similar documents.
4. Submit maintenance material submittals specified in individual Sections, including tools, spare parts, extra materials, and similar items, and deliver to location designated by Architect. Label with manufacturer's name and model number where applicable.
   a. Schedule of Maintenance Material Items: Prepare and submit schedule of maintenance material submittal items, including name and quantity of each item and name and number of related Specification Section. Obtain Architect's signature for receipt of submittals.
5. Submit test/adjust/balance records.
6. Submit changeover information related to Owner's occupancy, use, operation, and maintenance.

C. Procedures Prior to Substantial Completion: Complete the following a minimum of 10 days prior to requesting inspection for determining date of Substantial Completion. List items below that are incomplete at time of request.
1. Advise Owner of pending insurance changeover requirements.
2. Make final changeover of permanent locks and deliver keys to Owner. Advise Owner's personnel of changeover in security provisions.
3. Complete startup and testing of systems and equipment.
4. Perform preventive maintenance on equipment used prior to Substantial Completion.
5. Instruct Owner's personnel in operation, adjustment, and maintenance of products, equipment, and systems.
6. Advise Owner of changeover in heat and other utilities.
7. Participate with Owner in conducting inspection and walkthrough with local emergency responders.
8. Terminate and remove temporary facilities from Project site, along with mockups, construction tools, and similar elements.
9. Complete final cleaning requirements, including touchup painting.
10. Touch up and otherwise repair and restore marred exposed finishes to eliminate visual defects.

D. Inspection: Submit a written request for inspection to determine Substantial Completion a minimum of 10 days prior to date the work will be completed and ready for final inspection and tests. On receipt of request, Architect will either proceed with inspection or notify Contractor of unfulfilled requirements. Architect will prepare the Certificate of Substantial Completion after inspection or will notify Contractor of items, either on Contractor's list or additional items identified by Architect, that must be completed or corrected before certificate will be issued.

1. Reinspection: Request reinspection when the Work identified in previous inspections as incomplete is completed or corrected.
2. Results of completed inspection will form the basis of requirements for final completion.

1.6 FINAL COMPLETION PROCEDURES

A. Preliminary Procedures: Before requesting final inspection for determining final completion, complete the following:
   1. Certified List of Incomplete Items: Submit certified copy of Architect's Substantial Completion inspection list of items to be completed or corrected (punch list), endorsed and dated by Architect. Certified copy of the list shall state that each item has been completed or otherwise resolved for acceptance.
   2. Certificate of Insurance: Submit evidence of final, continuing insurance coverage complying with insurance requirements.
   3. Submit pest-control final inspection report and warranty.
   4. Instruct Owner's personnel in operation, adjustment, and maintenance of products, equipment, and systems.

B. Inspection: Submit a written request for final inspection to determine acceptance. On receipt of request, Architect will either proceed with inspection or notify Contractor of unfulfilled requirements. Architect will prepare a final Certificate for Payment after inspection or will notify Contractor of construction that must be completed or corrected before certificate will be issued.
   1. Reinspection: Request reinspection when the Work identified in previous inspections as incomplete is completed or corrected.

1.7 LIST OF INCOMPLETE ITEMS (PUNCH LIST)

A. Organization of List: Include name and identification of each space and area affected by construction operations for incomplete items and items needing correction including, if necessary, areas disturbed by Contractor that are outside the limits of construction.
   1. Organize list of spaces in sequential order, starting with exterior areas first.
   2. Organize items applying to each space by major element, including categories for ceiling, individual walls, floors, equipment, and building systems.
   3. Submit list of incomplete items in the following format:
      a. PDF electronic file. Architect will return annotated copy.

1.8 SUBMITTAL OF PROJECT WARRANTIES

A. Time of Submittal: Submit written warranties on request of Architect for designated portions of the Work where commencement of warranties other than date of Substantial Completion is indicated, or when delay in submittal of warranties might limit Owner's rights under warranty.

B. Organize warranty documents into an orderly sequence based on the table of contents of the Project Manual.

1. Warranty Electronic File: Scan warranties and bonds and assemble complete warranty and bond submittal package into a single indexed electronic PDF file with links enabling navigation to each item. Provide bookmarked table of contents at beginning of document.

C. Provide additional copies of each warranty to include in operation and maintenance manuals.

PART 2 - PRODUCTS

2.1 MATERIALS

A. Cleaning Agents: Use cleaning materials and agents recommended by manufacturer or fabricator of the surface to be cleaned. Do not use cleaning agents that are potentially hazardous to health or property or that might damage finished surfaces.

PART 3 - EXECUTION

3.1 FINAL CLEANING

A. General: Perform final cleaning. Conduct cleaning and waste-removal operations to comply with local laws and ordinances and Federal and local environmental and antipollution regulations.

B. Cleaning: Employ experienced workers or professional cleaners for final cleaning. Clean each surface or unit to condition expected in an average commercial building cleaning and maintenance program. Comply with manufacturer's written instructions.

1. Complete the following cleaning operations before requesting inspection for certification of Substantial Completion for entire Project or for a designated portion of Project:
   a. Clean Project site, yard, and grounds, in areas disturbed by construction activities, including landscape development areas, of rubbish, waste material, litter, and other foreign substances.
   b. Sweep paved areas broom clean. Remove petrochemical spills, stains, and other foreign deposits.
   c. Rake grounds that are neither planted nor paved to a smooth, even-textured surface.
   d. Remove tools, construction equipment, machinery, and surplus material from Project site.
   e. Clean exposed exterior and interior hard-surfaced finishes to a dirt-free condition, free of stains, films, and similar foreign substances. Avoid disturbing natural weathering of exterior surfaces. Restore reflective surfaces to their original condition.
   f. Remove debris and surface dust from limited access spaces, including roofs, plenums, shafts, and similar spaces.
   g. Sweep concrete floors broom clean in unoccupied spaces.

h. Vacuum soft surfaces, removing debris and excess nap; clean according to manufacturer's recommendations if visible soil or stains remain.
i. Clean transparent materials, including mirrors and glass in doors and windows. Remove glazing compounds and other noticeable, vision-obscuring materials. Replace chipped or broken glass and other damaged transparent materials. Polish mirrors and glass, taking care not to scratch surfaces.
j. Remove labels that are not permanent.
k. Wipe surfaces of mechanical and electrical equipment and similar equipment. Remove excess lubrication, paint and mortar droppings, and other foreign substances.
l. Clean plumbing fixtures to a sanitary condition, free of stains, including stains resulting from water exposure.
m. Replace disposable air filters and clean permanent air filters. Clean exposed surfaces of diffusers, registers, and grills.
n. Clean light fixtures, lamps, globes, and reflectors to function with full efficiency.
o. Leave Project clean and ready for occupancy.

C. Pest Control: Comply with pest control requirements in Section 015000 "Temporary Facilities and Controls." Prepare written report.

3.2 REPAIR OF THE WORK

A. Complete repair and restoration operations before requesting inspection for determination of Substantial Completion.

B. Repair or remove and replace defective construction. Repairing includes replacing defective parts, refinishing damaged surfaces, touching up with matching materials, and properly adjusting operating equipment. Where damaged or worn items cannot be repaired or restored, provide replacements. Remove and replace operating components that cannot be repaired. Restore damaged construction and permanent facilities used during construction to specified condition.
1. Remove and replace chipped, scratched, and broken glass, reflective surfaces, and other damaged transparent materials.
2. Touch up and otherwise repair and restore marred or exposed finishes and surfaces. Replace finishes and surfaces that that already show evidence of repair or restoration.
   a. Do not paint over "UL" and other required labels and identification, including mechanical and electrical nameplates. Remove paint applied to required labels and identification.
3. Replace parts subject to operating conditions during construction that may impede operation or reduce longevity.
4. Replace burned-out bulbs, bulbs noticeably dimmed by hours of use, and defective and noisy starters in fluorescent and mercury vapor fixtures to comply with requirements for new fixtures.

END OF SECTION 017700

SECTION 032000 – CONCRETE REINFORCEMENT

PART 1 - GENERAL

1.1 DESCRIPTION OF WORK

A. This Reference Specification covers materials, fabrication, placement, and tolerances of reinforcement and reinforcement accessories Provisions of this Specification shall govern except where other provisions are specified in the Contract Documents.

B. Extent of reinforcement work is shown in the Contract Documents. Furnish all labor, materials, services, equipment and hardware required in conjunction with or related to the detailing, fabricating, delivery and placing of the reinforcement work.

C. Concrete paving, curbing and sidewalks are specified in Division 2. Concrete Formwork, Concrete, Architectural Concrete, Precast Concrete, Post-Tensioned Concrete and special requirements for Tilt-up Concrete Construction are specified in other Division 3 sections. Slab reinforcement for composite metal deck slabs is included in Section 05314.

1.2 DEFINITIONS

A. Contract Documents - The Structural AND Architectural drawings, and the drawings of the other design disciplines. The Contract Documents shall include all schedules, notes and details. Contract Documents may be amended during the course of construction via Bulletins, Requests for Information (RFI), supplemental sketches, etc. issued by the design team.

B. Exposed Condition – any area of the structure that is permanently exposed to the outside air including, but not limited to, parking garages, balconies, exterior corridors, architecturally exposed concrete, etc. Note that exposed conditions may also be categorized as severe or moderate exposures.

C. Severe Exposure – any area of the structure that is within 1,000 feet of the high water mark of adjacent sea water; or, is exposed to deicing or other aggressive chemicals, or where the concrete may become highly saturated by continual contact with moisture or free water prior to freezing.

D. Moderate Exposure – any area of concrete where freezing is expected but where the concrete is not exposed to deicing or other aggressive chemicals.

E. Mild Exposure – all exposures other than severe and moderate exposures.

F. Refer to the “Specifications for Structural Concrete (ACI 301)” published by the American Concrete Institute for all other definitions included in this Specification. The definitions provided throughout the ACI standard are included herein by reference.

1.3 REFERENCE STANDARDS

A. The following ACI Standards are referred to in this specification:

B. ACI 117-90 Specifications for Tolerances for Concrete Construction and Materials

C. ACI 302.1R Guide for Concrete Floor and Slab Construction

D. ASTM Standards - Refer to Section 1.3.1.2 of the "Specifications for Structural Concrete (ACI 301)" published by the American Concrete Institute for the ASTM Standards which are included herein by reference.

E. Refer to the "Specifications for Structural Concrete (ACI 301)" published by the American Concrete Institute for other referenced standards included in this Specification.

F. The following standards-producing organizations are referenced in this Specification:

1. American Concrete Institute (ACI)
2. Concrete Reinforcing Steel Institute (CRSI)

1.4 SUBMITTALS

A. Submittals required in this Reference Specification shall be submitted for review and acceptance. Submit the following data and drawings for review and acceptance prior to any fabrication, execution or erection:

1. Submit the following mandatory data:

a. Submit placing drawings showing size, quantity, length, and grade of reinforcing bars; fabrication dimensions; lap splice lengths and locations for placement of reinforcement and reinforcement supports.
b. Submit details for steel templates that are to be used for placing dowels for columns, plinths, pilasters, etc. that are to extend out of foundation elements.
c. Submit request for the use of mechanical splices not shown on the project drawings.
d. Steel Tonnage

2. Submit the following data when requested by the Engineer:

a. If coated reinforcement is required, submit description of reinforcement supports not described in elsewhere in this Specification, and materials for fastening coated reinforcement.
b. Mill Certificates - Submit mill certificates for all reinforcement signed by Contractor and producer for record.
c. International Conference of Building Official (ICBO) Technical Reports: Submit technical reports of approval from ICBO for mechanical splice and dowel bar substitute systems.
d. Unit cost data

B. Submit the following number of copies for each submittal:

1. Hard Copies

   a. Items submitted for review and approval – a minimum of two (2) copies up to a maximum of five (5) copies, with one (1) copy being retained by the Engineer. Review comments (a/k/a "redlines") provided by the Engineer shall be transferred to a total of five (5) submittal sets. The Contractor is responsible for transferring redlines on to any sets in excess of the five (5) sets specified.
   b. Items submitted for record purposes only – One (1) copy to be retained by the Engineer. Additional copies to be provided directly to others as directed.

2. Electronic copies of submittals may be submitted in lieu of hard copies when mutually authorized in advance by the Engineer, Architect and Contractor.

C. Submittals shall be provided in accordance with the following schedule:

1. The Contractor shall incorporate into his schedule and allow for a minimum of ten (10) working days per each item submitted for the Engineer's review of the submittal.
2. It is the Contractor's responsibility for assuring that submittals are provided in a timely manner such that the overall project schedule is not adversely impacted.
3. Multiple items submitted at one time shall be considered as individual submittals, and the 10-day review period shall be cumulative per individual submittal.
4. Any submittals received after 2:00 pm shall be considered to have been received the next business day. Electronic submittals shall be deemed as received when opened by the reviewer, and not when sent by the submitter or received by the reviewer's server.

D. Submittals shall be reviewed in the following manner:

1. Shop Drawings represent the submitter's interpretation of the Contract Documents. Shop Drawings are not in of themselves Contract Documents. In no way shall changes initiated by the submitter and included in these Shop Drawings supersede or revise the Contract Documents. Checking of the Shop Drawings is only for the general conformance with the design concept and general compliance with the Contract Documents. The Contractor is solely responsible for reviewing and verifying the Shop Drawings for information that pertains to means and methods, dimensions, fabrication processes, and the coordination of the Work between the various construction trades. Checking of the Shop Drawings by Engineer shall in no way relieve the Contractor of his responsibility for deviations from the Contract Documents, for any errors or omissions in the Shop Drawings, or for performing his own review of the Shop Drawings.
2. The Contractor shall review and approve all submittals prior to submitting them to the Architect/Engineer. Failure to review each submittal shall in no way relieve the Contractor of his own responsibility to correct items that do not comply with the Contract Documents.

3. Review comments (a/k/a “redlines”) provided by the Architect/Engineer shall apply to all subsequent pages and all subsequent sets of the submittal regardless of whether each page is redlined or not. Redlines shall be considered cumulative from submittal to submittal. The Architect/Engineer is not required to annotate or stamp every sheet.
4. Review comments for electronic submittals shall be provided in an electronic format only. It is the Contractor’s responsibility to ensure that electronic redlines are properly distributed to the subcontractor(s) and that said comments remain affixed to the electronic submittal (warning: electronic comments may not print on hard copies depending upon the software used by the person printing the reviewed submittal).
5. Revisions to shop drawings and calculations will be required in response to redlines provided by the Architect/Engineer. Such revisions are a natural part of the submittal review process and are to be expected. All costs associated with revising and re-submitting any shop drawing and/or calculations shall be borne solely by the Contractor and his subcontractors. Revising the field-use drawings to accommodate any redlines shall be the responsibility of the Contractor.
6. Structural members for which shop drawings have not been reviewed and approved shall not be fabricated, erected, or installed (no exceptions).

1.5 REQUESTS FOR INFORMATION (RFI)

A. The contractor and his sub-contractors may submit a Request for Information (“RFI”) on an as-needed basis. The purpose of the RFI is to obtain clarifications, request additional information, seek approval for a proposed alternate solution, etc. from the Design Team such that the construction of the Work may proceed in an efficient manner.

B. Each RFI shall contain the following minimum information:

1. A specific question for which an answer is requested.
2. The name of the company and person submitting the RFI
3. Additional cost associated with the RFI, if any
4. Explanatory sketches if required (highly recommended)
5. A proposed solution, if any

C. RFI’s shall be submitted and processed in the following manner:

1. All RFI’s shall be submitted directly to the Architect, who in turn will forward it to the Engineer. A copy may be sent directly to the Engineer, at the Contractor’s option and if approved by the Architect, but the official copy (the copy that is tracked) shall be the one submitted to the Architect.
2. RFI’s shall be submitted in writing only; verbal RFI’s will not be accepted nor answered. RFI’s submitted electronically shall be deemed as received when opened by the reviewer, and not when sent by the submitter or received by the reviewer’s server.
3. The Engineer’s response shall be submitted directly to the Architect who in turn will forward it to the Contractor. The Engineer may also send a courtesy copy directly to the Contractor.

4. RFI's that modify or amend the Contract Documents and/or will potentially result in a cost increase to the Project shall be approved in writing by both the Architect and Engineer before the Contractor proceeds with any work.
5. Any additional cost associated with the RFI shall be clearly identified (dollar values for material cost and number of days for schedule impact) at the time the RFI is submitted.

D. RFI's shall be submitted in accordance with the following schedule:

1. The Contractor shall incorporate into his schedule and allow for three (3) working days per each RFI for the Engineer to review and respond to the RFI.
2. It is the Contractor's responsibility for assuring that RFI's are provided in a timely manner such that the overall project Schedule is not adversely impacted.
3. A large number of multiple RFI's submitted at one time shall be considered as individual submittals, and the 3-day review period shall be cumulative per individual submittal.
4. Any RFI received after 2:00 pm shall be considered to have been received the next business day.

E. Any verbal discussions between the Design Team and the Contractor that modify or amend the Contract Documents and/or will potentially result in a cost increase to the Project shall be documented via a written RFI. It is the responsibility of the Contractor, not the Engineer, to submit a written confirming RFI. The Contractor proceeds at his own risk and expense if he performs work that was not documented by a confirming RFI.

1.6 SUBSTITUTIONS AND CHANGES

A. No substitutions, revisions, or any other modifications to the Contract Documents, proposed by the Contractor, shall be made unless the following conditions are met:

1. All substitutions, revisions, or any other modifications are clearly identified as such on the shop drawings via a "cloud" or "box." Each area so identified must be specifically approved by the Architect/Engineer in writing.
2. There is a substantial cost or schedule advantage to the Owner; or that the proposed revision is necessary to obtain the required materials or methods at the proper times to accomplish the work. In no case shall any revision proposed by the Contractor result in additional cost to the Owner.

B. Cost of Changes

1. The Contractor shall notify the Architect/Engineer in writing if a substitution or change will result in a cost increase to the project within five (5) working days of the date the change is proposed or initiated, regardless of who proposed or initiated the change. The Contractor shall submit to the Architect/Engineer in writing the cost of the substitution or change no later than fifteen (15) working days after the change is proposed or initiated.

2. The Contractor shall not be compensated for any change orders for a substitution or change, regardless of who proposed or initiated the change, where the Architect/Engineer are not notified of the cost of the change in accordance with the above.
3. The Architect/Engineer reserves the right to modify or cancel the substitution or change after their review of the cost information provided by the Contractor.

C. Value Engineering

1. Substitutions, revisions, or any other modifications to the Contract Documents for the purposes of reducing the cost of construction shall be made when requested by The Owner.
2. All such revisions shall include the cost of any re-design that is required of the Architect/Engineer.

1.7 QUALITY ASSURANCE

A. The Contractor, his sub-contractors and materials suppliers warrant that no asbestos related products are used on this project.

B. The Contractor is solely responsible for the quality control and quality assurance of the Work, including placement, workmanship and materials furnished by his subcontractors and suppliers.

C. The Materials Supplier(s) and Contractor are solely responsible for insuring that the constituent materials provided to the project comply with the requirements of this Specification.

D. The Contract Documents are complementary and shall be used in conjunction with each other. Items required by one design discipline shall be as binding as if required by all. Therefore, the contractor must provide copies of the structural <u>and</u> architectural drawings, and those of any other applicable design discipline, to each of the structural subcontractors prior to Bid. All bids must be based on a review of all of these drawings and <u>not</u> just the structural drawings.

E. The Contractor shall include in his services to the Owner a careful and detailed review of the Contract Documents. The purpose of the review is to identify any “scope gaps” that may exist between the various portions of the Contract Documents. The Contractor shall compare the Contract Documents and shall immediately bring to the engineer’s attention, in writing, any error, omission, or inconsistency that he may discover. All conflicts shall be brought to the architect’s attention prior to the commencement of any work.

F. In the event of any conflict among documents, including architectural and structural drawings and specifications, notify the Architect/Engineer prior to submitting proposal. In case of conflict between and/or among the structural drawings and specifications, the strictest interpretation shall govern, unless specified otherwise in writing by the Architect/Engineer.

G. Materials and operations may be tested and inspected by the Owner as work progresses. Failure to detect defective work or material early will not prevent rejection if a defect is discovered later nor shall it obligate the Architect/Engineer for final acceptance. Inspection or testing by others shall in no way relieve the Contractor of his responsibility to perform the Work in accordance with the Contract Documents.

1.8 QUALIFICATIONS

A. The reinforcement supplier shall have a minimum of five (5) years experience in the fabrication of steel reinforcement used in concrete construction.

B. The contractor and reinforcement placing subcontractor shall have a minimum of five (5) years experience with buildings of at least this size, and the installation of concrete similar in material, design and extent to that indicated for this Project and whose work has resulted in construction with a record of successful service performance.

1.9 MATERIALS DELIVERY, STORAGE, AND HANDLING

A. Prevent bending, coating with earth, oil, or other material, or otherwise damaging the reinforcement.

B. For handling coated reinforcement, use equipment having contact areas padded to avoid damaging the coating. Lift bundles of coated reinforcement at multiple pick-up points to prevent bar-to-bar abrasion from sags in the bundles. Do not drop or drag coated reinforcement. Store coated reinforcement on cribbing that will not damage the coating.

1.10 STOCKPILE REINFORCEMENT

A. The purpose of “stockpile” reinforcement is to cover shortfalls and unforeseen circumstances encountered during the construction process. This reinforcement shall be used as directed by the Engineer as circumstances dictate.

B. The quantity of stockpile reinforcement shall be equal to 5% (0.05) of the total scheduled reinforcement tonnage, as indicated in the Drawings and Schedules. Twenty-five percent (25%) of this reinforcement shall be stored on the jobsite under a protective cover. The remainder shall be stored at the reinforcement fabricator’s plant in an un-fabricated condition.

C. The cost of the stockpile reinforcement shall be included in the cost of the Project. Any unused stockpile reinforcement shall be credited back to the Owner. For purposes of bid, assume that one third of the stockpile reinforcement will be fabricated with hooked ends.

PART 2 - PRODUCTS

2.1 REINFORCEMENT MATERIALS

A. Conventional Reinforcing Steel

1. Use only deformed bars as reinforcement, except spirals and welded wire fabric, which may be plain. The sizes and types of the reinforcement are specified in the Contract Documents.
2. Unless noted otherwise in the Contract Documents, all reinforcement shall be Grade 60 and shall conform to ASTM A615.
3. Grade 75 reinforcement, if required by the Contract Documents, shall conform to ASTM A615 (Grade 75) and be at least ¾" in diameter.
4. All reinforcing steel required to be welded shall conform to ASTM A706.

B. Wire Reinforcement - Use plain (ASTM A82) or deformed wire (ASTM A496) as indicated in the Contract Documents. Plain wire may be used for spirals.

C. Welded Wire Reinforcement - Use welded plain wire (ASTM A185, 65 ksi) or deformed wire (ASTM A497, 70 ksi) fabric, in flat sheets only, as specified in the Contract Documents.

D. Reinforcement Supports - Provide supports for reinforcement including bolsters, chairs, spacers and other devices for spacing, supporting and fastening reinforcing bars and welded wire fabric in place. For slabs-on-grade, use supports with sand plates or horizontal runners designed for use on ground.

E. Deformed Bar Anchors shall conform to ASTM A496 (75 ksi). Standard Grade 60 or Grade 40 reinforcing bars may not be substituted for deformed bar anchors.

F. Tie Wire shall be annealed steel tie wire with a minimum 16 gauge. Provide only plastic coated or stainless steel tie wire in exposed concrete structures and all architectural concrete.

PART 3 - EXECUTION

3.1 FABRICATION

A. Bend reinforcement cold—do not heat reinforcement for bending. Fabricate reinforcement in accordance with fabricating tolerances of ACI 117. Bars with kinks or bends that are not scheduled will be rejected.

B. Bend diameters - Minimum inside bend diameters shall conform to the requirements of ACI 318.

C. Welding - Welding reinforcing steel is not permitted unless specifically shown on the structural drawings

3.2 DEVELOPMENT LENGTHS

A. The minimum development length (Ld), in inches, for different bar sizes used in this project shall be defined as follows:

1. #6 bars and smaller: Ld = 38 x bar diameter
2. #7 bars andlarger: Ld = 48 x bar diameter
3. For top reinforcement in foundations and beams (greater than 12” deep), multiply the above by 1.3
4. For epoxy-coated reinforcement, multiply the above by 1.2
5. For light-weight concrete, multiply the above by 1.33

3.3 PREPARATION

A. Reinforcement shall be free of materials deleterious to bond at the time the concrete is placed. Clean reinforcement of loose rust and mill scale, mud or dirt, grease, ice and other materials which reduce or destroy bond with concrete. All form oils must be placed before any reinforcement is placed.

B. Bundle reinforcement and tag with suitable identification to facilitate sorting and placing. Transport and store at site so as not to damage material. Keep sufficient supply of tested, approved and proper reinforcement at the site to avoid delays.

3.4 PLACEMENT

A. Accurately position, support and secure reinforcement against displacement by formwork, construction, or concrete placement operations. Locate and support reinforcing by metal chairs, runners, bolsters, spacers and hangers, as required. Exercise particular care to maintain proper distance and clearance between parallel bars, and between bars and forms, as specified in Section 3.03. Provide metal spreaders, spacers, and support bars to hold steel in position and at proper height upon approved chairs.

B. Tolerances - Place, support, and fasten reinforcement as shown on the project drawings. Do not exceed the placing tolerances specified in ACI 117 before concrete is placed. Placing tolerances shall not reduce cover requirements.

C. Concrete cover – Proper concrete cover is critical to preventing corrosion of the steel reinforcement. “Concrete cover” is defined as the distance as measured from the concrete surface to the edge of the nearest embedded steel reinforcement. Minimum concrete cover for reinforcement shall be as follows (note that greater covers may be specified in the Contract Documents due to required fire ratings):

1. All surfaces cast against earth = 3”
2. Foundations = 2”
3. Surfaces in exposed conditions = 2”
4. Beams and columns = 1½”
5. Elevated slabs, bottom = ¾”; top = 1”
6. Slabs-on-grade = 1”

D. Reinforcement spacing

1. The minimum clear spacing between parallel bars shall be one bar diameter, 1.5 times the maximum aggregate size, or 1”, whichever is greater.
2. The minimum clear spacing between bars placed in vertically aligned layers shall be 1.5 times the maximum aggregate size or 1”, whichever is greater.
3. In columns and walls, the minimum clear spacing between vertical bars shall be 1.5 bar diameters, 1.5 times the maximum aggregate size, or 1.50”, whichever is greater.
4. These clear distance limitations between bars shall also apply to the clear distance between contact lap splices and adjacent splices or bars.

E. Reinforcement supports

1. Bottom reinforcement - Place reinforcement supported from the ground or mud mat on precast concrete reinforcement supports or slab bolsters designed for soil supported slabs. Spacing between these supports shall not exceed 4’-0” on center each way.
2. Top reinforcement – Place reinforcement on special standee support bars. Spacing between supports shall not exceed 4’-0” on center each way. The depth of the supports shall provide the specified clearance from the bars to the top of the concrete. The design of the standees shall be the responsibility of the Contractor.
3. Place non-coated reinforcement supported from formwork on reinforcement supports made of concrete, metal, or plastic. For coated reinforcement, the supports and ties shall be constructed with a matching coating.

F. Welded wire reinforcement - Extend welded wire fabric to within 2 in. of the concrete edge. Lap edges and ends of fabric sheets a minimum of one mesh spacing. Support welded wire fabric during placing of concrete to ensure required positioning in the slab. Do not place welded wire fabric on grade and subsequently raise into position in concrete.

G. Column dowels - Furnish and use templates for placement of all column dowels.

H. Field bending or straightening - Reinforcing bar sizes No. 3 through No. 5 may be bent cold the first time provided reinforcing bar temperature is above 32 F. For other bar sizes, preheat reinforcing bars before bending. Repair any coatings that were damaged during bending.

I. Field cutting of reinforcement - Reinforcement shall not be cut in the field except when specifically permitted in writing by the Engineer. Do not flame cut epoxy-coated reinforcement. Repair any coatings that were damaged during cutting.

J. Do not continue reinforcement or other embedded metal items bonded to concrete through expansion joints. Dowels bonded on only one side of a joint and waterstops shall extend through the joint.

3.5 SPLICING

A. Provide splice types as indicated on the drawings. Splice reinforcing bars only at locations shown on the structural drawings shop drawings. Unauthorized or unscheduled splices not approved by the Engineer in writing will not be accepted.

B. All lap splices in reinforcing steel shall be contact lap splices, unless specifically detailed and labeled otherwise on the drawings. All contact lap splice lengths shall be Class B minimum. The Class B splice length for uncoated reinforcement is defined as 1.3 times the development length (Ld) given in Section 3.2 above. For epoxy coated reinforcement the Class B splice length is 1.95 times the development length (Ld).

3.6 MISCELLANEOUS REINFORCEMENT

A. Shrinkage And Temperature Reinforcement - Provide shrinkage and temperature reinforcement (as required by ACI 318) at right angles to main top and bottom bars for all structural slabs.

B. Placement Of Welded Wire Fabric - Wherever welded wire fabric is specified as reinforcement in pan joist or other slabs, it shall be continuous and properly lapped one full wire spacing plus 2" across the entire concrete surface and not interrupted by beam or girders.

C. Placement Of Column Dowels And Anchor Bolts - Dowels for columns, plinths, and pilasters and anchor bolts shall be accurately set using 1/8" thick steel templates.

D. Reinforcement In Topping Slabs - Provide welded smooth wire fabric minimum 6 x 6 W1.4 x W1.4 in all topping slabs, unless specified otherwise on the drawings.

E. Reinforcement In Housekeeping Pads - Provide welded smooth wire fabric 6 x 6 W2.9 x W2.9 minimum in all housekeeping pads supporting mechanical equipment unless detailed otherwise on the drawings.

END OF SECTION 032000

SECTION 033000 – CAST-IN-PLACE CONCRETE

PART 1 - GENERAL

1.1 DESCRIPTION OF WORK

A. This Performance Specification covers cast-in-place structural concrete. Provisions of this Performance Specification shall govern except where other provisions are specified in the Contract Documents.

B. Extent of concrete work is shown in the Contract Documents. Furnish all labor, materials, services, equipment and hardware required in conjunction with or related to the forming, delivery and pouring of all poured-in-place concrete work.

C. Concrete paving, curbing and sidewalks are specified in Division 2. Concrete Formwork, Reinforcement, Architectural Concrete, Precast Concrete, Post-Tensioned Concrete and special requirements for Tilt-up Concrete Construction are specified in other Division 3 sections. Testing of concrete is included in Section 014100. Grout under steel base plates, and concrete in pan filled steel stairs, is included in Section 051200.

1.2 DEFINITIONS

A. Contract Documents - The Structural AND Architectural drawings, and the drawings of the other design disciplines. The Contract Documents shall include all schedules, notes and details. Contract Documents may be amended during the course of construction via Bulletins, Requests for Information (RFI), supplemental sketches, etc. issued by the design team.

B. Exposed Condition – any area of the structure that is permanently exposed to the outside air including, but not limited to, parking garages, balconies, exterior corridors, architecturally exposed concrete, etc. Note that exposed conditions may also be categorized as severe or moderate exposures.

C. Severe Exposure – any area of the structure that is within 1,000 feet of the high water mark of adjacent sea water; or, is exposed to deicing or other aggressive chemicals, or where the concrete may become highly saturated by continual contact with moisture or free water prior to freezing.

D. Moderate Exposure – any area of concrete where freezing is expected but where the concrete is not exposed to deicing or other aggressive chemicals.

E. Mild Exposure – all exposures other than severe and moderate exposures.

F. Class of Concrete – For the purposes of this project, the term “class of concrete” as used in this Specification and in ACI 318 shall mean the same as an individual “concrete mix design.”

G. Refer to the "Specifications for Structural Concrete (ACI 301)" published by the American Concrete Institute for all other definitions included in this Specification. The definitions provided throughout the ACI Standard are included herein by reference.

1.3 REFERENCE STANDARDS

A. The following ACI Standards are referred to in this specification:
ACI 117 Specifications for Tolerances for Concrete Construction and Materials
ACI 302.1R Guide for Concrete Floor and Slab Construction
ACI 305R Hot Weather Concreting
ACI 318 Building Code Requirements for Structural Concrete and Commentary

B. ASTM Standards - Refer to Section 1.3.1.2 of the "Specifications for Structural Concrete (ACI 301)" published by the American Concrete Institute for the ASTM Standards which are included herein by reference.

C. Refer to the "Specifications for Structural Concrete (ACI 301)" published by the American Concrete Institute for other referenced standards included in this Specification.

D. The following standards-producing organizations are referenced in this Specification:

1. American Concrete Institute (ACI)
2. U.S. Army Corps of Engineers [COE (CRD)]

1.4 SUBMITTALS

A. Submittals required in this Reference Specification shall be submitted for review and acceptance. Submit the following data and drawings for review and acceptance prior to any fabrication, execution or erection:

1. Submit the following mandatory data:

a. Mix Designs: Submit mix designs that include, as a minimum, the information below for each class of concrete that is to be provided for the project as specified herein. Submit the qualifying test data that supports each mix design as required herein.

(1) Names of project, contractor and concrete supplier (including all contact information for the latter).
(2) Concrete mix information including mix designation, strength at 28 days, concrete type (normal or light weight), method of placement, and structural member for which concrete shall be used (footings, columns, etc.), and exposure condition where concrete will be placed (see Section 1.2).
(3) Method of mix design preparation: field experience method or trial mixture method.
(4) Historical data if mix is based on field experience method. Trail mix data if based on trial mixture method. All data must comply with ACI 318.

(5) Proposed mix design including all constituent materials by weight and proportion; aggregate sizes, types and gradation; slump, air content, water-cement ratio, and chloride-ion concentration; and all admixtures and their manufacturers.
(6) Calculations in accordance with Section 2.3.
(7) Clearly identify on the mix design if the inclusion of any admixtures will significantly increase the setting time of the concrete.

b. Testing agency reports - Testing agencies shall report results of concrete and concrete materials tests and inspections performed during the course of the Work to the Owner, Architect/Engineer, Contractor, and the concrete supplier. Strength test reports shall include location in the Work where the batch represented by test was deposited and the batch ticket number. Reports of strength tests shall include detailed information of storage and curing of specimens before testing. Final reports shall be provided within seven (7) days of test completion.
c. Construction Joints: Submit drawing of proposed construction joint locations in concrete for slab on grade, mat foundations, structural floors, roofs and walls. Submit any additional or changed reinforcing that is required at construction joints that differs from that shown on the drawings.

2. Any other information as requested by the Engineer-of-Record.
3. Items submitted for review and approval – a minimum of two (2) copies up to a maximum of five (5) copies, with one (1) copy being retained by the Engineer. Review comments (a/k/a “redlines”) provided by the Engineer shall be transferred to a total of five (5) submittal sets. The Contractor is responsible for transferring redlines on to any sets in excess of the five (5) sets specified.
4. Items submitted for record purposes only – One (1) copy to be retained by the Engineer. Additional copies to be provided directly to others as directed.

B. Submittals shall be reviewed in the following manner:

1. Shop Drawings represent the submitter’s interpretation of the Contract Documents. Shop Drawings are not in of themselves Contract Documents. In no way shall changes initiated by the submitter and included in these Shop Drawings supersede or revise the Contract Documents. Checking of the Shop Drawings is only for the general conformance with the design concept and general compliance with the Contract Documents. The Contractor is solely responsible for reviewing and verifying the Shop Drawings for information that pertains to means and methods, dimensions, fabrication processes, and the coordination of the Work between the various construction trades. Checking of the Shop Drawings by Engineer shall in no way relieve the Contractor of his responsibility for deviations from the Contract Documents, for any errors or omissions in the Shop Drawings, or for performing his own review of the Shop Drawings.
2. The Contractor shall review and approve all submittals prior to submitting them to the Architect/Engineer. Failure to review each submittal shall in no way relieve the Contractor of his own responsibility to correct items that do not comply with the Contract Documents.

3. Review comments (a/k/a “redlines”) provided by the Architect/Engineer shall apply to all subsequent pages and all subsequent sets of the submittal regardless of whether each page is redlined or not. Redlines shall be considered cumulative from submittal to submittal. The Architect/Engineer is not required to annotate or stamp every sheet.
4. Review comments for electronic submittals shall be provided in an electronic format only. It is the Contractor’s responsibility to ensure that electronic redlines are properly distributed to the subcontractor(s) and that said comments remain affixed to the electronic submittal (warning: electronic comments may not print on hard copies depending upon the software used by the person printing the reviewed submittal).
5. Revisions to shop drawings and calculations will be required in response to redlines provided by the Architect/Engineer. Such revisions are a natural part of the submittal review process and are to be expected. All costs associated with revising and re-submitting any shop drawing and/or calculations shall be borne solely by the Contractor and his subcontractors. Revising the field-use drawings to accommodate any redlines shall be the responsibility of the Contractor.
6. Structural members for which shop drawings have not been reviewed and approved shall not be fabricated, erected, or installed (no exceptions).

1.5 REQUESTS FOR INFORMATION (RFI)

A. The contractor and his sub-contractors may submit a Request for Information (“RFI”) on an as-needed basis. The purpose of the RFI is to obtain clarifications, request additional information, seek approval for a proposed alternate solution, etc. from the Design Team such that the construction of the Work may proceed in an efficient manner.

B. Each RFI shall contain the following minimum information:

1. A specific question for which an answer is requested.
2. The name of the company and person submitting the RFI
3. Additional cost associated with the RFI, if any
4. Explanatory sketches if required (highly recommended)
5. A proposed solution, if any

C. RFI’s shall be submitted and processed in the following manner:

1. All RFI’s shall be submitted directly to the Architect, who in turn will forward it to the Engineer. A copy may be sent directly to the Engineer, at the Contractor’s option and if approved by the Architect, but the official copy (the copy that is tracked) shall be the one submitted to the Architect.
2. RFI’s shall be submitted in writing only; verbal RFI’s will not be accepted nor answered. RFI’s submitted electronically shall be deemed as received when opened by the reviewer, and not when sent by the submitter or received by the reviewer’s server.
3. The Engineer’s response shall be submitted directly to the Architect who in turn will forward it to the Contractor. The Engineer may also send a courtesy copy directly to the Contractor.

4. RFI's that modify or amend the Contract Documents and/or will potentially result in a cost increase to the Project shall be approved in writing by both the Architect and Engineer before the Contractor proceeds with any work.
5. Any additional cost associated with the RFI shall be clearly identified (dollar values for material cost and number of days for schedule impact) at the time the RFI is submitted.

D. RFI's shall be submitted in accordance with the following schedule:

1. The Contractor shall incorporate into his schedule and allow for three (3) working days per each RFI for the Engineer to review and respond to the RFI.
2. It is the Contractor's responsibility for assuring that RFI's are provided in a timely manner such that the overall project Schedule is not adversely impacted.
3. A large number of multiple RFI's submitted at one time shall be considered as individual submittals, and the 3-day review period shall be cumulative per individual submittal.
4. Any RFI received after 2:00 pm shall be considered to have been received the next business day.

E. Any verbal discussions between the Design Team and the Contractor that modify or amend the Contract Documents and/or will potentially result in a cost increase to the Project shall be documented via a written RFI. It is the responsibility of the Contractor, not the Engineer, to submit a written confirming RFI. The Contractor proceeds at his own risk and expense if he performs work that was not documented by a confirming RFI.

1.6 QUALITY ASSURANCE

A. The Contractor, his sub-contractors and materials suppliers warrant that no asbestos related products are used on this project.

B. The Contractor is solely responsible for the quality control and quality assurance of the Work, including workmanship and materials furnished by his subcontractors and suppliers.

C. The Concrete Supplier and Contractor are solely responsible for determining the concrete proportions, admixtures, and surface treatments to produce the quality of concrete required by this Specification. The Concrete Supplier shall familiarize himself with the project requirements including, but not limited to, compressive strength, water-cement ratio, cement content, air content, and environmental conditions including project location, exposure characteristics, and where each mix is intended to be placed. The Contractor is solely responsible for ordering and placing the correct mix design.

D. The Materials Supplier(s) and Contractor are solely responsible for insuring that the constituent materials provided to the project comply with the requirements of this Specification.

E. The Contract Documents are complementary and shall be used in conjunction with each other. Items required by one design discipline shall be as binding as if required by all. Therefore, the contractor must provide copies of the structural and architectural drawings, and those of any other applicable design discipline, to each of the structural subcontractors prior to Bid. All bids must be based on a review of all of these drawings and not just the structural drawings.

F. The Contractor shall include in his services to the Owner a careful and detailed review of the Contract Documents. The purpose of the review is to identify any "scope gaps" that may exist between the various portions of the Contract Documents. The Contractor shall compare the Contract Documents and shall immediately bring to the engineer's attention, in writing, any error, omission, or inconsistency that he may discover. All conflicts shall be brought to the architect's attention prior to the commencement of any work.

G. In event of any conflict among documents, including architectural and structural drawings and specifications, notify the Architect/Engineer prior to submitting proposal. In case of conflict between and/or among the structural drawings and specifications, the strictest interpretation shall govern, unless specified otherwise in writing by the Architect/Engineer.

H. Concrete materials and operations may be tested and inspected as the work progresses. Failure to detect defective work or material early will not prevent rejection if a defect is discovered later nor shall it obligate the Architect/Engineer for final acceptance. Inspection or testing by others shall in no way relieve the Contractor of his responsibility to perform the Work in accordance with the Contract Documents.

1.7 QUALIFICATIONS

A. The concrete supplier shall have a minimum of five (5) years experience in the manufacturing of ready-mixed concrete products complying with ASTM C94 requirements for production facilities and equipment. The supplier shall be certified according to the National Ready Mixed Concrete Association's Certification of Ready Mixed Concrete Production Facilities.

B. The contractor and concrete placing and finishing subcontractor shall have a minimum of five (5) years' experience with buildings of the same or greater size, and the installation of concrete similar in material, design and extent to that indicated for this Project and whose work has resulted in construction with a record of successful service performance.

1.8 SUBSTITUTIONS AND CHANGES

A. No substitutions, revisions, or any other modifications to the Contract Documents, proposed by the Contractor, shall be made unless the following conditions are met:

1. All substitutions, revisions, or any other modifications are clearly identified as such on the shop drawings via a "cloud" or "box." Each area so identified must be specifically approved by the Architect/Engineer in writing.

2. There is a substantial cost or schedule advantage to the Owner; or that the proposed revision is necessary to obtain the required materials or methods at the proper times to accomplish the work. In no case shall any revision proposed by the Contractor result in additional cost to the Owner.

B. Cost of Changes

1. The Contractor shall notify the Architect/Engineer in writing if a substitution or change will result in a cost increase to the project within five (5) working days of the date the change is proposed or initiated, regardless of who proposed or initiated the change. The Contractor shall submit to the Architect/Engineer in writing the cost of the substitution or change no later than fifteen (15) working days after the change is proposed or initiated.
2. The Contractor shall not be compensated for any change orders for a substitution or change, regardless of who proposed or initiated the change, where the Architect/Engineer are not notified of the cost of the change in accordance with the above.
3. The Architect/Engineer reserves the right to modify or cancel the substitution or change after their review of the cost information provided by the Contractor.

C. Value Engineering

1. Substitutions, revisions, or any other modifications to the Contract Documents for the purposes of reducing the cost of construction shall be made when requested by The Owner.
2. All such revisions shall include the cost of any re-design that is required of the Architect/Engineer.

1.9 PROTECTION OF IN-PLACE CONCRETE

A. Do not allow construction loads to exceed the superimposed load that the structural member, with necessary supplements support, is capable of carrying safely and without damage.

B. During the curing period, protect concrete from damaging mechanical disturbances including load stresses, shock, and harmful vibration. Protect concrete surfaces from damage by construction traffic, equipment, materials, rain or running water, and other adverse weather conditions.

1.10 PROVISION FOR OTHER WORK

A. Provide for installation of inserts, hangers, metal ties, anchors, bolts, angle guards, dowels, thimbles, slots, nailing strips, blocking, grounds and other fastening devices required for attachment of work. Properly locate in cooperation with other trades and secure in position before concrete is poured. Do not install sleeves in any concrete slabs, beams or columns except where shown on the drawings or upon written approval of the Engineer.

B. Protect adjacent finish materials against damage and spatter during concrete placement.

1.11 STOCKPILE CONCRETE

A. The purpose of “stockpile” concrete is to provide a budget allowance to cover shortfalls and unforeseen circumstances encountered during the construction process. This concrete shall be used as directed by the Engineer as circumstances dictate.

B. The quantity of stockpile concrete shall be equal to 2.5% (0.025) of the total scheduled concrete volume.

C. The cost of the stockpile concrete shall be included in the cost of the Project. Any unused stockpile concrete shall be credited back to the Owner. The cost of this concrete shall be based on a unit cost per cubic yard and shall include the cost of materials, labor, forming and shoring.

PART 2 - PRODUCTS

2.1 CONCRETE MATERIALS

A. Cementitious Materials – Concrete mix designs shall include portland cement. In addition, they may also contain one or more of the following cementitious materials:

1. Portland cement shall conform to ASTM C 150 Type I or Type III. Type V shall be used in concrete that is placed in severe exposures.
2. Blended hydraulic cement conforming to ASTM C 595.
3. Pozzolanic mineral admixture conforming to ASTM C 618.
4. Fly ash shall conform to ASTM C 618, Class C or Class F (Class F is preferred). The minimum amount shall be 15% by weight, but not to exceed 25%, of the total cementitious materials.
5. Ground granulated blast-furnace slag conforming to ASTM C 989.
6. Silica fume conforming to ASTM C 1240.

B. Aggregates

1. Aggregates shall conform to ASTM C 33 or ASTM C 330, as applicable. When a single size or a combination of two or more sizes of coarse aggregates is used, the final grading shall conform to the grading requirements of ASTM C 33.
2. Aggregates used in concrete shall be obtained from the same sources and have the same size ranges as the aggregates used in the concrete represented by submitted historical data or used in trial mixtures.

C. Water - Mixing water for concrete shall meet the requirements of ASTM C 94.

D. Admixtures - Admixtures shall meet the requirements of the applicable ASTM standards.

2.2 PERFORMANCE AND DESIGN REQUIREMENTS

A. Concrete Strength - The concrete strength is shown in the Contract Documents, but shall not be less than 4,000 psi for any concrete member.

B. The cementitious-materials content shall be adequate for the concrete to satisfy the specified requirements for strength, water-cementitious materials ratio and finishing ability.

C. Slump - Concrete shall have, at the point of delivery, a slump of 4 in. Exceptions: when use of a Type I or II plasticizing admixture or a Type F or G high-range water-reducing admixture the concrete shall have a slump of 2 to 4 in. before the admixture is added and a maximum slump of 8 in. at the point of delivery after the admixture is added.

D. Size Of Coarse Aggregate -Nominal maximum size of coarse aggregate shall not exceed 1" for foundations and columns or ¾" for all other elements.

E. Air content - The minimum air content at the point of delivery shall be 4.5% for 1" aggregate and 5.0% for ¾" aggregate. All concrete subject to severe exposure conditions shall be air-entrained.

F. Admixtures - The Concrete Supplier is solely responsible for determining which admixtures are necessary to meet or exceed the performance requirements of this specification.

G. Chloride-Ion Concentration - Maximum water-soluble chloride-ion concentrations in hardened concrete at ages from 28 to 42 days contributed from the ingredients including water, aggregates, cementitious materials, and admixtures shall not exceed 0.30% by weight of cement.

H. Concrete Temperature

1. The maximum temperature of concrete as delivered shall not exceed 90 F, as measured at the truck chute. Higher temperatures that may apply to DOT projects are not applicable and will not be approved.
2. The temperature of concrete mixed and delivered to the job site shall not be less than 70° F. Concrete shall not be placed if its temperature will fall below 55° F immediately after placement.

I. Water-Cementitious Materials Ratio

1. The water-cementitious materials ratio of the concrete for each portion of the work shall not exceed 0.45 for non-air-entrained concrete and 0.42 for air-entrained concrete.
2. The water-cementitious materials ratio of the concrete shall not exceed 0.40 for any area in exposed conditions, as defined in Section 1.2, regardless of the concrete strength stated in the Contract Documents.

J. All concrete shall be proportioned for a maximum allowable unit shrinkage of 0.03% measured at 28 days after curing in lime water as determined by ASTM C157 (using air storage).

K. It is the responsibility of the concrete supplier to insure that the parameters of the concrete mix designs (water cement ratio, cementitious content, air content, admixtures and other parameters stated herein) are appropriate for the anticipated environmental conditions for the project, and meet or exceed the performance requirements stated within this Specification.

2.3 PROPORTIONING OF CONCRETE MIXES

A. Proportion concrete to provide workability and consistency so concrete can be worked readily into forms and around reinforcement without segregation or bleeding, and to provide an average compressive strength adequate to meet the performance requirements of this Specification.

B. Standard deviation – Calculate the standard deviation in accordance with ACI 318 Chapter 5.3.1.

C. Required average compressive strength - Calculate the required average compressive strength f'cr in accordance with ACI 318 Chapter 5.3.2.

D. Provide documentation indicating the proposed concrete proportions will produce an average compressive strength equal to or greater than the required average compressive strength in accordance with ACI 318 Chapter 5.3.3 or Chapter 5.4 as applicable.

2.4 RELATED MATERIALS

A. Provide waterstops at all construction joints, joints in all foundation walls below grade, and where also shown on the drawings. Provide flat, dumbbell type or center-bulb type, and size to suit joints.

B. Liquid membrane-forming curing and curing and sealing compounds shall comply with ASTM C1315.

C. Chemical curing and floor hardening compounds shall comply with ASTM C418.

D. Apply monomolecular film forming compound applied to exposed concrete slab surfaces for temporary protection from rapid moisture loss in hot weather conditions. Verify that compound is compatible with all coverings and surface treatments to be applied.

E. Fibrous Reinforcement - Collated, fibrillated, polypropylene fibers specifically manufactured for use in concrete complying with ASTM C1116, Section 4.1.3.

PART 3 - EXECUTION

3.1 PRODUCTION AND DELIVERY

A. Measuring, Batching, And Mixing - Production facilities shall produce concrete of the specified quality and conforming to the requirements of this Performance Specification.

B. Delivery - Concrete shall possess the specified characteristics in the freshly mixed state at the point of placing. Transport and deliver concrete in equipment conforming to the requirements of ASTM C 94.

1. Slump Adjustment - The slump may be adjusted to the required value by adding water up to the amount allowed in the accepted mixture proportions by the Concrete Supplier. Addition of water shall be in accordance with ASTM C 94, but shall not exceed the specified water-cement ratio.
2. Do not add water to the concrete after plasticizing or high-range water-reducing admixtures are added to the concrete at the site to achieve flowable concrete.
3. Measure slump and air content of air-entrained concrete after slump adjustment, to verify compliance with specified requirements.
4. Time for completion of discharge shall comply with ASTM C 94 but shall not exceed 90 minutes.

3.2 HANDLING, PLACING, AND CONSTRUCTING

A. Preparation

1. Do not place concrete until data on materials and mixture proportions are accepted.
2. Remove hardened concrete and foreign materials from the inner surfaces of conveying equipment.
3. Before placing a concrete slab on grade, clean foreign materials from the subgrade, prepare the subgrade in accordance with the requirements of the Geotechnical Report, verify subgrade is free of frost, ice free water and no muddy or soft spots.

B. Placement of concrete

1. Weather considerations - Do not begin to place concrete while rain, sleet, or snow is falling unless adequate protection is provided. Do not allow rain water to increase mixing water or to damage the surface of the concrete. Refer to other sections for cold and hot weather concreting.
2. Conveying - Convey concrete from mixer to the place of final deposit rapidly by methods that prevent segregation or loss of ingredients and will ensure the required quality of concrete. Do not use aluminum pipes or chutes. Use acceptable conveying equipment of a size and design that will prevent cold joints from occurring. Clean conveying equipment before each placement.
3. Depositing - Deposit concrete continuously in one layer or in layers to have fresh concrete deposited on in-place concrete that is still plastic. Do not deposit fresh concrete on concrete that has hardened sufficiently to cause formation of seams or planes of weakness within the section.
4. Consolidating - It is imperative that the concrete be properly consolidated; failure to do so will result in the decreased durability of the concrete. Consolidate concrete by vibration only and do not use vibrators to move concrete within the forms.

C. Finishing Unformed Surfaces

1. Finish slab surfaces in accordance with the finish(es) as specified by the Architect.
2. Measuring Tolerances for Slabs

   a. Floor installations 10,000 ft^2 or less in total project floor area (excluding residential condominium projects), measure floor finish tolerances in accordance with the "10-ft straightedge method" as described in ACI Standard 117.
   b. For floor installations exceeding 10,000 ft^2 in total project floor area, and all residential condominium projects, floor flatness and levelness shall be measured using the F-number system as described in ACI Standard 117 and the procedure set forth in ASTM E1155.

D. Curing and Protection - Curing The Contractor shall protect freshly placed concrete from premature drying and excessive cold or hot temperatures. Curing shall commence as soon as free water has disappeared from the concrete surface after placing and finishing. Curing shall be in accordance with ACI 301 procedures. Avoid rapid drying at the end of the curing period.

E. Construction joints – The contractor shall submit his proposed locations for all construction joints to the Engineer for review.

F. Contraction (Control) Joints in Slabs-on-Ground: The Contractor shall layout all control and construction joints and submit the layout for Architect/Engineer review. All joints shall be placed in accordance with the following criteria: i) place joints along column grid lines; and ii) do not space joints farther than twenty (20) feet apart; and iii) do not space joints at distances greater than a ratio of 2 to 1 (long dimension to short dimension). Use one of the two following methods to create the joints.

3.3 HOT WEATHER CONCRETING

A. The maximum acceptable concrete temperature at the truck chute shall be 90° F. Hot weather concreting practices specified herein shall be followed, all or in part as required, to limit the concrete temperature at the truck discharge point to 90° F or lower.

END OF SECTION 033000

SECTION 042010 – REINFORCED CONCRETE MASONRY

PART 1 - GENERAL

1.1 DESCRIPTION OF WORK

A. This Reference Specification covers materials, fabrication, placement, and tolerances of reinforced concrete masonry including concrete masonry units, steel reinforcement, grout and mortar, and masonry accessories for all structural masonry uses in general building construction. Provisions of this Specification shall govern except where other provisions are specified in the Contract Documents.

B. The intent of this Specification is to provide a single source reference and avoid having two separate sections. This Specification is therefore a combination of Section 042200, Concrete Unit Masonry, and the Division 3 section governing reinforcing steel. The requirements of this Specification that pertain to reinforcing steel apply to steel used in reinforced masonry construction only.

C. The extent of the reinforced masonry work is shown in the Contract Documents. Furnish all labor, materials, services, equipment and hardware required in conjunction with or related to the detailing, fabricating, delivery and placing of the masonry work.

D. Cast-in-place concrete and steel reinforcement for that concrete are covered in Division 3 sections. Clay, glass, terracotta and adobe unit masonry are not included in this section. Autoclaved aerated Concrete (AAC) and autoclaved cellular concrete (ACC) are not included in this section.

1.2 DEFINITIONS

A. Contract Documents - The Structural AND Architectural drawings, and the drawings of the other design disciplines. The Contract Documents shall include all schedules, notes and details. Contract Documents may be amended or clarified during the course of construction via Bulletins, Requests for Information (RFI), supplemental sketches, etc. issued by the Design Team. The Contract Documents are not assembly instructions nor are they layout drawings.

B. Exposed Condition – any area of the structure that is permanently exposed to the outside air including, but not limited to, parking garages, balconies, exterior corridors, architecturally exposed concrete, etc. Note that exposed conditions may also be categorized as severe or moderate exposures.

C. Severe Exposure – any area of the structure that is within 1,000 feet of the high water mark of adjacent sea water; or, is exposed to deicing or other aggressive chemicals, or where the concrete may become highly saturated by continual contact with moisture or free water prior to freezing.

D. Moderate Exposure – any area of concrete where freezing is expected but where the concrete is not exposed to deicing or other aggressive chemicals.

E. Mild Exposure – all exposures other than severe and moderate exposures.

F. Grout Pour - The total height of masonry to be grouted prior to the erection of additional masonry. A grout pour consists of one or more gout lifts.

G. Grout Lift - An increment of grout height within a total grout pour. A grout pour consists of one or more grout lifts.

H. Cleanouts - Openings that are sized and spaced to allow removal of debris from the bottom of the grout space.

I. High-Lift Grouting – Grouting that requires the use of clean-outs.

J. Low-Lift Grouting – Grouting that does not require the use of clean-outs.

K. Collar joint - Vertical longitudinal space between wythes of masonry or between masonry and back up construction, which is permitted to be filled with mortar or grout.

L. Wythe - Each continuous vertical section or layer of a wall, one masonry unit in thickness.

1.3 REFERENCE STANDARDS

A. The following ASTM Standards (most recent editions) are referred to in this specification:

ASTM A36	Specification for Carbon Structural Steel
ASTM A82	Specification for Steel Wire, Plain, for Concrete Reinforcement
ASTM A123	Specification for Zinc (Hot-Dip Galvanized) Coating on Iron
ASTM A153	Specification for Zinc Coating (Hot-Dip) on Iron and Steel Hardware
ASTM A185	Specification for Steel Welded Wire Reinforcement, Plain, for Concrete
ASTM A307	Specification for Carbon Steel Bolts and Studs, 60,000 psi Tensile Strength
ASTM A416	Specification for Steel Strand, Uncoated Seven-Wire for Prestressed Concrete
ASTM A496	Specification for Steel Wire, Deformed, for Concrete Reinforcement
ASTM A510	General Requirements for Wire Rods and Coarse Round Wire, Carbon Steel
ASTM A615	Specification for Deformed and Plain Billet-Steel Bars for Concrete Reinforcement
ASTM A706	Specification for Low-Alloy Steel Deformed Bars for Concrete Reinforcement
ASTM A951	Specification for Masonry for Joint reinforcement
ASTM A1008	Specification for Steel, Sheet, Cold-Rolled, Carbon, Structural, High Strength Low-Alloy, and High-Strength Low-Alloy with Improved Formability
ASTM C90	Specification for Load-Bearing Concrete Masonry Units
ASTM C91	Standard Specification for Masonry Cement
ASTM C404	Standard Specification for Aggregates for Masonry Grout
ASTM C476	Specification for Grout for Masonry

ASTM C920 Specification for Elastomeric Joint Sealants
ASTM C1329 Standard Specification for Mortar Cement
ASTM D994 Specification for Preformed Expansion Joint Filler for Concrete
ASTM D1056 Specification for Flexible Cellular Materials- Sponge or Expanded Rubber
ASTM D1187 Specification for Asphalt-Base Emulsions for Use as Protective Coatings for Metal
ASTM D1227 Specification for Emulsified Asphalt Used as a Protective Coatings Roofing
ASTM D2000 Classification System for Rubber Products in Automotive Applications
ASTM D2287 Specification for Non-rigid Vinyl Chloride polymer and Copolymer Molding and Extrusion Compounds

B. The following ACI Standards (most recent editions) are referred to in this specification:
ACI 117 Standard Specifications for Tolerances for Concrete Construction and Materials
ACI 315 Details and Detailing of Concrete Reinforcement
ACI 530 Building Code Requirements and Specification for Masonry Structures (ACI 530/TMS 402/TMS 602)

1.4 SUBMITTALS

A. Submittals required in this Reference Specification shall be submitted for review. Submit the following data and drawings for review prior to any fabrication, execution or erection:

1. Submit the following mandatory data:

a. Submit fully dimensioned shop drawings showing layout of all masonry walls including door, window and louver openings; horizontal penetrations; top of wall elevations; etc.
b. Submit shop drawings showing size, quantity, length, and grade of reinforcing bars; fabrication dimensions; lap splice lengths and locations for placement of reinforcement and reinforcement supports.
c. Mix designs and Test Results
(1) Mortar - Mix designs and test results indicating type and proportions of ingredients in compliance with the proportion specification of ASTM C1329.
(2) Grout - Mix designs and test results indicating type and proportions of ingredients in compliance with the proportion specification of ASTM C476.

d. Tonnage for reinforcing steel

2. Submit the following data only when requested by the Engineer:

a. The manufacturer of the concrete masonry units shall provide a letter stating that the block complies with the requirements of this specification and the fire-rating requirements specified in the architectural documents (see Section 2.1).

b. Submit mill certificates for all reinforcement
c. Product data for expansion and control joints
d. Product data for joint reinforcement, anchors, ties and accessories
e. Unit cost data

B. Submittals shall be provided in electronic format (PDF) only, and review comments to the submittals shall be returned in the same format.

C. Submittals shall be provided in accordance with the following schedule:

1. The Contractor shall incorporate into his schedule and allow for a minimum of ten (10) working days per each item submitted for the Engineer's review of the submittal.
2. It is the Contractor's responsibility for assuring that submittals are provided in a timely manner such that the overall project schedule is not adversely impacted.
3. Multiple items submitted at one time shall be considered as individual submittals, and the 10-day review period shall be cumulative per individual submittal.
4. Any submittals received after 2:00 pm shall be considered to have been received the next business day. Electronic submittals shall be deemed as received when opened by the reviewer and not when sent by the submitter or received by the reviewer's server.

D. Submittals shall be reviewed in the following manner:

1. Submittals and shop Drawings are NOT part of the Contract Documents and only represent the submitter's interpretation of the Contract Documents. All submittals are of the Contractor, by the Contractor and for the Contractor's own use in his work plan, and for demonstrating his proposed construction means, methods, techniques, sequences and procedures to carry out requirements of the actual Contract Documents.
2. The Contractor is solely responsible for reviewing, verifying and approving the submittal(s), and the coordination of the Work between the various construction trades. It is the Contractor's responsibility to verify dimensions and elevations; order quantities; give assembly or fabrication instructions, and produce layout drawings for field use.
3. It is the Contractor's responsibility to coordinate his subcontractors' submittals. Any redlines or comments made to one submittal shall be transferred and applied by the Contractor to the submittal(s) of the other affected subcontractor(s).
4. The Contractor shall mark each submittal as "Approved" prior to forwarding them to the Architect/Engineer. Submittals that are not approved by the Contractor first will not be reviewed by the Architect/Engineer.
5. In no way shall changes initiated by the submitter and included in the submittal(s) supersede or revise the Contract Documents.
6. Any subsequent review of the submittal(s) by the Engineer shall in no way relieve the Contractor of his own responsibility to review and approval the submittal(s), to identify and correct deviations from the Contract Documents, or in any way protect the Contractor.

7. Review of the submittals by the Engineer is only for the conceptual compliance with the design intent and general compliance with the Contract Documents. Those items to be reviewed by the Engineer are solely at the discretion of the Engineer, and not all items will be reviewed by the Engineer.
8. Review comments (a/k/a “redlines”) provided by the Architect/Engineer shall apply to all subsequent pages and all subsequent sets of the submittal regardless of whether each page is redlined or not. Redlines shall be considered cumulative from page to page and submittal to submittal. The Architect/Engineer is not required to review, annotate or stamp every sheet.
9. It is the Contractor’s responsibility to ensure that electronic redlines are properly distributed to the subcontractor(s) and that said comments remain affixed to the electronic submittal (warning: electronic comments may not print on hard copies depending upon the software used by the person printing the reviewed submittal).
10. Revisions to shop drawings and calculations may be required in response to redlines provided by the Architect/Engineer. Such revisions are a normal part of the submittal review process and are to be expected. All costs associated with revising and re-submitting any shop drawing and/or calculations shall be borne solely by the Contractor and his subcontractors. Revising the field-use drawings to accommodate any redlines shall be the responsibility of the Contractor.
11. Any structural members for which mandatory shop drawings have not been reviewed and approved by the Contractor, and reviewed by the Engineer, but are fabricated, erected, or installed are done so at the Contractor’s risk.
12. The Engineer/Architect is not required to download or upload submittals using any specific tracking software mandated by the Contractor.
13. The Engineer shall not sign and seal any submittal.

1.5 REQUESTS FOR INFORMATION (RFI)

A. The Contractor may submit a Request for Information (“RFI”) on an as-needed basis. The purpose of the RFI is for the Contractor to obtain clarifications or request additional information from the Design Team, or to propose an alternate solution such that the construction of the Work may proceed in an efficient manner.

B. RFI’s shall be submitted in writing in electronic format (PDF) only, and responses to the RFI’s shall be returned in the same format.

C. Each RFI shall contain the following minimum information:

1. A specific question for which an answer is requested.
2. The name of the company and person submitting the RFI
3. Additional cost associated with the RFI
4. Explanatory sketches or photos (highly recommended)
5. A proposed solution, if any

D. RFI’s shall be submitted and processed in the following manner:

1. All RFI’s shall be submitted directly to the Architect, who in turn will forward it to the Engineer. A copy may be sent directly to the Engineer, at the Contractor’s

option and if authorized by the Architect, but the official copy (the copy that is tracked) shall be the one submitted to the Architect.

2. Verbal RFI's will not be accepted nor answered. RFI's submitted via text messages (SMS, MMS, etc.) will not be accepted nor answered.
3. RFI's submitted via electronic mail shall be deemed as received when opened by the reviewer and not when sent by the submitter or received by the reviewer's server.
4. The Engineer's response shall be submitted directly to the Architect who in turn will forward it to the Contractor. The Engineer may also send a courtesy copy directly to the Contractor if authorized by the Architect.
5. RFI's that modify or amend the Contract Documents and/or will potentially result in a cost increase to the Project shall be authorized in writing by both the Architect and Engineer before the Contractor proceeds with any work.
6. Any additional cost associated with the RFI shall be clearly identified (dollar values for material cost and number of days for schedule impact) at the time the RFI is submitted.
7. The Engineer/Architect is not required to download RFI's or upload responses using any specific tracking software mandated by the Contractor. All such bookkeeping tasks are the sole responsibility of the Contractor.

E. RFI's shall be submitted in accordance with the following schedule:

1. The Contractor shall incorporate into his schedule and allow for three (3) working days per each RFI for the Engineer to review and respond to the RFI.
2. It is the Contractor's responsibility for assuring that RFI's are provided in a timely manner such that the overall project Schedule is not adversely impacted.
3. A large number of multiple RFI's submitted at one time shall be considered as individual submittals, and the 3-day review period shall be cumulative per individual submittal.
4. Any RFI received after 2:00 pm shall be considered to have been received the next business day.

F. Any verbal discussions between the Design Team and the Contractor that could possibly modify or amend the Contract Documents and/or will potentially result in a cost increase to the Project shall be documented via a written RFI. It is the responsibility of the Contractor, not the Engineer, to submit a written confirming RFI. The Contractor proceeds at his own risk and expense if he performs work that was not documented by a confirming RFI.

1.6 QUALITY ASSURANCE

A. The Contractor, his sub-contractors and materials suppliers warrant that no asbestos related products are used on this project.

B. The Contractor is solely responsible for the quality control and quality assurance of the Work, including placement, workmanship and materials furnished by his subcontractors and suppliers.

C. The Materials Supplier(s) and Contractor are solely responsible for insuring that the constituent materials provided to the project comply with the requirements of this Specification.

D. The Contract Documents are complementary and shall be used in conjunction with each other. Items required by one design discipline shall be as binding as if required by all. Therefore, the contractor must provide copies of the structural and architectural drawings, and those of any other applicable design discipline, to each of the structural subcontractors prior to Bid. All bids must be based on a review of all of these drawings and not just the structural drawings.

E. The Contractor shall include in his services to the Owner a careful and detailed review of the Contract Documents. The purpose of the review is to identify any “scope gaps” that may exist between the various portions of the Contract Documents. The Contractor shall compare the Contract Documents and shall immediately bring to the engineer’s attention, in writing, any error, omission, or inconsistency that he may discover. All conflicts shall be brought to the architect’s attention prior to the commencement of any work.

F. In the event of any conflict among documents, including architectural and structural drawings and specifications, notify the Architect/Engineer, in writing, prior to submitting bids. In case of conflict between and/or among the structural drawings and specifications, the strictest interpretation shall govern, unless specified otherwise in writing by the Architect/Engineer.

G. Materials and operations may be tested and inspected by the Owner as work progresses. Failure to detect defective work or material early will not prevent rejection if a defect is discovered later nor shall it obligate the Architect/Engineer for final acceptance. Inspection or testing by others shall in no way relieve the Contractor of his responsibility to perform the Work in accordance with the Contract Documents.

1.7 QUALIFICATIONS

A. The concrete block, grout and mortar supplier(s) shall have a minimum of five (5) years’ experience in the manufacturing of such products. The supplier(s) must be certified according to the National Concrete Masonry Association.

B. The reinforcement supplier shall have a minimum of five (5) years’ experience in the fabrication of steel reinforcement used in concrete and masonry construction.

C. The masonry and reinforcement placing subcontractors shall have a minimum of five (5) years’ experience with buildings of at least this size, and the installation of reinforced masonry similar in material, design and extent to that indicated for this Project and whose work has resulted in construction with a record of successful service performance.

1.8 MATERIALS DELIVERY, STORAGE, AND HANDLING

A. Keep all masonry units and mortar bags off the ground, under cover and in a dry location. Store and handle masonry units to prevent their deterioration or damage due to moisture, temperature changes, contaminants or other causes. Limit moisture absorption of concrete masonry units during delivery and until time of installation.

B. All masonry materials must be protected from wetting by capillary action, rain, or snow, and protected from mud, dust, or other materials and contaminants likely to cause staining or defects.

C. Protect the steel reinforcement and accessories from bending, coating with earth, oil, or other material that would otherwise damage the reinforcement.

D. Do not store materials on the structure in a manner that might exceed the allowable loads on or cause distortion or damage to members or supporting structures.

E. Deliver all materials undamaged to the site and in a manner to ensure the uninterrupted progress of work.

F. The Contractor shall protect the Work during the course of construction including, but not limited to, covering tops of walls with waterproof sheeting and covering partially completed structures when work is not in progress.

1.9 SUBSTITUTIONS AND CHANGES

A. No substitutions, revisions, or any other modifications to the Contract Documents, proposed by the Contractor, shall be made unless the following conditions are met:

1. All substitutions, revisions, or any other modifications are clearly identified as such on the shop drawings via a “cloud” or “box.” Each area so identified must be specifically approved by the Architect/Engineer in writing.
2. There is a substantial cost or schedule advantage to the Owner; or that the proposed revision is necessary to obtain the required materials or methods at the proper times to accomplish the work. In no case shall any revision proposed by the Contractor result in additional cost to the Owner.

B. Cost of Changes

1. The Contractor shall notify the Architect/Engineer in writing if a substitution or change will result in a cost increase to the project within five (5) working days of the date the change is proposed or initiated, regardless of who proposed or initiated the change. The Contractor shall submit to the Architect/Engineer in writing the cost of the substitution or change no later than fifteen (15) working days after the change is proposed or initiated.
2. The Contractor shall not be compensated for any change orders for a substitution or change, regardless of who proposed or initiated the change, where the Architect/Engineer are not notified of the cost of the change in accordance with the above.

3. The Architect/Engineer reserves the right to modify or cancel the substitution or change after their review of the cost information provided by the Contractor.

C. Value Engineering

1. Substitutions, revisions, or any other modifications to the Contract Documents for the purposes of reducing the cost of construction shall be made when requested by The Owner.
2. All such revisions shall include the cost of any re-design that is required of the Architect/Engineer.

1.10 HOT WEATHER CONSTRUCTION

A. Preparation - Prior to conducting masonry work

1. When the ambient air temperature exceeds 100° F, or exceeds 90° F with a wind velocity greater than 8 mph:

a. Maintain sand piles in a damp, loose condition.
b. Provide necessary conditions and equipment to produce mortar having a temperature below 120° F.

2. When the ambient air temperature exceeds 115° F, or exceeds 105° F with a wind velocity greater than 8 mph, shade materials and mixing equipment from direct sunlight in addition to the above requirements.

B. Construction - While masonry work is in progress:

1. If the wind velocity is greater than 8 mph:

a. Maintain temperature of mortar and grout below 120° F
b. Flush mixer, mortar transport container, and mortar boards with cool water before they come into contact with mortar ingredients or mortar.
c. Maintain mortar consistency by re-tempering with cool water

2. Use cool mixing water for mortar and grout when the ambient temperature exceeds 115° F, or exceeds 105° F with a wind velocity greater than 8 mph, in addition to the above requirements. Ice is permitted in the mixing water prior to use. Do not permit ice in the mixing water when added to the other mortar or grout materials.

C. Protection - When the mean daily temperature exceeds 100° F or exceeds 90° F with a wind velocity greater than 8 mph, fog spray newly constructed masonry until damp, at least three times a day until the masonry is three days old.

1.11 COLD WEATHER CONSTRUCTION

A. Implement cold weather procedures and comply with this section when the ambient air temperature is below 40° F.

B. Preparation - Prior to conducting masonry work

1. Do not lay masonry units having either a temperature below 20° F or containing frozen moisture, visible ice, or snow on their surface.
2. Remove visible ice and snow from the top surface of existing foundations and masonry to review new construction. Heat these surfaces above freezing, using methods that do not result in damage.

C. Construction – Implement the following for masonry work is in progress when the ambient temperature is within the following ranges:

1. 40° F to 32° F - Heat sand or mixing water to produce mortar temperature between 40° F and 120° F at the time of mixing. Grout does not require heated materials, unless the temperature of the materials is below 32° F.
2. 32° F to 25° F - Heat sand and mixing water to produce mortar temperature between 40° F and 120° F at the time of mixing. Maintain mortar temperature above freezing until used in masonry. Heat grout aggregates and mixing water to produce grout temperature between 70° F and 120° F at the time of mixing. Maintain grout temperature above 70° F at the time of grout placement.
3. 25° F to 20° F – In addition to (2) above, heat masonry surfaces under construction to 40° F and use wind breaks or enclosures when the wind velocity exceeds 15 mph. Heat masonry to a minimum of 40° F prior to grouting.
4. 20° F and below - In addition to (3) above, provide an enclosed and auxiliary heat to maintain air temperature above 32° F within the enclosure.
5. Do not heat water or aggregates used in mortar or grout to above 140° F.

D. Protection – Implement the following for completed masonry work when the ambient temperature is within the following ranges:

1. 40° F to 25° F - Protect newly constructed masonry by covering with a weather-resistive membrane for 24 hours after being completed.
2. 25° F to 20° F - Cover newly constructed masonry completed with weather-resistive insulating blankets, or equal protection, for 24 hours after completion of work. Extend time period to 48 hours for grouted masonry, unless the only cement in the grout is Type III Portland cement.
3. 20° F and below - Maintain newly construction masonry temperature above 32° F for at least 24 hours after being completed by using heated enclosures, electric heating blankets, infrared lamps, or other acceptable methods. Extend time period to 48 hours for grouted masonry, unless the only cement in the grout is Type III Portland cement.

1.12 WATERPROOFING

A. Provide water repellant admixtures in the concrete block and mortar mixes for all masonry that is installed in an exposed condition.

B. All masonry in severe exposures shall be protected using one of the externally applied methods listed below. Note that these are general guidelines only and any surface

applied treatments must be reviewed and approved by the Architect, and coordinated by the Contractor with any other external surfaces such as stucco or paint.

1. Heavy-duty waterproof cementitious coating (ex.: Eucoseal by Euclid Chemical Co.)
2. Fiber reinforced elastomeric emulsion (ex.: Superwall Pro by Euclid Chemical Co.)
3. Siloxane-based penetrating sealer (ex.: Weathergard by Euclid Chemical Co.)
4. Elastomeric waterproof acrylic paints or polyamide epoxy paints

PART 2 - PRODUCTS

2.1 CONCRETE MASONRY UNITS

A. Provide concrete masonry units that conform to ASTM C90 with a minimum compressive strength of 1,900 psi based on the net area of the unit.

B. Where high strength block (HSB) is specified, provide concrete masonry units that conform to ASTM C90 with a minimum compressive strength of 2,800 psi based on the net area of the unit.

C. Each masonry unit shall have dimensions that meet or exceed the following criteria:

1. 6” CMU: 1” face shells; net area of the unit = 32.4 in^2/ft.
2. 8” CMU: 1-1/4” face shells; net area of the unit = 42.0 in^2/ft.
3. 10” CMU: 1-3/8” face shells; net area of the unit = 50.4 in^2/ft.
4. 12” CMU: 1-1/2” face shells; net area of the unit = 60.0 in^2/ft.

D. Fire-Rating of Concrete Masonry Units - Refer to the architectural documents for all Underwriter’s Laboratory (UL) assemblies and fire-rating requirements. The Contractor and block producer shall supply block that meets or exceeds the fire-rating requirements, as set forth in the architectural documents, by either of the following:

a. UL Reference – Provide fire-rated masonry units that are marked with the “UL” logo signifying that they comply with the UL assembly cited as the basis of design; or,
b. Calculated Method – Provide masonry units of a material and equivalent thickness that meets the required fire-rating. Note that the criterion listed above are <u>minimum</u> dimensions and that units with thicker face shells and webs may be required in order to meet the specified fire-rating. For example, a 3-hour bare 8” CMU wall using limestone aggregate must have an equivalent thickness of 5.0” (standard 8” limestone CMU has an equivalent thickness of approximately 3.5”).

E. The color and finish of the units shall be as specified by the Architect.

2.2 MORTAR MATERIALS

A. Provide a masonry mortar that conforms to ASTM C270 with a minimum compressive strength of 2,500 psi. The masonry mortar shall be a mixture of sand, water, and masonry cement or mortar cement.

B. Masonry cements shall conform to ASTM C91 and shall have a minimum flexure bond strength of 100 psi at 28 days, a minimum compressive strength of 2,900 psi at 28 days, and a maximum air content of 19%.

C. Mortar cements shall conform to ASTM C1329 and shall have a minimum flexure bond strength of 115 psi at 28 days, a minimum compressive strength of 2,900 psi at 28 days, and a maximum air content of 15%.

D. The color of the masonry mortar shall be as specified by the Architect.

2.3 GROUT MATERIALS

A. Provide coarse aggregate grout that conforms to the requirements of ASTM C476 with a minimum compressive strength of 3,000 psi at 28 days. Do not use the same mix design used for concrete tie beams or tie columns.

B. The grout aggregate shall conform to the requirements of ASTM C404 with a maximum size of 3/8”.

C. The slump shall be between 8 and 11 inches.

D. Do not use admixtures unless accepted in writing by the Structural Engineer.

2.4 DEFORMED BAR REINFORCEMENT

A. Provide deformed reinforcing bars that conform to ASTM A615 (Grade 60). Grade 40 or Grade 50 bars are prohibited. The sizes and types of the reinforcement are specified in the Contract Documents.

B. The maximum bar size for vertical reinforcement shall be a No. 8 bar for 8” masonry and a No. 9 bar for 10” or thicker masonry. The minimum bar size shall be as follows:

1. No. 4 bars for vertical reinforcement
2. No. 3 bars for stirrups
3. No. 2 bars for ties

C. All reinforcing steel required to be welded shall conform to ASTM A706.

2.5 JOINT REINFORCEMENT AND METAL ACCESSORIES

A. Joint reinforcement

1. Joint reinforcement shall be ladder-type with minimum 9 gage side rails fabricated in accordance with ASTM A951. The wire shall be high-strength, cold-drawn wire with a minimum yield strength of 70,000 psi. The maximum spacing of cross wires shall be 16".
2. Plain reinforcing wire shall conform to ASTM A82 and deformed reinforcing wire shall conform to ASTM A496.
3. All joint reinforcement shall be hot-dipped galvanized and comply with ASTM A153.

B. Provide anchors, ties and accessories that conform to the following specifications:

1.	Plate and bent-bar anchors	ASTM A36
2.	Sheet-metal anchors and ties	ASTM A1008
3.	Wire mesh ties	ASTM A185
4.	Wire ties and anchors	ASTM A82
5.	Anchor bolts	ASTM A307, Grade A

6. All embedded accessories shall be hot-dipped galvanized and comply with ASTM A123 (Class B) or ASTM A153 (Class B) as applicable.

2.6 PRECAST LINTELS

A. Provide U-shaped precast concrete lintels with a minimum compressive strength of 3,500 psi or 6,000 psi for prestressed lintels.

B. Lintel reinforcement

1. Prestressing strand shall be manufactured in accordance with ASTM A416 (Grade 270 ksi), low relaxation.
2. Mild reinforcement shall conform to ASTM A615 (Grade 60).
3. Stirrups shall be a minimum 7/32" wire conforming to ASTM A510.

C. All precast lintels shall be sized and engineered by the lintel manufacturer. Each lintel shall be designed so that it can support the wall load unshored until any grout has reached 75% of its specified compressive strength.

2.7 ACCESSORIES

A. Provide contraction (shrinkage) joint material that conforms to one of the following standards:

1. ASTM D2000, M2AA-805 Rubber shear keys with a minimum durometer hardness of 80.
2. ASTM D2287, Type PVC 654-4 PVC shear keys with a minimum durometer hardness of 85.
3. ASTM C920.

B. Provide expansion joint material that conforms to one of the following standards:

1. ASTM C920.

2. ASTM D994.
3. ASTM D1056, Class 2A1

C. Provide asphalt emulsion in areas that require such for waterproofing, as specified by the Architect, in accordance with the following:

1. ASTM D1187, Type II at metal surfaces
2. ASTM D1227, Type III, Class 1 at porous surfaces

D. Masonry cleaner

1. Use potable water and detergents to clean masonry unless otherwise acceptable.
2. Unless otherwise required, do not use acid or caustic solutions.

E. Joint Fillers - Use the size and shape of the joint fillers specified in the Contract Documents.

PART 3 - EXECUTION

3.1 MORTAR MIXING

A. Mix cementitious materials and aggregates between 3 and 5 min. in a mechanical batch mixer with a sufficient amount of water to produce a workable consistency. Do not hand mix mortar. Maintain workability of mortar by remixing or re-tempering. Discard mortar which has begun to stiffen or is not used within 2½ hr. after initial mixing.

B. Limit the maximum percentage of mineral oxide or carbon black job-site pigments by weight of cement as follows: mineral oxide pigment not to exceed 5 percent, and carbon black pigment not to exceed 1 percent.

C. Do not use admixtures containing more than 0.2 percent chloride ions.

3.2 REINFORCEMENT FABRICATION

A. Fabricate bars used in masonry reinforcement in accordance with the fabricating tolerance of ACI 315. Bend bars cold and do not heat bars.

B. Bend Diameters

1. The minimum inside diameter of bend for stirrups and ties shall be five bar diameters.
2. The minimum inside bend diameter is as follows:

a. No. 3 through No. 8 = 6 bar diameters
b. No. 9 = 8 bar diameters

C. Provide standard hooks that conform to the following:

1. The embedment length of a standard hook shall be not less than the following:

   a. For hooks embedded in grouted masonry - 13 times the bar diameter (in.) rounded up to the nearest even inch.
   b. For hooks embedded in reinforced concrete members - 19 times the bar diameter (in.) rounded up to the nearest even inch.

2. A standard 180-degree hook shall have a 180 degree bend plus a minimum extension of 4 bar diameters or 2 ½ in (64mm), whichever is greater.
3. A standard 90-degree hook shall have a 135-degree bend plus a minimum extension of 6 bar diameters or 4 in. (102 mm), whichever is greater.
4. A standard 90-degree hook shall have a 90-degree bend plus a minimum extension of 12 bar diameters.
5. Stirrups and ties shall have a 90-or 135-degree bend plus a minimum of 6 bar diameters or 2-½ in, (64mm), whichever is greater.

D. Development and Lap Lengths – shall be fabricated in accordance with Table 3.2D-1. Development and splice lengths for vertical and horizontal reinforcement in walls and piers requires that the bar is centered in the wall. Lengths for vertical reinforcement in columns and pilasters requires a minimum of 2” cover from outside face of masonry to bar, and a minimum 2” clear spacing between adjacent splices.

Bar Size	8” Wall	10” Wall	12” Wall	Columns Pilasters
3	12	12	12	16
4	16	12	12	16
5	24	18	16	24
6	43	34	28	44
7	60	46	38	60
8	92	71	57	92
9	n/a	91	74	118

Table 3.2D-1: Development and Lap Splice Lengths (in.)

3.3 PREPARATION

A. Prior to the start of masonry construction, the Contractor shall verify that the foundations are constructed within tolerances conforming to the requirements of ACI 117, and that the reinforcing dowels are positioned in accordance with the Contract Documents.

B. Clean reinforcement by removing mud, oil, or other materials that will adversely affect or reduce bond at the time mortar or grout is placed. Reinforcement with rust, mill scale, or a combination of both are acceptable without cleaning or brushing provided

the dimensions and weights, including heights of deformations, of a cleaned sample are not less than required by the ASTM specification covering this reinforcement in this Specification.

C. Prior to placing masonry, remove laitance, loose aggregate, and anything else that would prevent mortar from bonding to the foundation.

D. Do not wet concrete masonry units before laying. Wet cutting is permitted.

E. Remove Debris - Construct grout spaces free of mortar dropping, debris, loose aggregates, and any material deleterious to masonry grout.

F. Place reinforcement and ties in grout spaces prior to grouting.

3.4 MASONRY ERECTION

A. Layout

1. The General Contractor is responsible for the layout of the masonry walls and is responsible for producing a layout drawing for field use. The General Contractor shall, at his option, either produce the layout drawing using his own Field Engineer, or hire a third party at his own expense to produce the layout.
2. The masonry rough openings shall be determined by the General Contractor based on the actual windows and doors that are used for the project. Refer to the window and door manufacturers' installation instructions for required rough opening dimensions.

B. Lay all masonry in a running bond pattern unless specifically stated otherwise in the Structural Drawings. Bond and interlock each course at corners and intersections. Use special shaped units where shown, and as required for corners, jambs, sash, control joints, lintels, bond beams and other special conditions.

C. Maintain vertical continuity of core or cell cavities which are to be reinforced and grouted to provide minimum clear dimensions indicated and to provide minimum clearance and grout coverage for vertical reinforcing bars. Keep cavities free of mortar. Solidly bed webs in mortar where adjacent to reinforced cores or cells.

D. Placing mortar and concrete masonry units

1. Bed and head joints - Construct 3/8" thick bed and head joints, except at foundations. Construct bed joint of the starting course of foundation with a thickness not less than ¼" and not more than ¾" for ungrouted or partially grouted masonry and 1-1/4" for masonry grouted solid. Construct joints that also conform to the following:

   a. Fill holes not specified in exposed and below grade masonry with mortar.
   b. Unless otherwise required, tool joint with a round jointer when the mortar is thumbprint hard.

c. Remove masonry protrusions extending ½" or more into cells or cavities to be grouted.

2. Solidly fill collar joints less than ¾" wide with mortar as the job progresses.
3. Hollow units

   a. Face shells of bed joints shall be fully mortared.
   b. Webs are fully mortared in all courses of piers, columns and pilasters; in the starting course on foundations; and when otherwise necessary to confine grout or insulation.
   c. Head joints are mortared, a minimum distance from each face equal to the face shell thickness of the unit.
   d. Vertical cells to be grouted are aligned and unobstructed openings for grout are provided in accordance with the Contract Documents.

4. Solid units

   a. Construct head joints by shoving mortar tight against the adjoining unit. Do not fill head joints by slushing with mortar.
   b. Do not deeply furrow bed joints.

5. All units

   a. Place clean units while the mortar is soft and plastic. Remove and relay in fresh mortar any unit disturbed to the extent that initial bond is broken after initial positioning.
   b. Except for glass units, cut exposed edges or faces of masonry units smooth, or position so that exposed faces or edges are unaltered manufactured surfaces.
   c. Notify the Structural Engineer when the bearing of masonry wythe on its support is less than two-thirds of the wythe thickness.

E. Lintels

1. Provide precast lintels over all openings in excess of 1'-0" in width.
2. Lintels shall be either comprised of precast concrete, cast-in-place concrete or steel as shown in the Contract Documents. The Contractor shall use precast lintels in the event no lintel type is specifically shown in the Contract Documents.
3. Lintels shall have a minimum bearing of 4" at each end.
4. Lintels at elevator shaft openings:

   a. Single-car Shafts – Provide a 3-course precast composite lintel over elevator door openings spanning from shaft wall to shaft wall (out-to-out) regardless of the door opening shown in the drawings. Refer to the details for the lintel construction.
   b. Double-car Shafts – Provide a 24" deep cast-in-place concrete lintel over elevator door openings spanning from shaft wall to shaft wall (out-to-out) regardless of the door opening shown in the drawings. Refer to the details for the lintel construction.

5. Grout lintels with adjacent bond beams in one monolithic pour.

F. Bond beams and Tie beams

1. Provide a horizontal bond beam or cast-in-place tie beam at every floor and roof level as shown in the Contract Documents.
2. Use only polypropylene, screen-type grout stop when grouting horizontal bond beams. Lay screen continuously in mortar joints in accordance with manufacturer's specifications.
3. Unless shown otherwise in the Contract Documents, reinforce all bond beams with two (2) continuous No. 5 bars in each course.

G. Horizontal Penetrations

1. The penetration locations are NOT shown in the structural drawings. Refer to the drawings for mechanical, plumbing, electrical, fire protection and other disciplines for the locations and sizes of all penetrations.
2. Penetrations 4" diameter or larger

   a. Lintels are required over all horizontal penetrations through masonry walls that are 5" diameter or larger.
   b. The lintels shall be constructed of precast concrete units or steel members depending upon the size of the penetration rough opening and allowable depth for the lintel. The construction of the lintel will vary by location.
   c. Penetrations through lintels over wall openings is prohibited.

3. Penetrations less than 4" diameter – It is acceptable to core drill through masonry walls provided the following conditions are met:

   a. Do not core drill within 2" of any horizontal or vertical reinforcement
   b. Locate cores horizontally in the center of the block cell
   c. Locate cores vertically as near to the bed joint as possible

4. For all penetrations, provide a minimum of 2'-0" horizontally between the edge of the penetration opening and the nearest edge of the wall.
5. Provide a minimum of 2'-0" between the edge of the penetration opening and the nearest edge of any adjacent opening. Smaller cores that do not meet this spacing criteria shall be considered as one large penetration for lintel purposes.
6. It is the General Contractor's responsibility to coordinate the horizontal penetrations and lintel locations prior to the construction of the masonry walls. Do not saw-cut penetrations into the masonry walls after the walls are built.

3.5 CONTROL JOINTS

A. Control joints shall be provided in all concrete masonry construction. Control joints affect the visual appearance of the building elevations as well as the installation of surface materials such as stucco, and therefore the Contractor must coordinate all control joint locations with the joints and reveals of the exterior coatings.

B. At a minimum, place the control joints as follows:

1. At a distance not to exceed 20’-0” from joint to joint.
2. At a width to height ratio not to exceed 2:1.
3. At all changes in wall height and at all changes in wall thickness.
4. For purposes of calculating joint spacing, building corners shall be considered a “joint”.

C. Where masonry control joints are required, place them coincident with any stucco control joints. Do not place masonry control joints over openings.

D. Horizontal wall reinforcing shall be stopped each side of control joints.

E. Refer to the architectural drawings for all control joint locations. In the event that no joints are shown, the Contractor shall submit a proposed control joint layout to the Architect for his review.

F. Refer to the architectural drawings and/or specifications for sealant requirements at control joints.

3.6 REINFORCEMENT AND TIE INSTALLATION

A. Place reinforcement, wall ties, and anchors in accordance with the sizes, types, and locations indicated on the Contract Documents and as specified herein. Do not place dissimilar metals in contact with each other.

B. Reinforcement

1. Clean reinforcement of loose rust, mill scale, earth, ice or other materials that will reduce the bond to mortar or grout. Do not use reinforcement bars with kinks or bends not shown on drawings or final shop drawings, or bars with reduced cross-section due to excessive rusting or other causes.
2. Position reinforcement accurately at the spacing indicated. Support and secure vertical bars against displacement. Vertical bars shall be held in position at the top and bottom and at intervals not exceeding 8'-0". Maintain a clear distance between reinforcement bars and any face of a masonry unit or formed surfaces by not less than ½ inch, but not less than one bar diameter or 1" (whichever is greater) between adjacent bars.
3. For columns, piers and pilasters provide a clear distance between vertical bars as shown in the Contract Documents, but not less than 1.5 times the nominal bar diameter or 1-1/2", whichever is greater. Provide a minimum cover of 2” as measured from outside face of block to face of vertical bar. Provide lateral ties as shown in the Contract Documents.
4. All dowels shall be grouted into a cell even if the dowel is in an adjacent cell to the vertical steel. Unless detailed otherwise on the drawings, dowels shall be the same size and number as the vertical steel. Dowels for columns and pilasters shall be set using 1/8" thick steel plate templates. Templates shall be detailed and submitted with reinforcing steel shop drawings.

5. Terminate all vertical reinforcement into the highest bond beam or tie beam with a 90-degree ACI standard hook. The hook shall extend to the uppermost horizontal reinforcement of the beam and shall have a minimum embedment as specified in Section 3.2C.
6. All horizontal reinforcing steel shall be placed in continuous bond beam or lintel units and shall be solidly grouted in place. Center bars in bond beam or lintel and, excluding contact lap splices, maintain a minimum of one bar diameter or 1" (whichever is greater) clearance between adjacent bars. Horizontal reinforcement shall be placed as the masonry work progresses.
7. Terminate all horizontal reinforcement in bond beams and concrete tie beams at discontinuous ends into vertical grouted cells with a 90-degree ACI standard hook.
8. Provide matching 2'-0" x 2'-0" corner bars for all horizontal reinforcement.
9. At sills under openings, provide a single-course knock-out block grouted solid and reinforced with (2) #4 with hooks at each end.
10. Provide the following reinforcement in addition to the specified vertical wall reinforcement:

    a. One bar at each corner
    b. At each intersecting wall
    c. One bar at both sides of openings up to 10 feet wide, two bars at both sides of openings over 10 feet wide

11. Splice only where indicated on the Contract Documents. Where splices occur, adjacent splices shall be staggered so that no more than 25% of the total number of bars is spliced at any one point with a minimum stagger between splices in adjacent bars of at least the lap length. Provide lapped splices, unless otherwise indicated. In splicing vertical bars or attaching to dowels, lap ends, place in contact and wire tie.
12. Completely embed reinforcing bars in grout in accordance with Section 3.8.
13. Do not bend reinforcement after it is embedded in grout or mortar.
14. Place all steel in accordance with the tolerances specified in Part 3 of the Specification for Masonry Structures (ACI 530).
15. Joint Reinforcement

    a. Place the joint reinforcement in bed joints as follows:
        (1) Provide a minimum cover of 5/8 inch
        (2) In first course above the foundation
        (3) At every other course (16" o.c. maximum).
        (4) At each course in bond beams supporting floors or roofs
        (5) Within 16" of the top of walls
        (6) At the bottom and top of wall openings extending at least 24" past the opening on each side

    b. Lap longitudinal wires by either:
        (1) 6" minimum laps fully embedded in mortar; or,
        (2) Gently bend longitudinal wires so that they are embedded in a grouted cell a minimum of 6" past the straight wires of the adjacent lapping reinforcement.

c. Use only prefabricated corners and tees at intersecting walls.

C. Wall ties

1. Provide wall ties between masonry wythes in multi-wythe walls, where masonry is supported by other structural members (ex.: structural steel studs), and where masonry walls abut concrete columns or walls.
2. Embed the ends of wall ties in mortar joints. Embed wall tie ends at least ½ in. into the outer face shell of hollow units. Embed wire wall ties at least 1½ in, into the mortar bed of solid masonry units or solid grouted hollow units.
3. Bond wythes not bonded by headers with W1.7 wall ties at a minimum rate of one (1) per 2.67 ft^2, but with a maximum spacing between ties as 36 in. horizontally and 24 in. vertically.
4. Use dovetail-type ties where masonry walls abut concrete columns or walls.
5. Install ties in accordance with the following maximum spacing:

   a. One tie for each 1.77 ft^2 (16”x16”) of wall area.
   b. Do not exceed 16” horizontal or vertical spacing.
   c. The maximum misalignment of bed joints from one wythe to the other is 1-1 /4 in.
   d. The maximum clearance between connecting parts of the ties is 1/16 in.
   e. When pintle legs are used, provide ties with at least two legs made of wire size W2.8.

6. Do not bend wall ties after being embedded in grout or mortar.
7. Install wire ties perpendicular to vertical line on the face of the wythe from which they protrude. Where one-piece ties or joint reinforcement are used, the bed joints of adjacent wythes shall align.
8. Provide additional unit ties around openings larger than 16" in either dimension. Space ties around perimeter of opening at a maximum of 3 ft. on center. Place ties within 12 in. of opening.
9. Provide unit ties within 12 in of unsupported edges at horizontal or vertical spacing given above.

3.7 CLEAN-OUTS

A. Provide cleanouts in the bottom course of masonry for each grout pour when the grout pour height exceeds 5’-4”. Clean-outs are required for high-lift grouting; clean-outs are not required for low-lift grouting.

B. Construct clean-outs with an opening of sufficient size to permit removal of debris and allow visible inspection. The minimum opening dimensions shall be 3” x 3”.

C. For masonry that is grouted solid, space clean-outs horizontally at a maximum of 32” on center.

D. After cleaning and inspection, close clean-outs with closures braced to resist grout pressure.

3.8 GROUTING

A. Grout Placement

1. Construct masonry walls to the full height of the maximum grout pour prior to grouting.
2. Do not place grout until the entire height of masonry to be grouted has attained sufficient strength to resist the displacement of masonry units and breaking of mortar bond, and the masonry has cured for at least four (4) hours.
3. Grout shall be placed within 1.5 hours from introducing water in the mixture and prior to the initial set.
4. Grout Pour Height – the total grout pour height shall not exceed the lesser of the following:

    a. Story height or full-wall height
    b. Vertical distance between bond beams or tie beams.
    c. 24’-0” for cells of hollow units
    d. For the cavity between wythes in multi-wythe walls
        (1) 24’-0” height for 3” or greater cavities
        (2) 12’-8” height for 2-1/2” or greater cavities
        (3) 5’-4” height for 2” or greater cavities

    e. As limited by the local building authority (e.g., High-Velocity Hurricane Zones limit the pour height to 12’-8”)

5. Grout Lift Height – Place grout in lifts not to exceed 5’-4”.
6. Grout Keys

    a. Grout keys shall be provided between each grout pour and grout lift.
    b. A grout key is created by terminating the grout a minimum of 1-1/2” below a mortar joint.
    c. Do not form grout keys within beams.
    d. At beams or lintels laid with closed-bottom units, terminate the grout pour flush to the bottom of the unit without creating a grout key.

7. Prior to grouting, inspect and clean all grout spaces. Remove dust, dirt, mortar droppings, loose pieces of masonry and other foreign materials from grout spaces. Clean reinforcement and adjust to proper position. Clean top surface of structural members supporting masonry to ensure bond.
8. Install shores and bracing as required before starting grouting operations.
9. Install grout at the following locations:

    a. Where indicated in the structural plans, details and notes
    b. Grout solid all units that are below grade whether shown as grouted in the Structural Drawings or not.
    c. Provide a minimum of two (2) grouted cells under concentrated loads (bearing of beams, girder trusses, etc.).
    d. Grout all cells to which items will be attached using post-installed mechanical anchors. These items include, but are not limited to: stair landings, stringers

and handrails; ledger beams; clips and angles; window and door frames; elevator attachments; wood connectors; etc. These areas shall be grouted whether shown as grouted in the Structural Drawings or not.

e. Grout in lintels or beams over openings shall be placed in one continuous pour.

10. Confine grout to the areas where indicated above. Use metal lathe or screen embedded in mortar to confine grout to specified areas. Do not use sheet metal, felt or other materials that will prevent bond between masonry units and mortar.

B. Consolidation

1. Properly consolidate all grout at the time of placement.
2. Consolidate pours exceeding 12 in. in height by mechanical vibration, and reconsolidate by mechanical vibration after initial water loss and settlement has occurred.
3. Consolidate grout pours 12 in. or less in height by mechanical vibration or by puddling.

3.9 PIERS AND COLUMNS

A. Piers

1. Piers are defined as portions of walls in between openings (or between an opening and a building corner) with dimensions that meet the following criteria:

   a. Nominal thickness (t) does not exceed 16”
   b. Horizontal length (L) is greater than or comparable to 3t but less than 6t
   c. The clear height (H) is less than or comparable to 5L

2. Piers that support three or more levels above the pier shall be grouted solid from the top of the lintel to the floor line below.
3. Pier reinforcement shall extend from floor to floor in same manner as specified wall reinforcement. The spacing of the vertical pier reinforcement shall not exceed 16” o.c.

B. Columns

1. Columns are defined as isolated masonry assemblies that meet the following dimensional criteria:

   a. Nominal thickness (t) greater or equivalent to 8”
   b. Horizontal length (L) is less than 3t
   c. The clear height (H) is greater than or equivalent to 4t

2. All masonry columns must be reinforced as follows:

   a. A minimum of four (4) vertical bars not less than #4

b. Lateral ties shall not be less than #2 and shall not be spaced greater than the least dimension of the block (rounded down to the nearest inch)

3.10 EMBEDDED ITEMS AND ACCESSORIES

A. Construct chases as masonry units are laid.

B. Install pipes and conduits passing horizontally through nonbearing masonry partitions.

C. Place pipes and conduits passing horizontally through piers, pilasters, or columns.

D. Place horizontal pipes and conduits in and parallel to plane of walls.

E. Install and secure connectors, flashing, weep holes, weep vents, nailing blocks, and other accessories.

F. Install movement joints.

G. Do not embed aluminum conduits, pipes, and accessories in masonry, grout, or mortar, unless effectively coated or covered to prevent chemical reaction between aluminum and cement or electrolytic action between aluminum and steel.

3.11 SHORING AND BRACING

A. The masonry structure is designed for the final, in-place condition only. Temporary bracing and shoring required during the course of construction is the sole responsibility of the contractor.

B. Design, provide, and install bracing that will assure stability of masonry during construction.

3.12 SITE TOLERANCES

A. Erect all masonry in accordance with the tolerances specified in Part 3 of The Specification for Masonry Structures (TMS 602/ACI 530).

3.13 REPAIR, POINTING AND CLEANING

A. Remove and replace masonry units which are loose, chipped, broken, stained or otherwise damaged, or if units do not match adjoining units as intended. Provide new units to match the adjoining units and install them in fresh mortar or grout, pointed to eliminate evidence of replacement.

B. Pointing

1. During the tooling of joints, enlarge any voids or holes (except weep holes) and completely fill with mortar. Point-up all joints including corners, openings and adjacent work to provide a neat, uniform appearance, prepared for application of sealants. If the repairs must be made after the mortar has hardened, the joint

must be raked or chiseled out to a depth of no less than 1/2" thoroughly wetted, and re-pointed with fresh mortar.

2. To pre-hydrate mortars, thoroughly mix all ingredients except water in proportions used for the original mortar mix; then mix again, adding only enough water to produce a damp mix which will retain its form when pressed into a ball. After 1 to 2 hours, add sufficient water to bring it to the proper conventional consistency.

C. Final Cleaning

1. Clean masonry after mortar is thoroughly set and cured.
2. Remove large mortar particles by hand with wooden paddles and non-metallic scrape hoes or chisels.
3. Test cleaning methods on sample wall panel and leave half of the test panel un-cleaned for comparison purposes. Obtain Architect's approval of sample cleaning before proceeding with cleaning of masonry.
4. Protect adjacent stone and non-masonry surfaces from contact with cleaner by covering them with liquid strippable masking agent, polyethylene film or waterproof masking tape. All cleaners must be approved by the Architect prior to their use.
5. Saturate wall surfaces with water prior to application of cleaners. Remove cleaners promptly by rinsing thoroughly with clean water.

D. Protection and Cleanup

1. Provide final protection and maintain conditions in a manner acceptable to Installer, which ensure unit masonry work being without damage and deterioration at time of substantial completion.
2. Leave work area and surrounding surfaces clean and free of mortar spots, droppings, and broken masonry.

END OF SECTION 042010

SECTION 044313 - ADHERED CAST STONE MASONRY VENEER

PART 1 - GENERAL

1.1 SUMMARY

A. Section Includes:
   1. Cast stone masonry adhered to unit masonry backup.
   2. Cast stone masonry veneer adhered to metal framing and sheathing.

1.2 PREINSTALLATION MEETINGS

A. Preinstallation Conference: Conduct conference at Project site.

1.3 ACTION SUBMITTALS

A. Product Data: For each variety of stone, stone accessory, and manufactured product.

B. Samples:
   1. For each stone type indicated.
   2. For each color of mortar required.

1.4 INFORMATIONAL SUBMITTALS

A. Qualification Data: For Installer.

1.5 INFORMATIONAL SUBMITTALS

A. Qualification Data: For Installer.

1.6 DELIVERY, STORAGE, AND HANDLING

A. Store cementitious materials on elevated platforms, under cover, and in a dry location. Do not use cementitious materials that have become damp.

B. Store aggregates where grading and other required characteristics can be maintained and contamination avoided.

1.7 FIELD CONDITIONS

A. Protection of Stone Masonry: During construction, cover tops of walls, projections, and sills with waterproof sheeting at end of each day's work. Cover partially completed stone masonry when construction is not in progress.

B. Stain Prevention: Immediately remove mortar and soil to prevent them from staining stone masonry face.

C. Cold-Weather Requirements: Do not use frozen materials or materials mixed or coated with ice or frost. Do not build on frozen substrates. Comply with cold-weather construction requirements contained in ACI 530.1/ASCE 6/TMS 602.
   1. Cold-Weather Cleaning: Use liquid cleaning methods only when air temperature is 40 deg F and above and will remain so until masonry has dried.

D. Hot-Weather Requirements: Comply with hot-weather construction requirements contained in ACI 530.1/ASCE 6/TMS 602.

PART 2 - PRODUCTS

2.1 CAST STONE UNITS

A. Basis of Design Product: Cultured Stone; Sculped Ashlar.
   1. Color: Echo Ridge.

B. Conformance Standard: ASTM C1364.

C. Fabrication Tolerances: Comply with Cast Stone Institute.

2.2 MORTAR MATERIALS

A. Portland Cement: ASTM C150, Type I or Type II, except Type III may be used for cold-weather construction; natural color or white cement may be used as required to produce mortar color indicated.

B. Hydrated Lime: ASTM C207, Type S.

C. Mortar Pigments: Natural and synthetic iron oxides and chromium oxides, compounded for use in mortar mixes and complying with ASTM C979.
   1. Products: One of the following:
      a. Davis Colors; True Tone Mortar Colors.
      b. Solomon Colors; SGS Mortar Colors.

D. Aggregate: ASTM C144 and as follows:
   1. White Aggregates: Natural white sand or ground white stone.

E. Latex Additive: Manufacturer's standard acrylic-resin or styrene-butadiene-rubber water emulsion, serving as replacement for part or all of gaging water, of type specifically recommended by latex-additive manufacturer for use with field-mixed portland cement mortar bed, and not containing a retarder.
   1. Manufacturers: One of the following:
      a. Custom Building Products.
      b. Laticrete International, Inc.

c. MAPEI Corporation.

F. Water: Potable.

2.3 MISCELLANEOUS MASONRY ACCESSORIES

A. Compressible Filler: Premolded filler strips complying with ASTM D 1056, Grade 2A1; compressible up to 35 percent; of width and thickness indicated; formulated from neoprene.

B. Expanded Metal Lath: 3.4 lb/sq. yd., self-furring, diamond-mesh lath complying with ASTM C 847. Fabricate from structural-quality, zinc-coated (galvanized) steel sheet complying with ASTM A 653/A 653M, G60.

C. Lath Attachment Devices: Material and type required by ASTM C 1063 for installations indicated.

2.4 MORTAR MIXES

A. General: Do not use admixtures unless otherwise indicated.
   1. Do not use calcium chloride.
   2. Use portland cement-lime mortar.

B. Mortar: Comply with ASTM C270, Type N Proportion Specification.

C. Latex-Modified Portland Cement Setting Mortar: Proportion and mix portland cement, aggregate, and latex additive to comply with latex-additive manufacturer's written instructions.

D. Cement-Paste Bond Coat: Mix either neat cement and water or cement, sand, and water to a consistency similar to that of thick cream.
   1. For latex-modified, portland cement, setting-bed mortar, substitute latex admixture for part or all of water, according to latex-additive manufacturer's written instructions.

E. Mortar for Scratch Coat over Metal Lath: 1 part portland cement, 1/2 part lime, 5 parts loose damp sand, and enough water to produce a workable consistency.

PART 3 - EXECUTION

3.1 EXAMINATION

A. Examine surfaces indicated to receive stone masonry, with Installer present, for compliance with requirements for installation tolerances and other conditions affecting performance of stone masonry.

B. Proceed with installation only after unsatisfactory conditions have been corrected.

3.2 PREPARATION

A. Clean dirty or stained stone surfaces by removing soil, stains, and foreign materials before setting. Clean stone by thoroughly scrubbing with fiber brushes and then drenching with clear water. Use only mild cleaning compounds that contain no caustic or harsh materials or abrasives.

3.3 CONSTRUCTION TOLERANCES

A. Measure variation from level, plumb, and position shown in plan as a variation of the average plane of each stone face from level, plumb, or dimensioned plane.

B. Variation in Mortar-Joint Thickness: Do not vary from joint size range indicated.

C. Variation in Plane between Adjacent Stones: Do not exceed one-half of tolerance specified for thickness of stone.

3.4 SETTING OF CAST STONE MASONRY IN MORTAR

A. Install scratch coat over metal lath 3/8 inch thick to comply with ASTM C 926.

B. Set cast stone as indicated on Drawings. Set units accurately in locations indicated with edges and faces aligned according to established relationships and indicated tolerances.

C. Wet joint surfaces thoroughly before applying mortar or setting in mortar.

D. Set units in full bed of mortar with full head joints.
   1. Set units with joints 3/8 inch to 1/2 inch wide unless otherwise indicated.

E. Rake out joints for pointing with mortar to depths of not less than 3/4 inch. Rake joints to uniform depths with square bottoms and clean sides. Scrub faces of units to remove excess mortar as joints are raked.

F. Point mortar joints by placing and compacting mortar in layers not greater than 3/8 inch. Compact each layer thoroughly and allow it to become thumbprint hard before applying next layer.

G. Tool exposed joints slightly concave when thumbprint hard, using a jointer larger than joint thickness unless otherwise indicated.

3.5 ADJUSTING AND CLEANING

A. In-Progress Cleaning: Clean cast stone masonry as work progresses. Remove mortar fins and smears before tooling joints.

B. Final Cleaning: After mortar is thoroughly set and cured, clean cast stone masonry as follows:
   1. Remove large mortar particles by hand with wooden paddles and nonmetallic scrape hoes or chisels.
   2. Clean cast stone masonry by bucket and brush hand-cleaning method described in BIA Technical Note No. 20, using job-mixed detergent solution.

END OF SECTION 044313

SECTION 061053 - MISCELLANEOUS ROUGH CARPENTRY

PART 1 - GENERAL

1.1 SUMMARY

A. Section Includes:
1. Wood blocking and nailers.
2. Wood furring and grounds.

1.2 ACTION SUBMITTALS

A. Product Data: For each type of process and factory-fabricated product. Indicate component materials and dimensions and include construction and application details.

1. Include data for wood-preservative treatment from chemical treatment manufacturer and certification by treating plant that treated materials comply with requirements. Indicate type of preservative used and net amount of preservative retained.
2. Include data for fire-retardant treatment from chemical treatment manufacturer and certification by treating plant that treated materials comply with requirements. Include physical properties of treated materials based on testing by a qualified independent testing agency.
3. For fire-retardant treatments, include physical properties of treated lumber both before and after exposure to elevated temperatures, based on testing by a qualified independent testing agency according to ASTM D 5664.
4. For products receiving a waterborne treatment, include statement that moisture content of treated materials was reduced to levels specified before shipment to Project site.
5. Include copies of warranties from chemical treatment manufacturers for each type of treatment.

1.3 INFORMATIONAL SUBMITTALS

A. Evaluation Reports: For the following, from ICC-ES:
1. Preservative-treated wood.
2. Fire-retardant-treated wood.
3. Power-driven fasteners.

1.4 QUALITY ASSURANCE

A. Testing Agency Qualifications: For testing agency providing classification marking for fire-retardant treated material, an inspection agency acceptable to authorities having jurisdiction that periodically performs inspections to verify that the material bearing the classification marking is representative of the material tested.

1.5 DELIVERY, STORAGE, AND HANDLING

A. Stack lumber flat with spacers beneath and between each bundle to provide air circulation. Protect lumber from weather by covering with waterproof sheeting, securely anchored. Provide for air circulation around stacks and under coverings.

PART 2 - PRODUCTS

2.1 WOOD PRODUCTS, GENERAL

A. Lumber: DOC PS 20 and applicable rules of grading agencies indicated. If no grading agency is indicated, provide lumber that complies with the applicable rules of any rules-writing agency certified by the ALSC Board of Review. Provide lumber graded by an agency certified by the ALSC Board of Review to inspect and grade lumber under the rules indicated.
   1. Factory mark each piece of lumber with grade stamp of grading agency.
   2. Provide dressed lumber, S4S.

B. Maximum Moisture Content of Lumber: 19 percent.

2.2 WOOD-PRESERVATIVE-TREATED MATERIALS

A. Preservative Treatment by Pressure Process: AWPA U1; Use Category UC2 for interior construction not in contact with the ground, Use Category UC3b for exterior construction not in contact with the ground, and Use Category UC4a for items in contact with the ground.
   1. Preservative Chemicals: Acceptable to authorities having jurisdiction and containing no arsenic or chromium.

B. Kiln-dry lumber after treatment to a maximum moisture content of 19 percent. Do not use material that is warped or does not comply with requirements for untreated material.

C. Mark lumber with treatment quality mark of an inspection agency approved by the ALSC Board of Review.

D. Application: Treat items indicated on Drawings.

2.3 FIRE-RETARDANT-TREATED MATERIALS

A. Fire-Retardant-Treated Lumber by Pressure Process: Products with a flame spread index of 25 or less when tested according to ASTM E84, and with no evidence of significant progressive combustion when the test is extended an additional 20 minutes, and with the flame front not extending more than 10.5 feet beyond the centerline of the burners at any time during the test.

1. Exterior Type: Treated materials shall comply with requirements specified above for fire-retardant-treated lumber by pressure process after being subjected to accelerated weathering according to ASTM D2898. Use for exterior locations and where indicated.
2. Design Value Adjustment Factors: Treated lumber shall be tested according ASTM D5664, and design value adjustment factors shall be calculated according to ASTM D6841. For enclosed roof framing, framing in attic spaces, and where high temperature fire-retardant treatment is indicated, provide material with adjustment factors of not less than 0.85 modulus of elasticity and 0.75 for extreme fiber in bending for Project's climatological zone.

B. Kiln-dry lumber after treatment to a maximum moisture content of 19 percent.

C. Identify fire-retardant-treated wood with appropriate classification marking of testing and inspecting agency acceptable to authorities having jurisdiction.

D. Application: Treat items indicated on Drawings.

2.4 MISCELLANEOUS LUMBER

A. General: Provide miscellaneous lumber indicated and lumber for support or attachment of other construction, including the following:
1. Blocking.
2. Nailers.
3. Furring.
4. Grounds.

B. For items of dimension lumber size, provide Construction or No. 2 grade lumber of any species.

C. For blocking and nailers used for attachment of other construction, select and cut lumber to eliminate knots and other defects that will interfere with attachment of other work.

2.5 FASTENERS

A. General: Provide fasteners of size and type indicated that comply with requirements specified in this article for material and manufacture.
1. Where carpentry is exposed to weather, in ground contact, pressure-preservative treated, or in area of high relative humidity, provide fasteners with hot-dip zinc coating complying with ASTM A153/A153M.

B. Power-Driven Fasteners: NES NER-272.

C. Wood Screws: ASME B18.6.1.

PART 3 - EXECUTION

3.1 INSTALLATION, GENERAL

A. Set carpentry to required levels and lines, with members plumb, true to line, cut, and fitted. Fit carpentry to other construction; scribe and cope as needed for accurate fit.

B. Where wood-preservative-treated lumber is installed adjacent to metal decking, install continuous flexible flashing separator between wood and metal decking.

C. Framing Standard: Comply with AF&PA's WCD 1, "Details for Conventional Wood Frame Construction".

D. Provide blocking and framing as indicated and as required to support facing materials, fixtures, specialty items, and trim.

E. Sort and select lumber so that natural characteristics will not interfere with installation or with fastening other materials to lumber. Do not use materials with defects that interfere with function of member or pieces that are too small to use with minimum number of joints or optimum joint arrangement.

F. Comply with AWPA M4 for applying field treatment to cut surfaces of preservative-treated lumber.

G. Securely attach carpentry work to substrate by anchoring and fastening as indicated, complying with the following:
   1. NES NER-272 for power-driven fasteners.
   2. Table 2304.9.1, "Fastening Schedule," in Florida Building Code.
   3. Section R602, "Wood Wall Framing," in Florida Building Code, Residential"

END OF SECTION 061053

SECTION 061600 – WOOD STRUCTURAL PANELS

PART 1 - GENERAL

1.1 DESCRIPTION OF WORK

A. This Reference Specification covers the materials, fabrication, placement, and tolerances of wood structural panels. P. It includes structural wood panels such as plywood and oriented-strand board used as sheathing in wood roofs, floors (a/k/a sub-flooring) and shear walls. Provisions of this Specification shall govern except where other provisions are specified in the Contract Documents.

B. Extent of the sheathing work is shown in the Contract Documents. Furnish all labor, materials, services, equipment and hardware required in conjunction with or related to the detailing, fabricating, delivery and placing of the sheathing work.

C. Wood underlayments, wood backing panels, composite nail base insulated roof sheathing, rough carpentry and timber are specified in other Division 6 sections. Panels used as wall sheathing, but not as shearwalls, are not included in this section—refer to the architectural specifications.

1.2 DEFINITIONS

A. Contract Documents - The Structural AND Architectural drawings, and the drawings of the other design disciplines. The Contract Documents shall include all schedules, notes and details. Contract Documents may be amended or clarified during the course of construction via Bulletins, Requests for Information (RFI), supplemental sketches, etc. issued by the Design Team. The Contract Documents are not assembly instructions nor are they layout drawings.

B. Exposed Condition – any area of the structure that is permanently exposed to the outside air including, but not limited to, parking garages, balconies, exterior corridors, etc.

C. Severe Exposure – any area of the structure that is within 1,000 feet of the high water mark of adjacent sea water; or where the panel is in continual contact with moisture or water.

1.3 REFERENCE STANDARDS

A. The following Standards (most recent editions) are referred to in this specification:

1. "Engineered Wood Construction Guide", as published by the American Plywood Association (APA).
2. "Diaphragms and Shearwalls (Form L350)", as published by the American Plywood Association (APA).
3. “Performance Standards and Policies for Structural-Use Panels. PRP-108”, as published by the American Plywood Association (APA).

4. "Standard PS2: Performance Standard for Wood-Based Structural-Use Panels", as published by the U.S. Department of Commerce
5. "Adhesives for Field-Gluing Plywood to Wood Framing (AFG-01)", as published by the American Plywood Association (APA).
6. ASTM D3498 "Standard Specification for Adhesives for Field-Gluing Plywood to Lumber Framing for Floor Systems"

1.4 SUBMITTALS

A. Submittals required in this Reference Specification shall be submitted for review. Submit the following data and drawings for review prior to any fabrication, execution or erection:

1. Submit the following mandatory data – no mandatory data is required.
2. Submit the following data when requested by the Engineer:

   a. Proof of trademark for panels
   b. Proof of nail pattern installed
   c. Unit cost data

B. Submittals shall be provided in electronic format (PDF) only, and review comments to the submittals shall be returned in the same format.

C. Submittals shall be provided in accordance with the following schedule:

1. The Contractor shall incorporate into his schedule and allow for a minimum of ten (10) working days per each item submitted for the Engineer's review of the submittal.
2. It is the Contractor's responsibility for assuring that submittals are provided in a timely manner such that the overall project schedule is not adversely impacted.
3. Multiple items submitted at one time shall be considered as individual submittals, and the 10-day review period shall be cumulative per individual submittal.
4. Any submittals received after 2:00 pm shall be considered to have been received the next business day. Electronic submittals shall be deemed as received when opened by the reviewer and not when sent by the submitter or received by the reviewer's server.

D. Submittals shall be reviewed in the following manner:

1. Submittals and shop Drawings are NOT part of the Contract Documents and only represent the submitter's interpretation of the Contract Documents. All submittals are of the Contractor, by the Contractor and for the Contractor's own use in his work plan, and for demonstrating his proposed construction means, methods, techniques, sequences and procedures to carry out requirements of the actual Contract Documents.
2. The Contractor is solely responsible for reviewing, verifying and approving the submittal(s), and the coordination of the Work between the various construction trades. It is the Contractor's responsibility to verify dimensions and elevations; order quantities; give assembly or fabrication instructions, and produce layout drawings for field use.

3. It is the Contractor's responsibility to coordinate his subcontractors' submittals. Any redlines or comments made to one submittal shall be transferred and applied by the Contractor to the submittal(s) of the other affected subcontractor(s).
4. The Contractor shall mark each submittal as "Approved" prior to forwarding them to the Architect/Engineer. Submittals that are not approved by the Contractor first will not be reviewed by the Architect/Engineer.
5. In no way shall changes initiated by the submitter and included in the submittal(s) supersede or revise the Contract Documents.
6. Any subsequent review of the submittal(s) by the Engineer shall in no way relieve the Contractor of his own responsibility to review and approval the submittal(s), to identify and correct deviations from the Contract Documents, or in any way protect the Contractor.
7. Review of the submittals by the Engineer is only for the conceptual compliance with the design intent and general compliance with the Contract Documents. Those items to be reviewed by the Engineer are solely at the discretion of the Engineer, and not all items will be reviewed by the Engineer.
8. Review comments (a/k/a "redlines") provided by the Architect/Engineer shall apply to all subsequent pages and all subsequent sets of the submittal regardless of whether each page is redlined or not. Redlines shall be considered cumulative from page to page and submittal to submittal. The Architect/Engineer is not required to review, annotate or stamp every sheet.
9. It is the Contractor's responsibility to ensure that electronic redlines are properly distributed to the subcontractor(s) and that said comments remain affixed to the electronic submittal (warning: electronic comments may not print on hard copies depending upon the software used by the person printing the reviewed submittal).
10. Revisions to shop drawings and calculations may be required in response to redlines provided by the Architect/Engineer. Such revisions are a normal part of the submittal review process and are to be expected. All costs associated with revising and re-submitting any shop drawing and/or calculations shall be borne solely by the Contractor and his subcontractors. Revising the field-use drawings to accommodate any redlines shall be the responsibility of the Contractor.
11. Any structural members for which mandatory shop drawings have not been reviewed and approved by the Contractor, and reviewed by the Engineer, but are fabricated, erected, or installed are done so at the Contractor's risk.
12. The Engineer/Architect is not required to download or upload submittals using any specific tracking software mandated by the Contractor.
13. The Engineer shall not sign and seal any submittal.

1.5 REQUESTS FOR INFORMATION (RFI)

A. The Contractor may submit a Request for Information ("RFI") on an as-needed basis. The purpose of the RFI is for the Contractor to obtain clarifications or request additional information from the Design Team, or to propose an alternate solution such that the construction of the Work may proceed in an efficient manner.

B. RFI's shall be submitted in writing in electronic format (PDF) only, and responses to the RFI's shall be returned in the same format.

C. Each RFI shall contain the following minimum information:

1. A specific question for which an answer is requested.
2. The name of the company and person submitting the RFI
3. Additional cost associated with the RFI
4. Explanatory sketches or photos (highly recommended)
5. A proposed solution, if any

D. RFI's shall be submitted and processed in the following manner:

1. All RFI's shall be submitted directly to the Architect, who in turn will forward it to the Engineer. A copy may be sent directly to the Engineer, at the Contractor's option and if authorized by the Architect, but the official copy (the copy that is tracked) shall be the one submitted to the Architect.
2. Verbal RFI's will not be accepted nor answered. RFI's submitted via text messages (SMS, MMS, etc.) will not be accepted nor answered.
3. RFI's submitted via electronic mail shall be deemed as received when opened by the reviewer and not when sent by the submitter or received by the reviewer's server.
4. The Engineer's response shall be submitted directly to the Architect who in turn will forward it to the Contractor. The Engineer may also send a courtesy copy directly to the Contractor if authorized by the Architect.
5. RFI's that modify or amend the Contract Documents and/or will potentially result in a cost increase to the Project shall be authorized in writing by both the Architect and Engineer before the Contractor proceeds with any work.
6. Any additional cost associated with the RFI shall be clearly identified (dollar values for material cost and number of days for schedule impact) at the time the RFI is submitted.
7. The Engineer/Architect is not required to download RFI's or upload responses using any specific tracking software mandated by the Contractor. All such bookkeeping tasks are the sole responsibility of the Contractor.

E. RFI's shall be submitted in accordance with the following schedule:

1. The Contractor shall incorporate into his schedule and allow for three (3) working days per each RFI for the Engineer to review and respond to the RFI.
2. It is the Contractor's responsibility for assuring that RFI's are provided in a timely manner such that the overall project Schedule is not adversely impacted.
3. A large number of multiple RFI's submitted at one time shall be considered as individual submittals, and the 3-day review period shall be cumulative per individual submittal.
4. Any RFI received after 2:00 pm shall be considered to have been received the next business day.

F. Any verbal discussions between the Design Team and the Contractor that could possibly modify or amend the Contract Documents and/or will potentially result in a cost increase to the Project shall be documented via a written RFI. It is the responsibility of the Contractor, not the Engineer, to submit a written confirming RFI. The Contractor proceeds at his own risk and expense if he performs work that was not documented by a confirming RFI.

1.6 QUALITY ASSURANCE

A. The Contractor, his sub-contractors and materials suppliers warrant that no asbestos related products are used on this project.

B. The Contractor is solely responsible for the quality control and quality assurance of the Work, including placement, workmanship and materials furnished by his subcontractors and suppliers. Under no circumstances shall the Engineer/Architect be expected to act as the Contractor's quality control department.

C. The Materials Supplier(s) and Contractor are solely responsible for insuring that the constituent materials provided to the project comply with the requirements of this Specification.

D. The Contract Documents are complementary and shall be used in conjunction with each other. Items required by one design discipline shall be as binding as if required by all. Therefore, the contractor must provide copies of the structural and architectural drawings, and those of any other applicable design discipline, to each of the structural subcontractors prior to Bid. All bids must be based on a review of all of these drawings and not just the structural drawings.

E. The Contractor shall include in his services to the Owner a careful and detailed review of the Contract Documents. The purpose of the review is to identify any "scope gaps" that may exist between the various portions of the Contract Documents. The Contractor shall compare the Contract Documents and shall immediately bring to the engineer's attention, in writing, any error, omission, or inconsistency that he may discover. All conflicts shall be brought to the architect's attention prior to the commencement of any work.

F. In the event of any conflict among documents, including architectural and structural drawings and specifications, notify the Architect/Engineer prior to submitting proposal. In case of conflict between and/or among the structural drawings and specifications, the strictest interpretation shall govern, unless specified otherwise in writing by the Architect/Engineer.

G. Materials and operations may be tested and inspected by the Owner as work progresses. Failure to detect defective work or material early will not prevent rejection if a defect is discovered later nor shall it obligate the Architect/Engineer for final acceptance. Inspection or testing by others shall in no way relieve the Contractor of his responsibility to perform the Work in accordance with the Contract Documents.

1.7 QUALIFICATIONS

A. The wood panel supplier shall have a minimum of ten (10) years' experience in the manufacturing of structural wood panels. The supplier must be certified according to the requirements of the American Plywood Association.

B. The contractor and framing subcontractor shall have a minimum of five (5) years experience with buildings of at least this size, and the installation of wood panels

similar in material, design and extent to that indicated for this Project and whose work has resulted in construction with a record of successful service performance.

1.8 MATERIALS DELIVERY, STORAGE, AND HANDLING

A. Keep all sheathing off the ground. Protect panel sheathing from weather and deterioration. Do not store materials on the structure in a manner that might exceed the allowable loads on or cause distortion or damage to members or supporting structures.

B. Deliver all materials to the site in a manner to ensure the uninterrupted progress of work.

C. Provide all cranes, derricks and hoisting equipment required for the lifting and placement of the panel work. Include all fuel, maintenance, permits and certificates, inspection of the equipment. No crane, derrick, or hoisting equipment shall be operated without a certificate of operation and a certificate of on-site inspection, as required by governing authorities. All hoisting equipment shall be installed, operated and maintained in accordance with all applicable regulations of authorities having jurisdiction.

1.9 SUBSTITUTIONS AND CHANGES

A. No substitutions, revisions, or any other modifications to the Contract Documents, proposed by the Contractor, shall be made unless the following conditions are met:

1. All substitutions, revisions, or any other modifications are clearly identified as such on the shop drawings via a “cloud” or “box.” Each area so identified must be specifically approved by the Architect/Engineer in writing.
2. There is a substantial cost or schedule advantage to the Owner; or that the proposed revision is necessary to obtain the required materials or methods at the proper times to accomplish the work. In no case shall any revision proposed by the Contractor result in additional cost to the Owner.

B. Cost of Changes

1. The Contractor shall notify the Architect/Engineer in writing if a substitution or change will result in a cost increase to the project within five (5) working days of the date the change is proposed or initiated, regardless of who proposed or initiated the change. The Contractor shall submit to the Architect/Engineer in writing the cost of the substitution or change no later than fifteen (15) working days after the change is proposed or initiated.
2. The Contractor shall not be compensated for any change orders for a substitution or change, regardless of who proposed or initiated the change, where the Architect/Engineer are not notified of the cost of the change in accordance with the above.
3. The Architect/Engineer reserves the right to modify or cancel the substitution or change after their review of the cost information provided by the Contractor.

C. Value Engineering

1. Substitutions, revisions, or any other modifications to the Contract Documents for the purposes of reducing the cost of construction shall be made when requested by The Owner.
2. All such revisions shall include the cost of any re-design that is required of the Architect/Engineer.

PART 2 - PRODUCTS

2.1 WOOD PANELS

A. General

1. Refer to the Structural Drawings for the required thickness of the panels.
2. The manufacture of the panels shall be governed by DOC PS2.
3. The performance rating of the panels shall be governed by APA PRP-108.
4. All panels shall be made from Species Group 1 only.
5. Oriented strand board (OSB) shall not be used without the prior written consent of the Engineer, Architect, and Owner (all parties).

B. Bond Classification

1. All panels in exposed conditions shall use an exposure durability classification of “Exterior”.
2. All panels in severe exposures shall use an exposure durability classification of “Marine Grade”.
3. All other panels shall use an exposure durability classification of “Exposure 1”.

C. Grade

1. Single Floor Grades

a. Panels shall be “Sturd-I-Floor” as designated by APA.
b. Panels used in floor applications shall have their edges tongue and grooved.
c. Sturd-I-Floor panels shall have a minimum thickness of 19/32”.
d. Provide the following minimum span ratings for the thickness specified:

(1) 20” o.c. span rating for 19/32” and 5/8” panels
(2) 24” o.c. span rating for 23/32” and 3/4” panels
(3) 32” o.c. span rating for 7/8” and 1” panels
(4) 48” o.c. span rating for 1-1/8” panels

2. Sheathing Grades (APA Rated and Structural I)

a. 24/0 span rating for 3/8” panels
b. 24/16 span rating for 7/16” panels
c. 32/16 span rating for 15/32” and 1/2” panels
d. 40/20 span rating for 19/32” and 5/8” panels
e. 48/24 span rating for 23/32”, 3/4” and 7/8” panels

D. Plywood Plies

1. 3/8” and 11/32” plywood shall be a minimum of 3 plies
2. 15/32” and 19/32” plywood shall be a minimum of 4 plies
3. 23/32” plywood shall be a minimum of 5 plies.
4. Sturd-I-Floor panels shall be a minimum of 5 plies.

E. Load Capacities

1. Floor Applications - The minimum allowable load rating shall be 100 psf live load.
2. Roof Applications - The minimum allowable load rating shall be 65 psf live load.

2.2 PRESERVATIVE-TREATED PLYWOOD

A. Treated plywood shall be pressure-treated in accordance with AWPA C9 with creosote, pentachlorophenol, or waterborne preservatives, as required for the exposure that the panel will be subjected to in use. Plywood treated with waterborne preservatives shall be dried after treatment to a moisture content of 18 percent or less.

B. All treated plywood used in the Permanent Wood Foundation System (PWF) shall be marked by an approved inspection agency certified to inspect preservative-treated wood, indicating compliance with the treating, drying, retention and penetration requirements of AWPA Standard C22, or equivalent code-approved preservative-treating and quality control requirements.

2.3 BLOCKING

A. Blocking members shall be made of dimensional lumber of the same dimensions, species and grade of the framing members between which the blocking is installed.

B. The ends of all blocking pieces shall be cut square

2.4 NAILS

A. All nails shall be common nails hot-dipped galvanized unless noted otherwise in the plans and details.

2.5 PANEL CLIPS

A. Panel clips shall be hot-dipped galvanized with a minimum 20 ga. thickness.

PART 3 - EXECUTION

3.1 ROOF SHEATHING

A. The minimum panel thickness shall be as list below.

1. 19/32” sheathing grade panels. Note that a thicker panel may be specified in the Structural and/or Architectural Drawings.

2. For roofs that support concrete or clay tiles (10 psf or greater), shall use 23/32" sheathing grade panels. Exception: 19/32" sheathing panels may be used if specifically approved by the tile manufacturer that it is an acceptable substrate.

B. The roof joist/truss spacing shall not be greater than 24" o.c.

C. All panels shall use steel "H-Clips" (one midway between each support) regardless of thickness.

D. Do not install any piece of roof sheathing with shortest dimension of less than 24 inches unless support is provided under all edges.

E. Fasten the panels to the support framing with 10d nails, 3/8" from the panel edge, as specified below. Note that these are minimum nail patterns and a more stringent nail pattern may be specified on the Structural Drawings.

1. 2" thick (nominal) support framing

   a. 3" o.c. where roof diaphragm fastens to shear walls (wood, masonry or concrete), and at all shear wall struts and braces.
   b. 4" o.c. along entire perimeter of roof diaphragm
   c. 6" o.c. at all other panel edges.
   d. 12" o.c. at intermediate supports (within field of panel).

2. 3" thick (nominal) support framing

   a. 3" o.c. where roof diaphragm fastens to shear walls (wood, masonry or concrete), and at all shear wall struts and braces.
   b. 3" o.c. along entire perimeter of roof diaphragm
   c. 6" o.c. at all other panel edges.
   d. 12" o.c. at intermediate supports (within field of panel).

3.2 FLOOR SHEATHING

A. The minimum panel thickness shall be as list below.

1. 15/32" sheathing grade panels where floor framing is 16" o.c. Note that a thicker panel may be specified in the Structural and/or Architectural Drawings.
2. 19/32" Sturd-I-Floor or sheathing grade panels where floor framing is 20" o.c. Note that a thicker panel may be specified in the Structural and/or Architectural Drawings.
3. 23/32" Sturd-I-Floor or sheathing grade panels where floor framing is 24" o.c. Note that a thicker panel may be specified in the Structural and/or Architectural Drawings.

B. The floor joist/truss spacing shall not be greater than 24" o.c. (note that a closer spacing may be specified in the Structural Drawings).

C. Floor Covering Systems – whether a sheathing grade panel or a Sturd-I-Floor grade is required depends upon the type of floor covering. Refer to the Architectural Drawings and Specifications for the types of floor coverings.

1. Floors covered with single-layer flooring (ex.: carpet and pad) shall use Sturd-I-Floor grade panels. Refer to the Architectural Drawings for the type of flooring used.
2. Floors covered with multiple-layer flooring where the sheathing acts as “sub-flooring” shall use either sheathing grade or Sturd-I-Floor grade panels. Refer to the Architectural Drawings for the type of flooring used.
3. It is acceptable to use Sturd-I-Floor grade panels throughout an entire floor in the event that multiple flooring types are specified.

D. Edge Supports

1. Sturd-I-Floor panels used in floor applications shall have their edges tongue and grooved.
2. All panels 23/32” and thicker shall have their edges tongue and grooved.
3. All other panels shall use steel “H-Clips” (one midway between each support).

E. Fasten the panels to the support framing with 10d nails as specified below. Note that these are minimum nail patterns and a more stringent nail pattern may be specified on the Structural Drawings.

1. 2” thick (nominal) support framing

   a. 6” o.c. along entire perimeter of diaphragm
   b. 6” o.c. at all other panel edges.
   c. 12” o.c. at intermediate supports (within field of panel).

2. 3” thick (nominal) support framing

   a. 4” o.c. along entire perimeter of diaphragm
   b. 6” o.c. at all other panel edges.
   c. 12” o.c. at intermediate supports (within field of panel).

3.3 SHEARWALL SHEATHING

A. The minimum panel thickness shall be 3/8” for wood sheathed shearwalls. Note that a thicker panel may be specified in the Structural Drawings. Shearwalls sheathed with gypsum wall board or gypsum-based exterior panels are acceptable where shown in the structural drawings.

B. The wall stud spacing shall not be greater than 16” o.c.

C. All intermediate panel edges shall be blocked. Free panel edges are prohibited.

D. Fasten the panels to the wall framing with 10d nails as specified below. Note that these are minimum nail patterns and a more stringent nail pattern may be specified on the Structural Drawings.

1. 2” thick (nominal) wall framing - 6” o.c. at all panel edges.
2. 3” thick (nominal) wall framing - 2” o.c. at all panel edges.

3.4 STORAGE AND HANDLING

A. Properly store, handle and install all panels to assure superior in-service performance.

B. Do not store materials on the structure in a manner that might exceed the allowable loads on or cause distortion or damage to members or supporting structures.

C. Protect the edges and ends of panels, especially tongue-and-groove and shiplap-edged panels. Place panels to be moved by forklift on pallets or bunks when received to avoid damage by fork tines.

D. Panels to be transported on open truck beds should be covered with standard tarpaulins. For open railcar shipment, use “lumber wrap” to avoid extended weather exposure.

E. Store panels whenever possible under a roof, especially if they won’t be used soon after received. Keep sanded and other appearance grades away from open doorways, and weight down the top panel in a stack to help avoid any possible warpage from humidity. If moisture absorption is expected, cut steel banding on panel bundles to prevent edge damage.

F. Panels to be stored outside should be stacked on a level platform supported by 4x4 stringers or other blocking. Never leave panels or the platform in direct contact with the ground. Use at least three full-width supports along the eight-foot length of the panel – one centered and the others 12 to 16 inches from each end.

G. Cover the stack loosely with plastic sheets or tarps. Anchor the covering at the top of the stack, but keep it open and away from the sides and bottom to assure good ventilation. Tight coverings prevent air circulation and, when exposed to sunlight, create a “greenhouse” effect which may encourage mold formation.

3.5 INSTALLATION

A. Install panels so that their long edges are perpendicular to the framing support members and with panel continuous over two or more spans. Stagger the panels so that there is not a continuous panel joint.

B. For pitched roofs, place screened surface or side with skid-resistant coating up, if OSB panels are used. Wear skid-resistant shoes when installing and roof sheathing and keep roof deck free of dirt, debris and sawdust during construction.

C. Provide a 1/8” space between all panel ends and edges, and stagger all panel end joints.

D. Provide an expansion gap of ½” between floor sheathing and walls.

E. Sand sub-flooring joints to smooth surface prior to installing underlayment or finish flooring.

3.6 FIELD-GLUED FLOORS

A. For purposes of pricing, assume that all floor sheathing is nailed and glued to each structural support using a continuous bead of glue. The requirement for glue may be waived only if approved in writing by both the Architect and Engineer.

B. When nailed and glued floors are specified for the project, use adhesives meeting APA Specification AFG-01 or ASTM D3498, applied in accordance with the manufacturer's recommendations, with a minimum thickness of ¼".

C. Use only solvent-based glues for OSB panels with sealed surfaces and edge. Check with panel manufacturer for the appropriate adhesive to use.

D. Apply a continuous line of glue (1/8" thick) in the groove of all tongue-and-groove panels.

3.7 UNDERLAYMENT

A. Install underlayment with the face grain across supports.

B. Stagger panel end joints with respect to each other and offset all joints by at least two inches from joints in the subflooring panels. Butt panel ends and edges to a close but not tight fit (1/32" space is recommended).

C. Nail 6" o.c. along panel edges and 8" o.c. each way throughout remainder of panel with 3d ring-shank nails for panel thicknesses of 11/32" to ½", or 4d spaced 6" o.c. along edges and 12" o.c. each way for thicker panels up to ¾". Fastener length should be approximately equivalent to the total thickness of the underlayment and sub-flooring.

3.8 PROTECTION

A. Protect all sheathing from rain and other weather to prevent deterioration, delamination or other damage. Do not allow any sheathing to be subjected to standing water.

B. Any damaged sheathing shall be replaced at the Contractor's expense. Under no circumstances shall the Engineer or Architect inspect or approve any damaged sheathing or sheathing that is suspected of deterioration.

END OF SECTION 061600

SECTION 061700 – ENGINEERED STRUCTURAL WOOD

PART 1 - GENERAL

1.1 DESCRIPTION OF WORK

A. This Reference Specification covers materials, fabrication, placement, and tolerances of the engineered structural wood work. Provisions of this Specification shall govern except where other provisions are specified in the Contract Documents.

B. The extent of the engineered structural wood work is shown in the Contract Documents. Furnish all labor, materials, services, equipment and hardware required in conjunction with or related to the detailing, fabricating, delivery and placing of the engineered structural wood work.

C. Loadbearing wood framing and structural wood panels are specified in other Division 6 sections.

1.2 DEFINITIONS

A. Contract Documents - The Structural AND Architectural drawings, and the drawings of the other design disciplines. The Contract Documents shall include all schedules, notes and details. Contract Documents may be amended or clarified during the course of construction via Bulletins, Requests for Information (RFI), supplemental sketches, etc. issued by the Design Team. The Contract Documents are not assembly instructions nor are they layout drawings.

B. Laminated Veneer Lumber (LVL) - is an engineered wood product that uses multiple veneers of thin wood assembled with adhesives. LVL is one type of structural composite lumber and is similar in appearance to plywood.

C. Laminated strand lumber (LSL) - is an engineered wood product that uses multiple strands of thin wood assembled with adhesives. LSL is one type of structural composite lumber and is similar in appearance to oriented strand board (OSB).

D. Parallel Strand Lumber (PSL) - is similar to LVL but rather than being manufactured from full, parallel veneers, PSL uses veneers with more defects in a more random-looking pattern. PSL is one type of structural composite lumber.

E. Wood I-joist - is comprised of two main parts: the web and flange. The web is sandwiched between a top and bottom flange, creating the “I” shape. The flange can be made from laminated veneer lumber or solid wood finger-jointed together. It is grooved on one side to receive the web. The web is typically made from plywood, laminated veneer lumber, or oriented strand board.

1.3 REFERENCE STANDARDS

A. The following Standards (most recent editions) are referred to in this specification:

1. International Code Council (ICC-ES):

    a. LVL Report Number: ESR-2403
    b. LSL Report Number: ESR-2403
    c. I-Joist Report Number: ESR-1305.
    d. I-Joist APA Product Report Number: PR-L238

2. Canadian Construction Materials Centre (CCMC):

    a. LVL Report Number: 11518-R.
    b. LSL Report Number: 13319-R.
    c. I-Joist Report Number: 12412-R.
    d. APA Rated Rim Board Report Number: 13308-R.

3. American Society for Testing and Materials International (ASTM):

    a. ASTM E90 - Standard Test Method for Laboratory Measurement of Airborne Sound Transmission Loss of Building Partitions and Elements.
    b. ASTM E119 - Standard Test Methods for Fire Tests of Building Construction and Materials.

1.4 SUBMITTALS

A. Submittals required in this Reference Specification shall be submitted for review. Submit the following data and drawings for review prior to any fabrication, execution or erection:

1. Submit the following mandatory data – no mandatory data is required.
2. Submit the following data when requested by the Engineer:

    a. Proof of grade
    b. Unit cost data

B. Submittals shall be provided in electronic format (PDF) only, and review comments to the submittals shall be returned in the same format.

C. Submittals shall be provided in accordance with the following schedule:

1. The Contractor shall incorporate into his schedule and allow for a minimum of ten (10) working days per each item submitted for the Engineer's review of the submittal.
2. It is the Contractor's responsibility for assuring that submittals are provided in a timely manner such that the overall project schedule is not adversely impacted.
3. Multiple items submitted at one time shall be considered as individual submittals, and the 10-day review period shall be cumulative per individual submittal.
4. Any submittals received after 2:00 pm shall be considered to have been received the next business day. Electronic submittals shall be deemed as received when opened by the reviewer and not when sent by the submitter or received by the reviewer's server.

D. Submittals shall be reviewed in the following manner:

1. Submittals and shop Drawings are NOT part of the Contract Documents and only represent the submitter's interpretation of the Contract Documents. All submittals are of the Contractor, by the Contractor and for the Contractor's own use in his work plan, and for demonstrating his proposed construction means, methods, techniques, sequences and procedures to carry out requirements of the actual Contract Documents.
2. The Contractor is solely responsible for reviewing, verifying and approving the submittal(s), and the coordination of the Work between the various construction trades. It is the Contractor's responsibility to verify dimensions and elevations; order quantities; give assembly or fabrication instructions, and produce layout drawings for field use.
3. It is the Contractor's responsibility to coordinate his subcontractors' submittals. Any redlines or comments made to one submittal shall be transferred and applied by the Contractor to the submittal(s) of the other affected subcontractor(s).
4. The Contractor shall mark each submittal as "Approved" prior to forwarding them to the Architect/Engineer. Submittals that are not approved by the Contractor first will not be reviewed by the Architect/Engineer.
5. In no way shall changes initiated by the submitter and included in the submittal(s) supersede or revise the Contract Documents.
6. Any subsequent review of the submittal(s) by the Engineer shall in no way relieve the Contractor of his own responsibility to review and approval the submittal(s), to identify and correct deviations from the Contract Documents, or in any way protect the Contractor.
7. Review of the submittals by the Engineer is only for the conceptual compliance with the design intent and general compliance with the Contract Documents. Those items to be reviewed by the Engineer are solely at the discretion of the Engineer, and not all items will be reviewed by the Engineer.
8. Review comments (a/k/a "redlines") provided by the Architect/Engineer shall apply to all subsequent pages and all subsequent sets of the submittal regardless of whether each page is redlined or not. Redlines shall be considered cumulative from page to page and submittal to submittal. The Architect/Engineer is not required to review, annotate or stamp every sheet.
9. It is the Contractor's responsibility to ensure that electronic redlines are properly distributed to the subcontractor(s) and that said comments remain affixed to the electronic submittal (warning: electronic comments may not print on hard copies depending upon the software used by the person printing the reviewed submittal).
10. Revisions to shop drawings and calculations may be required in response to redlines provided by the Architect/Engineer. Such revisions are a normal part of the submittal review process and are to be expected. All costs associated with revising and re-submitting any shop drawing and/or calculations shall be borne solely by the Contractor and his subcontractors. Revising the field-use drawings to accommodate any redlines shall be the responsibility of the Contractor.
11. Any structural members for which mandatory shop drawings have not been reviewed and approved by the Contractor, and reviewed by the Engineer, but are fabricated, erected, or installed are done so at the Contractor's risk.

12. The Engineer/Architect is not required to download or upload submittals using any specific tracking software mandated by the Contractor.
13. The Engineer shall not sign and seal any submittal.

1.5 REQUESTS FOR INFORMATION (RFI)

A. The Contractor may submit a Request for Information ("RFI") on an as-needed basis. The purpose of the RFI is for the Contractor to obtain clarifications or request additional information from the Design Team, or to propose an alternate solution such that the construction of the Work may proceed in an efficient manner.

B. RFI's shall be submitted in writing in electronic format (PDF) only, and responses to the RFI's shall be returned in the same format.

C. Each RFI shall contain the following minimum information:

1. A specific question for which an answer is requested.
2. The name of the company and person submitting the RFI
3. Additional cost associated with the RFI
4. Explanatory sketches or photos (highly recommended)
5. A proposed solution, if any

D. RFI's shall be submitted and processed in the following manner:

1. All RFI's shall be submitted directly to the Architect, who in turn will forward it to the Engineer. A copy may be sent directly to the Engineer, at the Contractor's option and if authorized by the Architect, but the official copy (the copy that is tracked) shall be the one submitted to the Architect.
2. Verbal RFI's will not be accepted nor answered. RFI's submitted via text messages (SMS, MMS, etc.) will not be accepted nor answered.
3. RFI's submitted via electronic mail shall be deemed as received when opened by the reviewer and not when sent by the submitter or received by the reviewer's server.
4. The Engineer's response shall be submitted directly to the Architect who in turn will forward it to the Contractor. The Engineer may also send a courtesy copy directly to the Contractor if authorized by the Architect.
5. RFI's that modify or amend the Contract Documents and/or will potentially result in a cost increase to the Project shall be authorized in writing by both the Architect and Engineer before the Contractor proceeds with any work.
6. Any additional cost associated with the RFI shall be clearly identified (dollar values for material cost and number of days for schedule impact) at the time the RFI is submitted.
7. The Engineer/Architect is not required to download RFI's or upload responses using any specific tracking software mandated by the Contractor. All such bookkeeping tasks are the sole responsibility of the Contractor.

E. RFI's shall be submitted in accordance with the following schedule:

1. The Contractor shall incorporate into his schedule and allow for three (3) working days per each RFI for the Engineer to review and respond to the RFI.

2. It is the Contractor's responsibility for assuring that RFI's are provided in a timely manner such that the overall project Schedule is not adversely impacted.
3. A large number of multiple RFI's submitted at one time shall be considered as individual submittals, and the 3-day review period shall be cumulative per individual submittal.
4. Any RFI received after 2:00 pm shall be considered to have been received the next business day.

F. Any verbal discussions between the Design Team and the Contractor that could possibly modify or amend the Contract Documents and/or will potentially result in a cost increase to the Project shall be documented via a written RFI. It is the responsibility of the Contractor, not the Engineer, to submit a written confirming RFI. The Contractor proceeds at his own risk and expense if he performs work that was not documented by a confirming RFI.

1.6 QUALITY ASSURANCE

A. The Contractor, his sub-contractors and materials suppliers warrant that no asbestos related products are used on this project.

B. The Contractor is solely responsible for the quality control and quality assurance of the Work, including placement, workmanship and materials furnished by his subcontractors and suppliers. Under no circumstances shall the Engineer/Architect be expected to act as the Contractor's quality control department.

C. The Materials Supplier(s) and Contractor are solely responsible for insuring that the constituent materials provided to the project comply with the requirements of this Specification.

D. The Contract Documents are complementary and shall be used in conjunction with each other. Items required by one design discipline shall be as binding as if required by all. Therefore, the contractor must provide copies of the structural and architectural drawings, and those of any other applicable design discipline, to each of the structural subcontractors prior to Bid. All bids must be based on a review of all of these drawings and not just the structural drawings.

E. The Contractor shall include in his services to the Owner a careful and detailed review of the Contract Documents. The purpose of the review is to identify any "scope gaps" that may exist between the various portions of the Contract Documents. The Contractor shall compare the Contract Documents and shall immediately bring to the engineer's attention, in writing, any error, omission, or inconsistency that he may discover. All conflicts shall be brought to the architect's attention prior to the commencement of any work.

F. In the event of any conflict among documents, including architectural and structural drawings and specifications, notify the Architect/Engineer prior to submitting proposal. In case of conflict between and/or among the structural drawings and specifications, the strictest interpretation shall govern, unless specified otherwise in writing by the Architect/Engineer.

G. Materials and operations may be tested and inspected by the Owner as work progresses. Failure to detect defective work or material early will not prevent rejection if a defect is discovered later nor shall it obligate the Architect/Engineer for final acceptance. Inspection or testing by others shall in no way relieve the Contractor of his responsibility to perform the Work in accordance with the Contract Documents.

1.7 QUALIFICATIONS

A. The materials supplier shall have a minimum of five (5) years' experience in the manufacturing of engineered structural wood members.

B. The contractor and wood framing subcontractor shall have a minimum of five (5) years' experience with buildings of at least this size, and the installation of concrete similar in material, design and extent to that indicated for this Project and whose work has resulted in construction with a record of successful service performance.

1.8 MATERIALS DELIVERY, STORAGE, AND HANDLING

A. Store products in manufacturer's unopened packaging until ready for installation and as follows:

1. Store materials protected from exposure to harmful weather conditions and at temperature conditions recommended by manufacturer.
2. Keep materials dry and store on a hard, dry, level surface not in contact with the ground.
3. Store materials in wrapped and strapped bundles stacked no more than 10 feet high.
4. Support bundles to prevent excessive bowing. Support and separate bundles with dimension lumber spaced no more than 10 feet apart. Keep supports in line vertically.
5. Handle individual pieces in a manner to prevent physical damage during measuring, cutting and erection.

B. Deliver all materials to the site in a manner to ensure the uninterrupted progress of work.

C. Provide all cranes, derricks and hoisting equipment required for the lifting and placement of the wood work. Include all fuel, maintenance, permits and certificates, inspection of the equipment. No crane, derrick, or hoisting equipment shall be operated without a certificate of operation and a certificate of on-site inspection, as required by governing authorities. All hoisting equipment shall be installed, operated and maintained in accordance with all applicable regulations of authorities having jurisdiction.

1.9 SUBSTITUTIONS AND CHANGES

A. No substitutions, revisions, or any other modifications to the Contract Documents, proposed by the Contractor, shall be made unless the following conditions are met:

1. All substitutions, revisions, or any other modifications are clearly identified as such on the shop drawings via a “cloud” or “box.” Each area so identified must be specifically approved by the Architect/Engineer in writing.
2. There is a substantial cost or schedule advantage to the Owner; or that the proposed revision is necessary to obtain the required materials or methods at the proper times to accomplish the work. In no case shall any revision proposed by the Contractor result in additional cost to the Owner.

B. Cost of Changes

1. The Contractor shall notify the Architect/Engineer in writing if a substitution or change will result in a cost increase to the project within five (5) working days of the date the change is proposed or initiated, regardless of who proposed or initiated the change. The Contractor shall submit to the Architect/Engineer in writing the cost of the substitution or change no later than fifteen (15) working days after the change is proposed or initiated.
2. The Contractor shall not be compensated for any change orders for a substitution or change, regardless of who proposed or initiated the change, where the Architect/Engineer are not notified of the cost of the change in accordance with the above.
3. The Architect/Engineer reserves the right to modify or cancel the substitution or change after their review of the cost information provided by the Contractor.

C. Value Engineering

1. Substitutions, revisions, or any other modifications to the Contract Documents for the purposes of reducing the cost of construction shall be made when requested by The Owner.
2. All such revisions shall include the cost of any re-design that is required of the Architect/Engineer.

PART 2 - PRODUCTS

2.1 LAMINATED WOOD VENEER LUMBER (LVL)

A. LVL members shall be comprised of ultrasonically and visually graded veneers arranged to specific patterns so that naturally occurring defects have no concentrated effect on the member's performance. Use only a waterproof adhesive bonded and cured under pressure and heat.

B. All members permanently exposed to the weather shall have a water-resistant coating provided by the manufacturer.

C. Grades shall be as specified in the plans and details. Acceptable grades include 2900Fb-2.0E, 2400Fb-1.7E and 2250Fb-1.5E. Use 2900Fb-2.0E if no grade is specified.

D. Member depths shall be as specified in the plans and details.

E. Member thicknesses shall be as specified in the plans and details. Note that the overall thickness is specified in the structural drawings. Use multiple plies ganged together to achieve the overall thickness.

2.2 LAMINATED WOOD STRAND LUMBER (LSL)

A. LSL members shall be comprised of strands arranged parallel to the finished product's length. MDI, bonded and cured under pressure and heat.

B. All members permanently exposed to the weather shall have a water-resistant coating provided by the manufacturer.

C. Grades shall be as specified in the plans and details. Acceptable grades include 2640Fb-1.75E, 2360Fb-1.55E and 1730Fb-1.35E. Use 2640Fb-1.75E if no grade is specified.

D. Member depths shall be as specified in the plans and details.

E. Member thicknesses shall be as specified in the plans and details. Note that the overall thickness is specified in the structural drawings. Use multiple plies ganged together to achieve the overall thickness. Individual plies shall be either 1-1/2”, 1-3/4” or 3-1/2”. Use ply thicknesses that result in the least number of plies.

2.3 PARALLEL STRAND LUMBER (PSL)

A. PSL members shall be comprised of strands arranged parallel to the finished product's length bonded and cured under pressure and heat.

B. All members permanently exposed to the weather shall have a water-resistant coating provided by the manufacturer.

C. Grades shall be as follows:

1. Beams: 2900Fb-2.0E
2. Columns: 2500Fc-1.8E

D. Member depths shall be as specified in the plans and details.

E. Member thicknesses shall be as specified in the plans and details. Use only solid single members—ganging of multiple plies is not permitted.

2.4 WOOD I-JOISTS

A. Top and bottom chords shall be permanently attached to oriented strand board webs. Chords shall be one of the following:

1. Solid sawn lumber, 2-1/2” or 3-1/2” wide
2. Laminated veneer lumber, 1-3/4”, 2-1/16”, 2-1/4” or 3-1/4” wide

B. Member depths shall be as specified in the plans and details.

2.5 RIM BOARD

A. Rim boards shall be either cross ply LVL or LSL members. Member thicknesses shall be as specified in the plans and details. Note that the overall thickness is specified in the structural drawings. Use multiple plies ganged together to achieve the overall thickness. Individual plies shall be one or more of the following:

1. 1-1/4” thick LVL

   a. Grade 1750Fb-1.30E
   b. Compressive strength = 680 psi

2. 1-1/2” thick LSL

   a. Grade 1730Fb-1.35E
   b. Compressive strength = 750 psi

PART 3 - EXECUTION

3.1 EXAMINATION

A. Do not begin installation until supporting work has been properly prepared.

B. If supporting work is the responsibility of another installer, notify Architect of unsatisfactory work before proceeding.

3.2 PREPARATION

A. Prepare surfaces using the methods recommended by the manufacturer for achieving the best result for the installation under the project conditions.

3.3 GENERAL INSTALLATION

A. Install in strict accordance with manufacturer's instructions.

B. Holes through the sides of members are allowed only in areas as approved by the manufacturer. No square holes are allowed and drill no holes in cantilevers. Do not locate holes with 12” of the end support. Note that the size, quantity and location of the holes is restricted (refer to the manufacturer’s installation instructions). Place holes only within the middle 1/3 depth of the member.

C. Conditions and Practices Not Permitted

1. Do not place holes closer to supports than recommended by manufacturer.
2. Do not over cut holes and damage flanges.
3. Do not make holes with hammer unless a knockout is provided for this purpose.
4. Do not hammer on flange and damage joist.
5. Do not cut, notch or drill flange.
6. Do not use 16d or larger nails in flange.
7. Do not bevel cut joist ends inside edge of bearing.

8. Do not support joist on web.
9. Do not install visibly damaged joists.

3.4 I-JOIST INSTALLATION

A. Accurately fit, align, securely fasten and install free from distortion or defects.

B. Conditions and Practices Required

1. Carefully unload joists by lifting, using forklifts or cranes to avoid damage.
2. Keep joists stored in wrapped and strapped bundles stacked no more than 10 feet high.
3. Support bundles to prevent excessive bowing. Support and separate bundles with dimension lumber spaced no more than 10 feet apart. Keep supports in line vertically.
4. Handle individual joists in a manner to prevent physical damage during measuring, cutting and erection.
5. Handle joists vertically, not horizontally (flat).
6. Use at least 1x4 temporary bracing members nailed to each joist with two 8d common nails. Keep rows of bracing parallel at no more than 8 feet apart.
7. Use long pieces for bracing, not short blocks. Lap ends to form a continuous line of bracing.
8. Anchor bracing at ends and at 25 feet intervals into a stable end wall or an area braced by sheathing or diagonal bracing.
9. Exercise caution when removing temporary bracing when applying sheathing. Remove bracing as sheathing is attached.
10. All rim joists, blocking, connections and temporary bracing shall be installed before erectors are allowed on the structure.
11. Impose no loads other than the weight of the erectors on the structure before it is permanently sheathed.
12. After sheathing, do not exceed design loads on joists with construction materials.
13. Support joists laterally at end bearings and cantilevers.
14. I-joists shall have a minimum end bearing length of 1-1/2 inches for all I-joists having a depth not greater than 16 inches and a minimum end bearing length of 2-1/2 inches for all I-joists deeper than 16 inches. All I-joists require a minimum intermediate bearing length of 3-1/2 inches regardless of series and depth.
15. Refer to drawings and member schedule for end bearing and interior bearing stiffener requirements.

C. Stiffeners

1. Provide web stiffeners both sides at all interior bearing points
2. Provide double squash blocks where wall above bears on joist. Squash blocks shall be 2x4 minimum and cut 1/16" taller than joist.
3. Provide matching squash blocks (cripples) required under all post loads
4. Provide web fillers at all hanger connections and cantilevers

3.5 LVL AND PSL INSTALLATION

A. Install laminated veneer lumber plumb and level.

B. Accurately fit, align, securely fasten and install free from distortion or defects.

C. Multiple Plies

1. Solid Billets

   a. Column members shall be solid billets only
   b. Beam members should be solid billets wherever possible; multiple plies are acceptable when properly fastened to each other. For wide beams use the thickest billet available and fasten thinner plies to it.

2. Fastening of Multiple Plies - Plies shall be fastened to each other using 0.220” diameter x full embedment Simpson SDWS timber screws as follows:

   a. Two rows of screws for beam depths up to 12”. Three rows of screws for beam depths up to 18”.
   b. Space at 8” minimum and 12” maximum along a row; stagger between rows
   c. 4” minimum between rows
   d. 2” minimum edge distance; 6” minimum end distance

D. Temporary Bracing

1. LVL shall be securely braced during construction. Temporary bracing shall be anchored to the ground, foundation, a braced wall or other completed, stable section of the structure.
2. Exercise caution when removing temporary bracing when applying sheathing. Remove bracing as sheathing is attached.
3. All rim joists, blocking, connections and temporary bracing shall be installed before erectors are allowed on the structure.
4. Impose no loads other than the weight of the erectors on the structure before it is permanently sheathed.
5. After sheathing, do not exceed design loads on members with construction materials.
6. Support members laterally at end bearings and cantilevers.
7. All conditions calling for notched or drilled beams must be reviewed and approved by the manufacturer.

3.6 LSL INSTALLATION

A. Install laminated strand lumber plumb and level.

B. Accurately fit, align, securely fasten and install free from distortion or defects.

C. Temporary Bracing

1. Securely brace LSL during construction by anchoring to the ground, foundation, a braced wall or other completed, stable section of the structure.
2. Support members laterally at end bearings and cantilevers.
3. Install all rim joists, blocking, connections and temporary bracing before erectors are allowed on the structure.

4. Impose no loads other than the weight of the erectors on the structure before it is permanently sheathed.
5. Exercise caution when removing temporary bracing to apply sheathing.
6. After sheathing, do not exceed design loads on members with construction materials.
7. All conditions calling for notched or drilled beams must be reviewed and approved by the manufacturer.

END OF SECTION 061700

SECTION 061753 – PREFABRICATED WOOD TRUSSES

PART 1 - GENERAL

1.1 DESCRIPTION OF WORK

A. This Reference Specification covers materials, fabrication, and placement of shop-fabricated wood floor and roof trusses. Provisions of this Specification shall govern except where other provisions are specified in the Contract Documents.

B. Extent of the truss work is shown in the Contract Documents. Furnish all labor, materials, services, equipment and hardware required in conjunction with or related to the detailing, fabricating, delivery and placing of the truss work.

C. Wood sheathing and decking, and other wood framing are specified in other Division 6 sections. Glue laminated and other pre-engineered wood products (if any) are specified in other Division 6 sections.

1.2 DEFINITIONS

A. Contract Documents - The Structural AND Architectural drawings, and the drawings of the other design disciplines. The Contract Documents shall include all schedules, notes and details. Contract Documents may be amended during the course of construction via Bulletins, Requests for Information (RFI), supplemental sketches, etc. issued by the Design Team.

B. Structural Engineer-of-Record ("SEOR") – a professional engineer, licensed in the state that this project is permitted, who is responsible for the planning, design, coordination, and arrangement of the overall structural project. The SEOR is shown in the title block of the structural drawings.

C. Truss Engineer - a professional engineer, licensed in the state that this project is permitted, to whom the SEOR has delegated the responsibility for designing the wood trusses, truss-to-truss connections, temporary and permanent bracing, and temporary erection supports. The Truss Engineer shall be hired by the Truss Fabricator.

D. Truss Fabricator – the entity responsible for manufacturing and delivering the wood trusses to the project.

E. Truss Erector – the entity responsible for installing the trusses to their final, in-place condition.

F. Main Wind-Force Resisting System (MWFRS) – an assemblage of structural elements assigned to provide support and stability for the overall structure. For the purposes of this Specification, a truss is considered an assemblage of structural elements. Wind pressures to be used for MWFRS are provided in ASCE 7.

G. Components and Cladding (C&C) – individual elements of an assemblage that directly receive wind pressures (ex.: chords of roof trusses). Wind pressures to be used for C&C are provided in ASCE 7.

1.3 REFERENCE STANDARDS

A. The following Standards (most recent editions) are referred to in this specification:

1. "Standard Responsibilities in the Design Process Involving Metal Plate Connected Wood Trusses (WTCA 1)", as published by WTCA
2. "National Design Specification (NDS) for Wood Construction, ANSI/TPI 1", as published by AF&PA's.
3. "Metal Plate Connected Wood Truss Handbook", as published by WTCA.
4. "The National Design Standard for Metal Plate Connected Wood Truss Construction (ANSI/TPI 1)", as published by TPI.
5. "ASCE 7: Minimum Design Loads for Buildings and Other Structures", as published by the American Society of Civil Engineers.
6. "Guide to Good Practice for Handling, Installing, Restraining & Bracing of Metal Plate Connected Wood Trusses", Building Component Safety Information (BCSI), as published by WTCA/TPI.
7. "Structural Lumber: Fire Retardant Treatment by Pressure Process (Standard C20)" as published by AWPA

B. The following ASTM Standards are referred to in this specification:

1. ASTM A653 "Standard Specification for Steel Sheet, Zinc-Coated (Galvanized) or Zinc-Iron Alloy-Coated (Galvannealed) by the Hot-Dip Process"
2. ASTM "A924 Standard Specification for General Requirements for Steel Sheet, Metallic-Coated by the Hot-Dip Process"

C. The following organizations are referred to in this specification:

1. American Forest & Paper Association's (AF&PA's)
2. American Wood Preservers Association (AWPA)
3. Truss Plate Institute (TPI)
4. Wood Truss Council of America (WTCA)

D. The standard trade practices as specified in WTCA 1, as indicated above, shall govern the design, fabrication and erection of the wood trusses. In the event of a conflict between WTCA 1 and the Contract Documents or this Specification, the Contract Documents and this Specification shall govern. The following exceptions are taken to WTCA 1:

1. Section 3.1: (clarification) The SEOR has no control over and is not responsible for adverse influences caused by moisture, temperature, corrosive chemicals, gases or other such sources.
2. Section 3.2.4: Strike the phrase "including the Trusses".
3. Section 3.3: Strike the phrase "and the effect of the structure on each Truss."
4. Section 3.4: Replace the term "Building Designer" with the term "Truss Engineer"

1.4 SUBMITTALS

A. Submittals required in this Reference Specification shall be submitted for review. Submit the following data and drawings for review prior to any fabrication, execution or erection:

1. Submit the following mandatory data:

a. Truss shop drawings, signed and sealed by the Truss Engineer, shall include the following minimum information:

(1) Plan of truss layout with location, spacing, placement, and slope or depth of all trusses
(2) Location of girder trusses, LVL beams and any other members that carry trusses
(3) For trusses bearing on steel members, truss locations coordinated with the members and bolt locations as shown in the steel shop drawings
(4) Required bearing widths
(5) Connection requirements for:

(a) All truss to truss connections
(b) All truss ply to ply connections
(c) Field assembly of trusses

b. Calculations for each truss (record copies only), signed and sealed by the Truss Engineer, shall include the information specified below. Each truss calculation shall be marked so that it corresponds to the truss mark shown on the shop drawing.

(1) Design loads including top chord live load (including snow loads), top chord dead load, bottom chord live load, bottom chord dead load, concentrated loads and their points of application, and controlling wind and earthquake loads expressed in units of force per unit area.
(2) Adjustments to lumber and metal connector plate design values for conditions of use
(3) Each reaction force and direction
(4) Metal connector plate type, size, thickness or gauge, and the dimensioned location of each metal connector plate except where symmetrically located relative to the joint interface
(5) Calculated deflection ratio and maximum deflection for live and total load
(6) Lumber size, species, and grade for each member

2. Submit the following data when requested by the Engineer:

a. Certified record that connector plate materials comply with the steel specifications herein.
b. Certificate of compliance that the lumber complies with the fire retardant specifications herein.
c. Unit cost data

B. Submit the following number of copies for each submittal:

1. Hard Copies

   a. Items submitted for review – a minimum of two (2) copies up to a maximum of five (5) copies, with one (1) copy being retained by the Engineer. Review comments (a/k/a "redlines") provided by the Engineer shall be transferred to a total of five (5) submittal sets. The Contractor is responsible for transferring redlines on to any sets in excess of the five (5) sets specified.
   b. Items submitted for record purposes only – One (1) copy to be retained by the Engineer. Additional copies to be provided directly to others as directed.

2. Electronic copies of submittals may be submitted in lieu of hard copies when mutually authorized in advance by the Engineer, Architect and Contractor.

C. Submittals shall be provided in accordance with the following schedule:

1. The Contractor shall incorporate into his schedule and allow for a minimum of ten (10) working days per each item submitted for the Engineer's review of the submittal.
2. It is the Contractor's responsibility for assuring that submittals are provided in a timely manner such that the overall project schedule is not adversely impacted.
3. Multiple items submitted at one time shall be considered as individual submittals, and the 10-day review period shall be cumulative per individual submittal.
4. Any submittals received after 2:00 pm shall be considered to have been received the next business day. Electronic submittals shall be deemed as received when opened by the reviewer and not when sent by the submitter or received by the reviewer's server.

D. Submittals shall be reviewed in the following manner:

1. Submittals and shop Drawings are NOT part of the Construction Contract Documents and only represent the submitter's interpretation of the Contract Documents. All submittals are of the Contractor, by the Contractor and for the Contractor's own use in his work plan, and for demonstrating his proposed construction means, methods, techniques, sequences and procedures to carry out requirements of the actual Contract Documents
2. Review of the submittals is only for the conceptual compliance with the design intent and general compliance with the Contract Documents. It is not to verify order quantities, give assembly or fabrication instructions, coordinate the Contractor's subcontractors, or protect the Contractor.
3. In no way shall changes initiated by the submitter and included in the submittal(s) supersede or revise the Contract Documents. The Contractor is solely responsible for reviewing, verifying and approving the submittal(s), and the coordination of the Work between the various construction trades. Any review of the submittal(s) by Engineer shall in no way relieve the Contractor of his responsibility to review and approval the submittal(s), for deviations from the Contract Documents, or for any errors or omissions in the submittals.
4. The Contractor shall review and approve all submittals prior to submitting them to the Architect/Engineer. Failure to review each submittal shall in no way relieve

the Contractor of his own responsibility to correct items that do not comply with the Contract Documents.

5. Review comments (a/k/a “redlines”) provided by the Architect/Engineer shall apply to all subsequent pages and all subsequent sets of the submittal regardless of whether each page is redlined or not. Redlines shall be considered cumulative from submittal to submittal. The Architect/Engineer is not required to annotate or stamp every sheet.
6. Review comments for electronic submittals shall be provided in an electronic format only. It is the Contractor’s responsibility to ensure that electronic redlines are properly distributed to the subcontractor(s) and that said comments remain affixed to the electronic submittal (warning: electronic comments may not print on hard copies depending upon the software used by the person printing the reviewed submittal).
7. Revisions to shop drawings and calculations may be required in response to redlines provided by the Architect/Engineer. Such revisions are a natural part of the submittal review process and are to be expected. All costs associated with revising and re-submitting any shop drawing and/or calculations shall be borne solely by the Contractor and his subcontractors. Revising the field-use drawings to accommodate any redlines shall be the responsibility of the Contractor.
8. Structural members for which mandatory shop drawings have not been reviewed by the Engineer, and reviewed and approved by the Contractor, shall not be fabricated, erected, or installed (no exceptions).
9. The Engineer shall not “stamp” any submittal.

1.5 REQUESTS FOR INFORMATION (RFI)

A. The Contractor may submit a Request for Information (“RFI”) on an as-needed basis. The purpose of the RFI is for the Contractor to obtain clarifications or request additional information from the Design Team, or to propose an alternate solution such that the construction of the Work may proceed in an efficient manner.

B. Each RFI shall contain the following minimum information:

1. A specific question for which an answer is requested.
2. The name of the company and person submitting the RFI
3. Additional cost associated with the RFI
4. Explanatory sketches or photos (highly recommended)
5. A proposed solution, if any

C. RFI’s shall be submitted and processed in the following manner:

1. All RFI’s shall be submitted directly to the Architect, who in turn will forward it to the Engineer. A copy may be sent directly to the Engineer, at the Contractor’s option and if approved by the Architect, but the official copy (the copy that is tracked) shall be the one submitted to the Architect.
2. RFI’s shall be submitted in writing only; verbal RFI’s will not be accepted nor answered. RFI’s submitted electronically via email shall be deemed as received when opened by the reviewer and not when sent by the submitter or received by the reviewer’s server. RFI’s submitted via text messages (SMS, MMS, etc.) will not be accepted or answered.

3. The Engineer's response shall be submitted directly to the Architect who in turn will forward it to the Contractor. The Engineer may also send a courtesy copy directly to the Contractor.
4. RFI's that modify or amend the Contract Documents and/or will potentially result in a cost increase to the Project shall be approved in writing by both the Architect and Engineer before the Contractor proceeds with any work.
5. Any additional cost associated with the RFI shall be clearly identified (dollar values for material cost and number of days for schedule impact) at the time the RFI is submitted.
6. RFI's submitted electronically shall be done via e-mail in an appropriate format (i.e., PDF) and shall be returned via email in the same format. The Engineer/Architect is not required to download RFI's or upload responses using any specific tracking software mandated by the Contractor. All such bookkeeping tasks are the sole responsibility of the Contractor.

D. RFI's shall be submitted in accordance with the following schedule:

1. The Contractor shall incorporate into his schedule and allow for three (3) working days per each RFI for the Engineer to review and respond to the RFI.
2. It is the Contractor's responsibility for assuring that RFI's are provided in a timely manner such that the overall project Schedule is not adversely impacted.
3. A large number of multiple RFI's submitted at one time shall be considered as individual submittals, and the 3-day review period shall be cumulative per individual submittal.
4. Any RFI received after 2:00 pm shall be considered to have been received the next business day.

E. Any verbal discussions between the Design Team and the Contractor that modify or amend the Contract Documents and/or will potentially result in a cost increase to the Project shall be documented via a written RFI. It is the responsibility of the Contractor, not the Engineer, to submit a written confirming RFI. The Contractor proceeds at his own risk and expense if he performs work that was not documented by a confirming RFI.

1.6 QUALITY ASSURANCE

A. The Contractor, his sub-contractors and materials suppliers warrant that no asbestos related products are used on this project.

B. The Contractor is solely responsible for the quality control and quality assurance of the Work, including placement, workmanship and materials furnished by his subcontractors and suppliers.

C. The Materials Supplier(s) and Contractor are solely responsible for insuring that the constituent materials provided to the project comply with the requirements of this Specification.

D. The Contract Documents are complementary and shall be used in conjunction with each other. Items required by one design discipline shall be as binding as if required by all. Therefore, the contractor must provide copies of the structural <u>and</u> architectural

drawings, and those of any other applicable design discipline, to each of the structural subcontractors prior to Bid. All bids must be based on a review of all of these drawings and not just the structural drawings.

E. The Contractor shall include in his services to the Owner a careful and detailed review of the Contract Documents. The purpose of the review is to identify any "scope gaps" that may exist between the various portions of the Contract Documents. The Contractor shall compare the Contract Documents and shall immediately bring to the SEOR's attention, in writing, any error, omission, or inconsistency that he may discover. All conflicts shall be brought to the architect's attention prior to the commencement of any work.

F. In the event of any conflict among documents, including architectural and structural drawings and specifications, notify the Architect/Engineer prior to submitting proposal. In case of conflict between and/or among the structural drawings and specifications, the strictest interpretation shall govern, unless specified otherwise in writing by the Architect/Engineer.

G. Materials and operations may be tested and inspected by the Owner as work progresses. Failure to detect defective work or material early will not prevent rejection if a defect is discovered later nor shall it obligate the Architect/Engineer for final acceptance. Inspection or testing by others shall in no way relieve the Contractor of his responsibility to perform the Work in accordance with the Contract Documents.

1.7 QUALIFICATIONS

A. The Truss Fabricator shall have a minimum of five (5) years' experience in the manufacturing of wood trusses complying with the WTCA and TPI requirements for production facilities. The fabricator shall operate a plant with an In-Plant WTCA QC certification.

B. The Contractor and Truss Erector shall have a minimum of five (5) years' experience with buildings of at least this size, and the installation of trusses similar in material, design and extent to that indicated for this Project and whose work has resulted in construction with a record of successful service performance.

1.8 MATERIALS DELIVERY, STORAGE, AND HANDLING

A. Keep all wood trusses off the ground. Do not store materials on the structure in a manner that might exceed the allowable loads on or cause distortion or damage to members or supporting structures.

B. Deliver all materials to the site in a manner to ensure the uninterrupted progress of work.

C. Provide all cranes, derricks and hoisting equipment required for the lifting and placement of the truss work. Include all fuel, maintenance, permits and certificates, inspection of the equipment. No crane, derrick, or hoisting equipment shall be operated without a certificate of operation and a certificate of on-site inspection, as required by governing authorities. All hoisting equipment shall be installed, operated

and maintained in accordance with all applicable regulations of authorities having jurisdiction.

1.9 SUBSTITUTIONS AND CHANGES

A. No substitutions, revisions, or any other modifications to the Contract Documents, proposed by the Contractor, shall be made unless the following conditions are met:

1. All substitutions, revisions, or any other modifications are clearly identified as such on the shop drawings via a “cloud” or “box.” Each area so identified must be specifically approved by the Architect/Engineer in writing.
2. There is a substantial cost or schedule advantage to the Owner; or that the proposed revision is necessary to obtain the required materials or methods at the proper times to accomplish the work. In no case shall any revision proposed by the Contractor result in additional cost to the Owner.

B. Cost of Changes

1. The Contractor shall notify the Architect/Engineer in writing if a substitution or change will result in a cost increase to the project within five (5) working days of the date the change is proposed or initiated, regardless of who proposed or initiated the change. The Contractor shall submit to the Architect/Engineer in writing the cost of the substitution or change no later than fifteen (15) working days after the change is proposed or initiated.
2. The Contractor shall not be compensated for any change orders for a substitution or change, regardless of who proposed or initiated the change, where the Architect/Engineer are not notified of the cost of the change in accordance with the above.
3. The Architect/Engineer reserves the right to modify or cancel the substitution or change after their review of the cost information provided by the Contractor.

C. Value Engineering

1. Substitutions, revisions, or any other modifications to the Contract Documents for the purposes of reducing the cost of construction shall be made when requested by The Owner.
2. All such revisions shall include the cost of any re-design that is required of the Architect/Engineer.

1.10 DELEGATED ENGINEERING WORK

A. The structural design of the wood trusses and permanent bracing is hereby delegated to one or more specialty engineers in accordance with the statute(s) of the state in which this project is located. The Delegated Engineer is a professional structural engineer licensed in the state within which this project is permitted. The Delegated Engineer is retained by the General Contractor or Truss Fabricator as cited above.

B. The written engineering requirements for the specialty engineer are contained in this Specification and the structural drawings. It is the Delegated Engineer's responsibility to review the engineering scope of work and requirements set forth in the drawings

and these Specifications. The Delegated Engineer shall timely contact the SEOR for resolution of conflicts, or if any required information is missing or unclear.

C. The Delegated Engineer shall forward delegated engineering documents to the SEOR for review, and these documents shall include, but are not limited to: engineering drawings and design calculations (manual and/or computer printout). All final delegated engineering documents require the impressed seal and signature of the Delegated Engineer. The failure to submit such documents shall in no way waive the requirement to do so or in any way imply that the SEOR has accepted the design responsibility for the applicable component(s).

D. The terms “Truss Engineer” and “Specialty Engineer” shall refer to the specialty engineer to whom the design responsibility of the aforementioned component(s) has been delegated. These terms shall be considered as synonymous with the term “Delegated Engineer”.

1.11 DESIGN

A. All trusses, truss-to-truss connections, truss ply-to-ply connections, and truss field assembly shall be designed by the Truss Engineer. All bracing, both temporary and permanent, and temporary erection supports shall be designed by the Truss Engineer.

B. The trusses shall be designed in accordance with the applicable provisions of the reference standards list in Section 1.3.

C. The trusses shall be designed in accordance with the building code(s) applicable to the jurisdiction in which the project is located.

D. The Truss Engineer shall coordinate the design and layout of the trusses with the following:

1. Ductwork sizes and other horizontal penetrations through the trusses as shown in the MEP drawings.
2. Vertical chases and piping as shown in the MEP drawings.
3. Catwalks and attic spaces as specified by the Architect.

E. The trusses shall be designed to support the design loads as shown in the Contract Documents. At a minimum, these design loads shall include the following:

1. Roof live loads including any snow and drift loads.
2. Floor live loads based on the appropriate occupancy, but not less than the values specified below. Do not take any live load reductions for any individual truss.

a. Residential spaces

(1) Occupied spaces = 40 psf
(2) Partitions = 20 psf
(3) Balconies and corridors = 60 psf

b. Commercial Office

(1) Occupied spaces = 50 psf
(2) Partitions = 20 psf
(3) Balconies and corridors = 80 psf

c. Lobbies, stairs and other assembly areas = 100 psf
d. Balconies serving assembly areas = 100 psf
e. Mechanical, equipment and storage areas = 150 psf

3. Dead Loads

a. Dead loads shall include the following:

(1) Self-weight of truss
(2) Weight of materials fastened directly to truss including, but not limited to, sheathing, gypsum wall boards, insulation, etc.
(3) Actual weight of mechanical equipment, lighting equipment, catwalks, hanging grids, etc. that are supported by the trusses.
(4) Weight of dormers, steeples and all other such “over framing”.
(5) Weight of concrete or clay tiles, topping slabs, sound mats, etc.
(6) Weight of fire sprinklers, rain leaders and all other piping directly supported by the trusses.

b. Dead loads for gravity reactions shall not be less than the following:

(1) Top chord (TCDL) = 10 psf
(2) Bottom chord (BCDL) = 10 psf

4. Wind Loads

a. The trusses shall be designed to withstand wind forces including uplift and internal pressurization. Net uplift forces shall not include any offsetting effects from concrete or clay roof tiles.
b. Wind loads for determining overall truss reactions shall be based on the MWFRS pressures.
c. Wind loads used for designing individual truss components including, but not limited to, chords, webs and truss plates, shall be based on the MWFRS or C&C pressures, whichever is worse.

5. Seismic forces (if any) determined in accordance with ASCE 7.
6. Trusses that support operable partitions (if any) shall be designed for an additional bottom chord superimposed dead load equivalent to 12 psf times the partition wall area. The truss will be designed for both the closed (uniform line load) condition and the open/stacked (concentrated load) condition.
7. Individual top and bottom chords shall be designed to support a concentrated non-concurrent load of 250 pounds applied anywhere along the chord.

F. Trusses at Shear Walls

1. Drag Trusses

a. Drag trusses at the roof are required wherever a wood, masonry or concrete shear wall extends to the underside of the roof truss framing (drag trusses are not required where the shear wall is also an exterior wall). The purpose of the drag truss is to transfer the shear force from the roof diaphragm down to the shear wall below. The design shear force for each shear wall will be provided by the SEOR.
b. Trusses Parallel to Shear Wall

   (1) Center the roof truss on the shear wall
   (2) Fasten the truss bottom chord to the shear wall using connector clips spaced at regular intervals.
   (3) All truss uplift reactions shall be assumed to occur at the bearing walls and not at the shear wall.

c. Trusses Perpendicular to Shear Wall

   (1) Provide a girder roof truss centered on the shear wall, whether shown in the Contract Documents or not.
   (2) Intersecting roof trusses shall frame into and be supported by the girder truss.
   (3) Fasten the truss bottom chord to the shear wall using connector clips spaced at regular intervals.

2. Shear Panel Trusses

   a. Shear panel trusses at each floor are required wherever the floor trusses must pass through a wood shear wall. The purpose of the panel trusses is to transfer the shear force from each floor diaphragm down to the shear wall segment below. The design shear force for each shear wall will be provided by the SEOR.
   b. The framing used in the shear panels shall be the same width as the framing of the shear wall to which they are connected.
   c. Fasten the shear panel truss bottom chord to the shear wall as shown in the structural details.
   d. At a minimum, the shear panel trusses shall be placed uniformily along the full length of each shear wall, at each level, starting at each end of the shear wall segment and working towards the center.

G. POINTS OF BEARING

1. The Truss Engineer shall use only the points of bearing where shown in the structural drawings. The Truss Engineer may submit a request for additional intermediate bearing points if the inclusion of such will result in a lower overall cost to the project, and if the request is made in a timely manner so as not to adversely impact the project. It is imperative that the Contractor retain the Truss Engineer early in the project to determine if additional intermediate bearing points are feasible. The SEOR is in no way obligated to approve the request for additional intermediate bearing points.

2. The Truss Engineer shall design the trusses assuming boundary conditions that do not impart any horizontal thrust reactions to the supporting structure. The primary structure is not designed to withstand horizontal thrust reactions.

H. It is the General Contractor's responsibility to provide the Truss Engineer with copies of the Contract Documents (all disciplines), mechanical equipment cut sheets, ductwork layouts, plumbing riser diagrams, fire sprinkler layouts, elevator submittals, operable partition submittals, etc. so that the Truss Engineer can design the trusses to accommodate these items.

PART 2 - MATERIALS

2.1 LUMBER

A. Lumber used shall be identified by grade mark of a lumber inspection bureau or agency approved by the American Lumber Standards Committee, and shall be the size, species, and grade as shown on the Truss Design Drawings, or equivalent as approved by the Truss Engineer.

B. Moisture content of lumber shall be no less than 7% or greater than 19% at time of manufacturing.

C. Adjustment of value for duration of load or conditions of use shall be in accordance with NDS.

D. Fire retardant treated lumber, if applicable, shall meet the specifications of the fire retardant chemical manufacturer, the truss design and ANSI/TPI 1 and shall be re-dried after treatment in accordance with AWPA Standards C20. Allowable values must be adjusted in accordance with NDS.

2.2 METAL CONNECTOR PLATES

A. Metal connector plates shall be manufactured by a WTCA member plate manufacturer and shall not be less than 0.036 inches in thickness (20 gauge) and shall meet or exceed ASTM A653/A653M Grade 33. Working stresses in steel are to be applied to effectiveness ratios for plates as determined by test and in accordance with ANSI/TPI 1.

B. All connector plates exposed to outside air in their final, in-place condition shall be hot dipped galvanized with a coating that meets or exceeds ASTM A924/924M, coating designation G60. All other connector plates may be the manufacturer's standard finish.

C. Special applied coatings or stainless steel may be required in highly corrosive environments.

2.3 WOOD CONSTRUCTION CONNECTORS

A. The extent of the wood construction connectors (i.e., truss hangers and hurricane ties) are shown in the Contract Documents.

B. All connectors shall be as manufactured by Simpson Strong-Tie (www.strongtie.com). Alternate manufacturers may be used but it is the Contractor's responsibility to submit acceptable documentation that shows the substitute connection is equivalent to or better than the specified Simpson connection.

C. All connectors shall be hot-dipped galvanized.

D. Some connectors may have to be custom ordered by the Contractor. For example, a Simpson "HU210" face mount hanger specified in the Contract Documents that connects to a masonry wall skewed left at 30 degrees must be ordered as "HU210XSKL30". The custom designation is not shown in the Contract Documents.

PART 3 - EXECUTION

3.1 LAYOUT

A. The structural drawings are not layout drawings; the truss positions shown in the structural plans are schematic only. The Truss Fabricator is responsible for producing a layout drawing showing the placement of each individual truss, associated bearing walls, and location of each supporting member (girder truss, LVL beam, etc.).

B. The truss layout drawings shall be signed and sealed by the Truss Engineer and submitted as a shop drawing for review.

3.2 MANUFACTURING

A. Trusses shall be manufactured to meet the quality requirements of ANSI/TPI 1.

B. Trusses shall be fabricated in a properly equipped manufacturing facility of a permanent nature. Trusses shall be manufactured by experienced workmen, using precision cutting, jigging and pressing equipment meeting requirements of ANSI/TPI 1.

C. Truss members shall be accurately cut to length angle and true to line to assure proper fitting joints within tolerances set forth in ANSI/TPI 1, and proper fit with other work.

3.3 HANDLING AND INSTALLING

A. The Truss Erector is solely responsible for the handling, installation, safety and temporary bracing of the trusses. The Truss Erector shall perform his work in a good workmanlike manner and in accordance with the recommendations set forth in BCSI, as indicated above.

B. Trusses shall be handled during manufacturing, delivery and by the Contractor at the job site so as not to be subjected to excessive bending.

C. Trusses shall be transported, unloaded and erected so that they are not subjected to undue lateral forces or deflection (i.e., bending and/or twisting) for which the trusses have not been designed.

D. Trusses shall be protected from damage that might result from on-site activities and environmental conditions. Trusses shall be handled in such a way so as to prevent toppling when banding is removed.

E. The Truss Erector must ensure that proper erection equipment is used (i.e., crane, spreader bars, chains, ropes, cables, temporary supports, etc.) and that the trusses are erected properly.

F. Apparent damage to trusses, if any, shall be reported to the truss fabricator prior to erection.

G. Trusses shall be set and secured level and plumb, and in correct location. Each truss shall be held in correct alignment until specified permanent bracing is installed.

H. Cutting and altering of trusses is not permitted. If any truss should become broken, damaged, or altered, written concurrence and approval by the Truss Engineer is required.

I. Concentrated loads shall not be placed on top of trusses until all specified bracing has been installed and decking is permanently nailed in place. Specifically avoid stacking full bundles of plywood or other concentrated loads on top of trusses.

J. Truss submittals and any supplementary information provided by the Truss Fabricator shall be provided by the Contractor to the individual or organization responsible for the installation of the trusses.

3.4 BRACING

A. Trusses shall be permanently braced in accordance with the requirements as stipulated by the Truss Engineer. Permanent lateral bracing to prevent lateral buckling of individual truss members due to design loads is the responsibility of the Truss Engineer. The Truss Engineer shall specify how the permanent lateral bracing is to be anchored or restrained to prevent lateral movement if all truss members, so braced, buckle together. This shall be accomplished by either:

1. Anchorage to solid end walls
2. Permanent diagonal bracing in the plane of the web members
3. Other suitable means as determined by the Truss Engineer

B. Erection bracing and temporary supports are always required to prevent toppling or dominoing of trusses during installation. The design of the erection bracing and supports is the responsibility of the Truss Erector.

C. Temporary supports shall be installed in locations determined by the Truss Engineer to restrict maximum unsupported temporary spans to no more than 46 feet.

D. The Truss Erector is responsible for the installation of all temporary bracing, permanent bracing, and all required temporary supports. The Truss Erector should always seek the professional advice of the Truss Engineer, and it is also recommended that the Truss Engineer supervise the installation and erection of the trusses.

E. Permanent lateral bracing of walls at gabled ends shall be designed by the SEOR.

3.5 WOOD CONSTRUCTION CONNECTORS

A. Follow all of the connector manufacturer's installation instructions. Fill all holes with fasteners unless noted otherwise in the Structural details.

1. Use only 1-1/2" long nails at all single ply trusses.
2. Stagger double connections to avoid splitting of the wood.

B. All connectors for roof and floor trusses shown in the Contract Documents are schematic only and shall be finalized upon receipt of the truss calculations which show the reactions for each truss. Do not order any connectors until the final truss reactions are provided by the Truss Engineer. The contractor shall carry an appropriate allowance in his bid to cover the cost of the final connectors.

C. A Wood Truss Connector Schedule is provided in the Contract Documents. The schedule shows acceptable connectors that can be used to connect the wood trusses to the primary supporting structure. The Contractor shall pick a suitable connector for each truss using the following procedure:

1. Obtain uplift reaction from the reaction report provided by the Truss Engineer (example: U = 432 lbs). Note that the reactions vary for each support point.
2. Refer to connector schedule and choose a connector where the maximum uplift listed is equivalent to or exceeds the reaction provided by the Truss Engineer.
3. Some connectors may be doubled to provide greater capacity as indicated in the schedule.
4. Note that for large uplift reactions, typically at multiple-ply girder trusses, a custom fabricated girder holddown may be required.
5. All truss-to-truss connectors shall be designated by the Truss Engineer. This includes all valley trusses and piggy-back trusses that are connected to other trusses below.

END OF SECTION 061753

SECTION 062013 - EXTERIOR FINISH CARPENTRY

PART 1 - GENERAL

1.1 SUMMARY

A. Section Includes:
   1. Exterior wood trim.
   2. Exterior cellular PVC trim.

1.2 ACTION SUBMITTALS

A. Product Data: For each type of process and factory-fabricated product.
   1. Include data for wood-preservative treatment from chemical-treatment manufacturer and certification by treating plant that treated materials comply with requirements. Indicate type of preservative used and net amount of preservative retained. Include chemical-treatment manufacturer's written instructions for finishing treated material.
   2. For products receiving a waterborne treatment, include statement that moisture content of treated materials was reduced before shipment to Project site to levels specified.
   3. Include copies of warranties from chemical-treatment manufacturers for each type of treatment.

B. Samples: For each type of product involving selection of colors, profiles, or textures.

1.3 INFORMATIONAL SUBMITTALS

A. Compliance Certificates:
   1. For lumber that is not marked with grade stamp.
   2. For preservative-treated wood that is not marked with treatment-quality mark.

B. Evaluation Reports: For the following, from ICC-ES:
   1. Wood-preservative-treated wood.
   2. Cellular PVC trim.
   3. Foam plastic moldings.

1.4 DELIVERY, STORAGE, AND HANDLING

A. Stack lumber flat with spacers between each bundle to provide air circulation. Protect materials from weather by covering with waterproof sheeting, securely anchored. Provide for air circulation around stacks and under coverings.

1.5 FIELD CONDITIONS

A. Weather Limitations: Proceed with installation only when existing and forecast weather conditions permit work to be performed and at least one coat of specified finish can be applied without exposure to rain, snow, or dampness.

B. Do not install finish carpentry materials that are wet, moisture damaged, or mold damaged.
   1. Indications that materials are wet or moisture damaged include, but are not limited to, discoloration, sagging, or irregular shape.
   2. Indications that materials are mold damaged include, but are not limited to, fuzzy or splotchy surface contamination and discoloration.

1.6 WARRANTY

A. Manufacturer's Warranty for Cellular PVC Trim: Manufacturer agrees to repair or replace trim that fails due to defects in manufacturing within specified warranty period. Failures include, but are not limited to, deterioration, delamination, and excessive swelling from moisture.
   1. Warranty Period: 25 years from date of Substantial Completion.

PART 2 - PRODUCTS

2.1 MATERIALS, GENERAL

A. Lumber: DOC PS 20.
   1. Factory mark each piece of lumber with grade stamp of inspection agency indicating grade, species, moisture content at time of surfacing, and mill.

2.2 WOOD-PRESERVATIVE-TREATED MATERIALS

A. Preservative Treatment by Pressure Process: AWPA U1; Use Category UC3b.
   1. Kiln dry lumber after treatment to a maximum moisture content of 19 percent.
   2. Preservative Chemicals: Acceptable to authorities having jurisdiction and containing no arsenic or chromium.
   3. Do not use material that is warped or does not comply with requirements for untreated material.
   4. Mark lumber with treatment-quality mark of an inspection agency approved by the American Lumber Standard Committee's Board of Review.
   5. Application: Where indicated.

2.3 EXTERIOR TRIM

A. Lumber Trim:
   1. Species and Grade Option: Southern pine, pressure-preservative treated; B & B; SPIB.
   2. Species and Grade Option: Eastern white pine, eastern hemlock-balsam fir-tamarack, eastern spruce, or white woods; D Select (Quality); NeLMA, NLGA, WCLIB, or WWPA.
   3. Maximum Moisture Content: 19 percent.
   4. Face Surface: Surfaced (smooth).

B. Cellular PVC Trim: Extruded, expanded PVC with a small-cell microstructure, recommended by manufacturer for exterior use, made from UV- and heat-stabilized, rigid material.
   1. Basis of Design Product: Fypon Ltd.; Fypon PVC.
   2. Shapes: Brackets, louvers, and other shapes indicated on Drawings.
   3. Density: Not less than 31 lb/cu. ft.
   4. Heat Deflection Temperature: Not less than 130 deg F, according to ASTM D648.
   5. Water Absorption: Not more than 1 percent, according to ASTM D570.
   6. Flame-Spread Index: 75 or less, according to ASTM E84.
   7. Color: Refer to Exterior Finishes Schedule.

2.4 MISCELLANEOUS MATERIALS

A. Fasteners for Exterior Finish Carpentry: Provide nails or screws, in sufficient length to penetrate not less than 1-1/2 inches into wood substrate.
   1. Provide hot-dip galvanized-steel fasteners.

B. Adhesive for Cellular PVC Trim: Product recommended by trim manufacturer.

C. Insect Screening for Soffit Vents: Aluminum, 18-by-16-inch.

PART 3 - EXECUTION

3.1 EXAMINATION

A. Examine substrates, with Installer present, for compliance with requirements for installation tolerances and other conditions affecting performance.

B. Examine finish carpentry materials before installation. Reject materials that are wet, moisture damaged, and mold damaged.

C. Proceed with installation only after unsatisfactory conditions have been corrected.

3.2 PREPARATION

A. Prime lumber and moldings to be painted, including both faces and edges, unless factory primed. Cut to required lengths and prime ends. Comply with requirements in Section 099113 "Exterior Painting."

3.3 INSTALLATION, GENERAL

A. Do not use materials that are unsound, warped, improperly treated or finished, inadequately seasoned, or too small to fabricate with proper jointing arrangements.

   1. Do not use manufactured units with defective surfaces, sizes, or patterns.

B. Install exterior finish carpentry level, plumb, true, and aligned with adjacent materials. Use concealed shims where necessary for alignment.
   1. Scribe and cut exterior finish carpentry to fit adjoining work. Refinish and seal cuts as recommended by manufacturer.
   2. Install to tolerance of 1/8 inch in 96 inches for level and plumb. Install adjoining exterior finish carpentry with 1/32-inch maximum offset for flush installation and 1/16-inch maximum offset for reveal installation.

3.4 STANDING AND RUNNING TRIM INSTALLATION

A. Install flat-grain lumber with bark side exposed to weather.

B. Install cellular PVC trim to comply with manufacturer's written instructions.

C. Install trim with minimum number of joints practical, using full-length pieces from maximum lengths of lumber available. Do not use pieces less than 24 inches long except where necessary.
   1. Use scarf joints for end-to-end joints.
   2. Stagger end joints in adjacent and related members.

D. Fit exterior joints to exclude water. Cope at returns and miter at corners.

3.5 ADJUSTING

A. Replace exterior finish carpentry that is damaged or does not comply with requirements. Exterior finish carpentry may be repaired or refinished if work complies with requirements and shows no evidence of repair or refinishing. Adjust joinery for uniform appearance.

3.6 CLEANING

A. Clean exterior finish carpentry on exposed and semiexposed surfaces. Touch up factory-applied finishes to restore damaged or soiled areas.

3.7 PROTECTION

A. Protect installed products from damage from weather and other causes during construction.

B. Remove and replace finish carpentry materials that are wet, moisture damaged, and mold damaged.

1. Indications that materials are wet or moisture damaged include, but are not limited to, discoloration, sagging, or irregular shape.
2. Indications that materials are mold damaged include, but are not limited to, fuzzy or splotchy surface contamination and discoloration.

END OF SECTION 062013

SECTION 064116 - PLASTIC-LAMINATE-FACED ARCHITECTURAL CABINETS

PART 1 - GENERAL

1.1 SUMMARY

A. Section Includes:
   1. Plastic-laminate-faced architectural cabinets.
   2. Wood furring, blocking, shims, and hanging strips for installing plastic-laminate-faced architectural cabinets unless concealed within other construction before cabinet installation.

1.2 ACTION SUBMITTALS

A. Product Data: For each type of product.

B. Shop Drawings: Show location of each item, dimensioned plans and elevations, large-scale details, attachment devices, and other components.

C. Samples:
   1. Plastic laminates, for each color, pattern, and surface finish.

1.3 INFORMATIONAL SUBMITTALS

A. Woodwork Quality Standard Compliance Certificates: AWI Quality Certification Program certificates.

1.4 QUALITY ASSURANCE

A. Fabricator Qualifications: Certified participant in AWI's Quality Certification Program.

B. Installer Qualifications: Fabricator of products.

1.5 FIELD CONDITIONS

A. Environmental Limitations: Do not deliver or install cabinets until building is enclosed, wet work is complete, and HVAC system is operating and maintaining temperature and relative humidity at occupancy levels during the remainder of the construction period.

PART 2 - PRODUCTS

2.1 PLASTIC-LAMINATE-FACED ARCHITECTURAL CABINETS

A. Quality Standard: Unless otherwise indicated, comply with the "Architectural Woodwork Standards" for grades of architectural plastic-laminate cabinets indicated for construction, finishes, installation, and other requirements.
   1. Provide labels from AWI certification program indicating that woodwork complies with requirements of grades specified.

B. Grade: Premium.

C. Type of Construction: Frameless.

D. Cabinet, Door, and Drawer Front Interface Style: Flush overlay.

E. High-Pressure Decorative Laminate: NEMA LD 3, grades as indicated or if not indicated, as required by woodwork quality standard.
   1. Basis of Design Manufacturer: As scheduled on Drawings.

F. Laminate Cladding for Exposed Surfaces:
   1. Horizontal Surfaces: Grade HGS.
   2. Postformed Surfaces: Grade HGP.
   3. Vertical Surfaces: Grade HGS.
   4. Pattern Direction: As indicated.

G. Materials for Semiexposed Surfaces:
   1. Surfaces Other Than Drawer Bodies: High-pressure decorative laminate, NEMA LD 3, Grade VGS.
   2. Drawer Sides and Backs: Solid-hardwood lumber.
   3. Drawer Bottoms: Hardwood plywood.

H. Colors, Patterns, and Finishes: Provide materials and products that result in colors and textures of exposed laminate surfaces as scheduled on Drawings.

2.2 WOOD MATERIALS

A. Wood Products: Provide materials that comply with requirements of referenced quality standard for each type of woodwork and quality grade specified unless otherwise indicated.
   1. Wood Moisture Content: 8 to 13 percent.

B. Composite Wood and Agrifiber Products: Provide materials that comply with requirements of referenced quality standard for each type of woodwork and quality grade specified unless otherwise indicated.
   1. Medium-Density Fiberboard: ANSI A208.2, Grade 130, made with binder containing no urea formaldehyde.

2. Particleboard: ANSI A208.1, Grade M-2, made with binder containing no urea formaldehyde.
3. Softwood Plywood: DOC PS 1.
4. Veneer-Faced Panel Products (Hardwood Plywood): HPVA HP-1, made with adhesive containing no urea formaldehyde.
5. Thermoset Decorative Panels: Particleboard or medium-density fiberboard finished with thermally fused, melamine-impregnated decorative paper and complying with requirements of NEMA LD 3, Grade VGL, for test methods 3.3, 3.4, 3.6, 3.8, and 3.10.

2.3 CABINET HARDWARE AND ACCESSORIES

A. General: Provide cabinet hardware and accessory materials associated with architectural cabinets except for items specified in Section 087110 "Door Hardware."

B. Frameless Concealed Hinges (European Type): BHMA A156.9, B01602, 135 degrees of opening[, self-closing].

C. Back-Mounted Pulls: BHMA A156.9, B02011.

D. Adjustable Shelf Standards and Supports: BHMA A156.9, B04071; with shelf rests, B04081.

E. Shelf Rests: BHMA A156.9, B04013; metal.

F. Drawer Slides: BHMA A156.9.
1. Grade 1 and Grade 2: Side mounted; full-extension type; zinc-plated steel with polymer rollers.
2. Grade 1HD-100: Side mounted; full-extension type; zinc-plated-steel ball-bearing slides.

G. Door Locks: BHMA A156.11, E07121.

H. Drawer Locks: BHMA A156.11, E07041.

I. Door and Drawer Silencers: BHMA A156.16, L03011.

J. Exposed Hardware Finishes: For exposed hardware, provide scheduled finish that complies with BHMA A156.18 for BHMA finish number indicated.
1. Satin Chromium Plated: BHMA 626 for brass or bronze base; BHMA 652 for steel base.
2. Satin Stainless Steel: BHMA 630.

2.4 MISCELLANEOUS MATERIALS

A. Furring, Blocking, Shims, and Hanging Strips: Fire-retardant-treated softwood lumber, kiln dried to less than 15 percent moisture content.

B. Anchors: Select material, type, size, and finish required for each substrate for secure anchorage. Provide metal expansion sleeves or expansion bolts for post-installed anchors. Use nonferrous-metal or hot-dip galvanized anchors and inserts at inside face of exterior walls and at floors.

C. Adhesives: Do not use adhesives that contain urea formaldehyde.

D. Adhesive for Bonding Plastic Laminate: Unpigmented contact cement.
   1. Adhesive for Bonding Edges: Hot-melt adhesive.

2.5 FABRICATION

A. Complete fabrication, including assembly and hardware application, to maximum extent possible before shipment to Project site. Disassemble components only as necessary for shipment and installation. Where necessary for fitting at site, provide ample allowance for scribing, trimming, and fitting.

B. Shop-cut openings to maximum extent possible to receive hardware, appliances, electrical work, and similar items. Locate openings accurately and use templates or roughing-in diagrams to produce accurately sized and shaped openings. Sand edges of cutouts to remove splinters and burrs.

PART 3 - EXECUTION

3.1 PREPARATION

A. Before installation, condition cabinets to average prevailing humidity conditions in installation areas.

3.2 INSTALLATION

A. Grade: Install cabinets to comply with same grade as item to be installed.

B. Install cabinets level, plumb, true, and straight. Shim as required with concealed shims. Install level and plumb to a tolerance of 1/8 inch in 96 inches.

C. Scribe and cut cabinets to fit adjoining work, refinish cut surfaces, and repair damaged finish at cuts.

D. Anchor cabinets to anchors or blocking built in or directly attached to substrates. Secure with countersunk, concealed fasteners and blind nailing. Use fine finishing nails for exposed fastening, countersunk and filled flush with woodwork.

E. Cabinets: Install without distortion so doors and drawers fit openings properly and are accurately aligned. Adjust hardware to center doors and drawers in openings and to provide unencumbered operation. Complete installation of hardware and accessory items as indicated.
   1. Install cabinets with no more than 1/8 inch in 96-inch sag, bow, or other variation from a straight line.
   2. Fasten wall cabinets through back, near top and bottom, and at ends not more than 16 inches o.c. with No. 10 wafer-head screws sized for not less than 1-1/2-inch penetration into wood framing, blocking, or hanging strips and No. 10 wafer-head sheet metal screws through metal backing or metal framing behind wall finish.

END OF SECTION 064116

SECTION 064600 - WOOD TRIM

PART 1 - GENERAL

1.1 SUMMARY

A. Section Includes:
   1. Interior standing and running trim.
   2. Closet and utility shelving.
   3. Shop priming of wood trim.

1.2 ACTION SUBMITTALS

A. Product Data: For each type of product.

B. Shop Drawings: Show location of each item, dimensioned plans and elevations, large-scale details, attachment devices, and other components.

1.3 DELIVERY, STORAGE, AND HANDLING

A. Do not deliver wood trim until operations that could damage wood trim have been completed in installation areas. If wood trim must be stored in other than installation areas, store only in areas where environmental conditions comply with requirements specified in "Field Conditions" Article.

1.4 FIELD CONDITIONS

A. Environmental Limitations for Interior Work: Do not deliver or install interior wood trim until building is enclosed, wet work is complete, and HVAC system is operating and maintaining temperature and relative humidity at occupancy levels during the remainder of the construction period.

1.5 COORDINATION

A. Coordinate sizes and locations of framing, blocking, furring, reinforcements, and other related units of Work specified in other Sections to ensure that wood trim can be supported and installed as indicated.

PART 2 - PRODUCTS

2.1 INTERIOR STANDING AND RUNNING TRIM FOR OPAQUE FINISH

A. Wood Species: Any closed-grain hardwood.

2.2 CLOSET AND UTILITY SHELVING

A. Shelf Material: 3/4-inch veneer-faced panel product with solid-lumber edge.

B. Closet Rods: As indicated on Drawings.

2.3 WOOD MATERIALS

A. Wood Products: Provide materials that comply with requirements of referenced quality standard for each type of wood trim and quality grade specified unless otherwise indicated.
   1. Wood Moisture Content for Interior Materials: 8 to 13 percent.
   2. Veneer-Faced Panel Products (Hardwood Plywood): HPVA HP-1, made with adhesive containing no urea formaldehyde.

2.4 FABRICATION

A. Fabricate wood trim to dimensions, profiles, and details indicated. Ease edges to radius indicated for the following:
   1. Edges of Solid-Wood (Lumber) Members: 1/16 inch unless otherwise indicated.

B. Backout or groove backs of flat trim members and kerf backs of other wide, flat members except for members with ends exposed in finished work.

C. Assemble casings in shop except where shipping limitations require field assembly.

2.5 SHOP PRIMING

A. Interior Wood Trim for Opaque Finish: Shop prime with one coat of wood primer specified in Section 099123 "Interior Painting."

PART 3 - EXECUTION

3.1 PREPARATION

A. Before installation, condition wood trim to average prevailing humidity conditions in installation areas.

3.2 INSTALLATION

A. Grade: Install wood trim to comply with same grade as item to be installed.

B. Install wood trim level, plumb, true, and straight. Shim as required with concealed shims. Install level and plumb to a tolerance of 1/8 inch in 96 inches.

C. Scribe and cut wood trim to fit adjoining work, refinish cut surfaces, and repair damaged finish at cuts.

D. Use fine finishing nails for exposed fastening, countersunk and filled flush with woodwork.

E. Standing and Running Trim: Install with minimum number of joints possible, using full-length pieces (from maximum length of lumber available) to greatest extent possible. Do not use pieces less than 60 inches long except where shorter single-length pieces are necessary.

3.3 ADJUSTING AND CLEANING

A. Repair damaged and defective wood trim, where possible, to eliminate functional and visual defects; where not possible to repair, replace wood trim. Adjust joinery for uniform appearance.

B. Clean wood trim on exposed and semiexposed surfaces. Touch up shop-applied finishes to restore damaged or soiled areas.

END OF SECTION 064600

SECTION 072100 - THERMAL INSULATION

PART 1 - GENERAL

1.1 SUMMARY

A. Section Includes:
   1. Foam-plastic board insulation.
   2. Glass-fiber blanket insulation.

B. Related Requirements:
   1. Section 072119 "Foamed-in-Place Insulation" for spray polyurethane foam insulation.

1.2 ACTION SUBMITTALS

A. Product Data: For each type of product indicated.

1.3 INFORMATIONAL SUBMITTALS

A. Product Test Reports: Based on evaluation of comprehensive tests performed by a qualified testing agency, for each product.

B. Research/Evaluation Reports: For foam-plastic insulation, from ICC-ES.

1.4 QUALITY ASSURANCE

A. Surface-Burning Characteristics: As determined by testing identical products according to ASTM E 84 by a qualified testing agency. Identify products with appropriate markings of applicable testing agency.

1.5 DELIVERY, STORAGE, AND HANDLING

A. Protect insulation materials from physical damage and from deterioration due to moisture, soiling, and other sources. Store inside and in a dry location. Comply with manufacturer's written instructions for handling, storing, and protecting during installation.

B. Protect foam-plastic board insulation as follows:
   1. Do not expose to sunlight except to necessary extent for period of installation and concealment.
   2. Protect against ignition at all times. Do not deliver foam-plastic board materials to Project site before installation time.
   3. Quickly complete installation and concealment of foam-plastic board insulation in each area of construction.

PART 2 - PRODUCTS

2.1 FOAM-PLASTIC BOARD INSULATION

A. Extruded-Polystyrene Board Insulation: ASTM C578, with maximum flame-spread and smoke-developed indexes of 75 and 450, respectively, per ASTM E84.
   1. Basis of Design Product: Owens Corning; Foamular 150 XPS: Other acceptable manufacturers:
      a. DiversiFoam Products.
      b. Dow Chemical Company.
      c. Pactiv Building Products.
   2. Type X, 15 psi.
   3. R-Value: 5.0 per inch thickness.

2.2 GLASS-FIBER BLANKET INSULATION

A. Manufacturers: One of the following:
   1. CertainTeed Corporation.
   2. Guardian Building Products, Inc.
   3. Johns Manville.
   4. Knauf Insulation.
   5. Owens Corning.

B. Unfaced, Glass-Fiber Blanket Insulation: ASTM C665, Type I; with maximum flame-spread and smoke-developed indexes of 25 and 50, respectively, per ASTM E84; passing ASTM E136 for combustion characteristics.

C. Kraft-Faced, Glass-Fiber Blanket Insulation: ASTM C665, Type II (non-reflective faced), Class C (faced surface not rated for flame propagation); Category 1 (membrane is a vapor barrier).

PART 3 - EXECUTION

3.1 INSTALLATION, GENERAL

A. Comply with insulation manufacturer's written instructions applicable to products and applications indicated.

B. Install insulation that is undamaged, dry, and unsoiled and that has not been left exposed to ice or rain at any time.

C. Extend insulation to envelop entire area to be insulated. Cut and fit tightly around obstructions and fill voids with insulation. Remove projections that interfere with placement.

D. Provide sizes to fit applications indicated and selected from manufacturer's standard thicknesses, widths, and lengths. Apply single layer of insulation units to produce thickness indicated unless multiple layers are otherwise shown or required to make up total thickness.

3.2 INSTALLATION OF INSULATION FOR FRAMED CONSTRUCTION

A. Apply insulation units to substrates by method indicated, complying with manufacturer's written instructions. If no specific method is indicated, bond units to substrate with adhesive or use mechanical anchorage to provide permanent placement and support of units.

B. Foam-Plastic Board Insulation: Seal joints between units by applying adhesive, mastic, or sealant to edges of each unit to form a tight seal as units are shoved into place. Fill voids in completed installation with adhesive, mastic, or sealant as recommended by insulation manufacturer.

C. Glass-Fiber Blanket Insulation: Install in cavities formed by framing members according to the following requirements:
   1. Use insulation widths and lengths that fill the cavities formed by framing members. If more than one length is required to fill the cavities, provide lengths that will produce a snug fit between ends.
   2. Place insulation in cavities formed by framing members to produce a friction fit between edges of insulation and adjoining framing members.
   3. Maintain 3-inch clearance of insulation around recessed lighting fixtures not rated for or protected from contact with insulation.
   4. For wood-framed construction, install blankets according to ASTM C1320 and as follows:
      a. With faced blankets having stapling flanges, lap blanket flange over flange of adjacent blanket to maintain continuity of vapor retarder once finish material is installed over it.
   5. Vapor-Retarder-Faced Blankets: Tape joints and ruptures in vapor-retarder facings, and seal each continuous area of insulation to ensure airtight installation.
      a. Exterior Walls: Set units with facing placed toward exterior of construction.

3.3 INSTALLATION OF INSULATION IN CEILINGS

A. Where glass-fiber blankets are indicated above ceilings, install blanket insulation over entire ceiling area in thicknesses indicated.

3.4 PROTECTION

A. Protect installed insulation from damage due to harmful weather exposures, physical abuse, and other causes. Provide temporary coverings or enclosures where insulation is subject to abuse and cannot be concealed and protected by permanent construction immediately after installation.

END OF SECTION 072100

SECTION 072119 - FOAMED-IN-PLACE INSULATION

PART 1 - GENERAL

1.1 SUMMARY

A. Section Includes:
   1. Closed-cell spray polyurethane foam insulation.
   2. Open-cell spray polyurethane foam insulation.

B. Related Requirements:
   1. Section 072100 "Thermal Insulation" for foam-plastic board insulation.

1.2 ACTION SUBMITTALS

A. Product Data: For each type of product.

1.3 INFORMATIONAL SUBMITTALS

A. Test and Evaluation Reports:
   1. Product Test Reports: For each product, for tests performed by qualified testing agency.
   2. Research Reports: For spray-applied polyurethane foam-plastic insulation, from ICC-ES for applications as a thermal barrier and ignition barrier.
   3. Qualification Statements: For Installer.

1.4 QUALITY ASSURANCE

A. Installer Qualifications: An authorized representative who is trained and approved by manufacturer.

PART 2 - PRODUCTS

2.1 CLOSED-CELL SPRAY POLYURETHANE FOAM INSULATION

A. Closed-Cell Spray Polyurethane Foam: ASTM C1029, Type II, minimum density of 2.0 lb/cu. ft. and minimum aged R-value at 1-inch thickness of 6.9 deg F x h x sq. ft./Btu at 75 deg F.
   1. Basis of Design Product: Carlisle; SealTite Pro Closed Cell.
   2. Basis of Design Product: Carlisle; SealTite Pro One Zero.
   3. Surface-Burning Characteristics: Comply with ASTM E84; testing by a qualified testing agency. Identify products with appropriate markings of applicable testing agency.
      a. Flame-Spread Index: 25 or less.

b. Smoke-Developed Index: 450 or less.

2.2 OPEN-CELL SPRAY POLYURETHANE FOAM INSULATION

A. Open-Cell Spray Polyurethane Foam: Spray-applied polyurethane foam using water as a blowing agent. Minimum density of 0.5 lb/cu. ft. and minimum aged R-value at 1-inch thickness of 3.7 deg F x h x sq. ft./Btu at 75 deg F.
   1. Basis of Design Product: Carlisle; SealTite Pro Open Cell.
   2. Surface-Burning Characteristics: Comply with ASTM E84; testing by a qualified testing agency. Identify products with appropriate markings of applicable testing agency.
      a. Flame-Spread Index: 25 or less.
      b. Smoke-Developed Index: 450 or less.

PART 3 - PERFORMANCE

3.1 PREPARATION

A. Verify that substrates are clean, dry, and free of substances that are harmful to insulation.

3.2 INSTALLATION

A. Comply with insulation manufacturer's written instructions applicable to products and applications.

B. Spray insulation to envelop entire area to be insulated and fill voids.

C. Apply in multiple passes to not exceed maximum thicknesses recommended by manufacturer. Do not spray into rising foam.

D. Framed Construction: Install into cavities formed by framing members to achieve thickness indicated on Drawings.

E. Miscellaneous Voids: Apply according to manufacturer's written instructions.

3.3 PROTECTION

A. Protect installed insulation from damage due to harmful weather exposures, physical abuse, and other causes.

END OF SECTION 072119

SECTION 072500 - WEATHER BARRIERS

PART 1 - GENERAL

1.1 SUMMARY

A. Section Includes:
   1. Building wrap.
   2. Flexible flashing.

1.2 ACTION SUBMITTALS

A. Product Data: For each type of product.
   1. For building wrap, include data on air and water-vapor permeance based on testing according to referenced standards.

1.3 INFORMATIONAL SUBMITTALS

A. Evaluation Reports: For water-resistive barrier and flexible flashing, from ICC-ES.

PART 2 - PRODUCTS

2.1 WATER-RESISTIVE BARRIER

A. Building Wrap: ASTM E1677, Type I air barrier; with flame-spread and smoke-developed indexes of less than 25 and 450, respectively, when tested according to ASTM E84; UV stabilized; and acceptable to authorities having jurisdiction.
   1. Product: One of the following:
      a. DuPont; Tyvek CommercialWrap.
      b. Reemay, Inc.; Typar HouseWrap.
   2. Water-Vapor Permeance: Not less than 50 g through 1 sq. m of surface in 24 hours per ASTM E96/E96M, Desiccant Method (Procedure A).

B. Building-Wrap Tape: Pressure-sensitive plastic tape recommended by building-wrap manufacturer for sealing joints and penetrations in building wrap.

2.2 MISCELLANEOUS MATERIALS

A. Flexible Flashing: Self-adhesive compound, bonded to a high-density polyethylene film, aluminum foil, or spunbonded polyolefin to produce an overall thickness of not less than 0.025 inch.
   1. Product: One of the following:
      a. DuPont ; DuPont Flashing Tape.
      b. GCP Applied Technologies; Vycor Butyl Self Adhered Flashing.

c. Carlisle Coatings & Waterproofing; CCW-705-TWF Thru-Wall Flashing.
d. Fiberweb, Clark Hammerbeam Corp.; Aquaflash 500.
e. Fortifiber Building Systems Group; Fortiflash 25.

PART 3 - EXECUTION

3.1 WATER-RESISTIVE BARRIER INSTALLATION

A. Cover exposed exterior surface of sheathing with water-resistive barrier securely fastened to framing immediately after sheathing is installed.

B. Cover sheathing with water-resistive barrier as follows:
1. Cut back barrier 1/2 inch on each side of the break in supporting members at expansion- or control-joint locations.
2. Apply barrier to cover vertical flashing with a minimum 4-inch overlap unless otherwise indicated.

C. Building Wrap: Comply with manufacturer's written instructions.
1. Seal seams, edges, fasteners, and penetrations with tape.
2. Extend into jambs of openings and seal corners with tape.

3.2 FLEXIBLE FLASHING INSTALLATION

A. Apply flexible flashing where indicated to comply with manufacturer's written instructions.
1. Prime substrates as recommended by flashing manufacturer.
2. Lap seams and junctures with other materials at least 4 inches except that at flashing flanges of other construction, laps need not exceed flange width.
3. Lap flashing over water-resistive barrier at bottom and sides of openings.
4. Lap water-resistive barrier over flashing at heads of openings.
5. After flashing has been applied, roll surfaces with a hard rubber or metal roller to ensure that flashing is completely adhered to substrates.

END OF SECTION 072500

SECTION 072726 - FLUID-APPLIED MEMBRANE AIR BARRIERS

PART 1 - GENERAL

1.1 SUMMARY

A. Section includes fluid-applied, vapor-permeable membrane air barriers.

B. Related Requirements:
1. Section 061600 "Sheathing" for wall sheathings.
2. Section 072500 "Weather Barriers" for weather barriers, including flexible flashing and building wraps with air-barrier properties.

1.2 PREINSTALLATION MEETINGS

A. Preinstallation Conference: Conduct conference at Project site.

1.3 ACTION SUBMITTALS

A. Product Data: For each type of product.
1. Include manufacturer's written instructions for evaluating, preparing, and treating each substrate; technical data; dry film thickness; and tested physical and performance properties of products.

1.4 INFORMATIONAL SUBMITTALS

A. Qualifications Data: For Installer.

B. Product Certificates: From air-barrier manufacturer, certifying compatibility of air barriers and accessory materials with Project materials that connect to or that come in contact with the barrier.

C. Product Test Reports: For each air-barrier assembly, for tests performed by a qualified testing agency.

1.5 QUALITY ASSURANCE

A. Installer Qualifications: An entity that employs installers and supervisors who are trained and approved by manufacturer.

1.6 DELIVERY, STORAGE, AND HANDLING

A. Remove and replace liquid materials that cannot be applied within their stated shelf life.

B. Protect stored materials from direct sunlight.

1.7 FIELD CONDITIONS

A. Environmental Limitations: Apply air barrier within the range of ambient and substrate temperatures recommended in writing by air-barrier manufacturer.
   1. Protect substrates from environmental conditions that affect air-barrier performance.
   2. Do not apply air barrier to a damp or wet substrate or during rain, fog, or mist.

PART 2 - PRODUCTS

2.1 VAPOR-PERMEABLE MEMBRANE AIR-BARRIER

A. Fluid-Applied, Vapor-Permeable Membrane Air Barrier: Synthetic polymer membrane.
   1. Product: One of the following:
      a. Prosoco, Inc.; R-Guard Cat 5.
      b. DuPont; Tyvek Fluid Applied WB+.
      c. GCP Applied Technologies; Grace Perm-A-Barrier VPL 50.
   2. Physical and Performance Properties:
      a. Air Permeance: Maximum 0.004 cfm/sq. ft. of surface area at 1.57-lbf/sq. ft. pressure difference; ASTM E 2178.
      b. Vapor Permeance: Minimum 10 perms; ASTM E 96/E 96M.
      c. Ultimate Elongation: Minimum 200 percent; ASTM D 412, Die C.

2.2 ACCESSORY MATERIALS

A. General: Accessory materials recommended by air-barrier manufacturer to produce a complete air-barrier assembly and compatible with primary air-barrier material.

B. Primer: Liquid waterborne primer recommended for substrate by air-barrier material manufacturer.

PART 3 - EXECUTION

3.1 EXAMINATION

A. Examine substrates, areas, and conditions, with Installer present, for compliance with requirements and other conditions affecting performance of the Work.
   1. Verify that substrates are sound and free of oil, grease, dirt, or other contaminants.
   2. Verify that substrates are visibly dry and free of moisture.

B. Proceed with installation only after unsatisfactory conditions have been corrected.

3.2 INSTALLATION

A. General: Install fluid-applied membrane air-barrier and accessory materials according to air-barrier manufacturer's written instructions to form a seal with adjacent construction and maintain a continuous air barrier.

B. Apply primer to substrates at required rate and allow it to dry. Limit priming to areas that will be covered by fluid air-barrier material on same day. Reprime areas exposed for more than 24 hours.
   1. Prime glass-fiber-surfaced gypsum sheathing with number of prime coats needed to achieve required bond, with adequate drying time between coats.

C. Wall Openings: Prime concealed, perimeter frame surfaces of windows and doors. Apply transitions and flashing for proper coverage.

D. Repair punctures, voids, and deficient lapped seams. Slit and flatten fishmouths and blisters. Extend patches 6 inches beyond repaired areas.

E. Fluid-Applied Membrane Material: Apply a continuous unbroken air-barrier membrane to substrates according to the following thickness. Apply air-barrier membrane in full contact around protrusions such as masonry ties.
   1. Vapor-Permeable Membrane Air Barrier: Total dry film thickness as recommended in writing by manufacturer to meet performance requirements, but not less than 40-mil dry film thickness, applied in one or more equivalent coats.

F. Correct deficiencies in or remove air barrier that does not comply with requirements; repair substrates and reapply air-barrier components.

3.3 CLEANING AND PROTECTION

A. Protect air-barrier system from damage during application and remainder of construction period, according to manufacturer's written instructions.
   1. Protect air barrier from exposure to UV light and harmful weather exposure as recommended in writing by manufacturer. If exposed to these conditions for longer than recommended, remove and replace air barrier or install additional, full-thickness, air-barrier application after repairing and preparing the overexposed materials according to air-barrier manufacturer's written instructions.
   2. Protect air barrier from contact with incompatible materials and sealants not approved by air-barrier manufacturer.

B. Clean spills, stains, and soiling from construction that would be exposed in the completed work using cleaning agents and procedures recommended in writing by manufacturer of affected construction.

C. Remove masking materials after installation.

END OF SECTION 072726

SECTION 073113 - ASPHALT SHINGLES

PART 1 - GENERAL

1.1 SUMMARY

A. Section Includes:
   1. Asphalt shingles.
   2. Underlayment.

1.2 ACTION SUBMITTALS

A. Product Data: For each type of product indicated.

B. Samples: For each exposed product and for each color and blend specified.

1.3 INFORMATIONAL SUBMITTALS

A. Product test reports.

B. Research/evaluation reports.

C. Warranties: Sample of special warranties.

1.4 CLOSEOUT SUBMITTALS

A. Maintenance data.

1.5 QUALITY ASSURANCE

A. Fire-Resistance Characteristics: Where indicated, provide asphalt shingles and related roofing materials identical to those of assemblies tested for fire resistance per test method below by UL or another testing and inspecting agency acceptable to authorities having jurisdiction. Identify products with appropriate markings of applicable testing agency.
   1. Exterior Fire-Test Exposure: Class A; ASTM E108 or UL 790, for application and roof slopes indicated.

B. Preinstallation Conference: Conduct conference at Project site.

1.6 WARRANTY

A. Materials Warranty: Manufacturer agrees to repair or replace asphalt shingles that fail within specified warranty period.

1. Failures include, but are not limited to, the following:
   a. Manufacturing defects.
2. Materials Warranty Period: 30 years from date of Substantial Completion, prorated, with first five years nonprorated.
3. Wind-Speed Warranty Period: Asphalt shingles will resist blow-off or damage caused by wind speeds of up to 130 mph for five years from date of Substantial Completion.
4. Algae-Resistance Warranty Period: Asphalt shingles will not discolor for five years from date of Substantial Completion.
5. Workmanship Warranty Period: Two years from date of Substantial Completion.

B. Roofing Installer's Warranty: On warranty form at end of this Section, signed by Installer, in which Installer agrees to repair or replace components of asphalt shingle roofing that fail in materials or workmanship within specified warranty period.
   1. Warranty Period: Two years from date of Substantial Completion.

PART 2 - PRODUCTS

2.1 PERFORMANCE REQUIREMENTS

A. Exterior Fire-Test Exposure: Provide asphalt shingles and related roofing materials identical to those of assemblies tested for Class A fire resistance in accordance with ASTM E108 or UL 790 by Underwriters Laboratories or another testing and inspecting agency acceptable to authorities having jurisdiction. Identify products with appropriate markings of applicable testing agency.

B. Wind Resistance: Provide asphalt shingles that comply with requirements of ASTM D3161/D3161M, Class F, and with ASTM D7158/D7158M, Class H.

2.2 GLASS-FIBER-REINFORCED ASPHALT SHINGLES

A. Laminated-Strip Asphalt Shingles: ASTM D3462, laminated, multi-ply overlay construction, glass-fiber reinforced, mineral-granule surfaced, and self-sealing.
   1. Basis-of-Design Product: CertainTeed Corporation; Landmark.
   2. Butt Edge: Straight cut.
   3. Strip Size: Manufacturer's standard.
   4. Algae Resistance: Granules treated to resist algae discoloration.
   5. Color and Blends: As scheduled on Drawings.

B. Hip and Ridge Shingles: Manufacturer's standard units to match asphalt shingles.

2.3 UNDERLAYMENT MATERIALS

A. Self-Adhering Sheet Underlayment, High Temperature: Minimum of 40-mil thick; with slip-resisting, polymer-film-reinforced or glass-reinforced top surface laminated to layer of butyl or SBS-modified asphalt adhesive; with release backing; cold applied; and evaluated and documented to be suitable for use for intended purpose under applicable codes by a testing and inspecting agency acceptable to authorities having jurisdiction.
   1. Basis of Design Product: CertainTeed Corporation; WinterGuard HT.
   2. Thermal Stability: Stable after testing at 240 deg F; ASTM D1970/D1970M.
   3. Low-Temperature Flexibility: Passes after testing at minus 20 deg F; ASTM D1970/D1979M.

2.4 RIDGE VENTS

A. Rigid Ridge Vent: Manufacturer's standard, rigid section high-density polypropylene or other UV-stabilized plastic ridge vent with nonwoven geotextile filter strips and external deflector baffles; for use under ridge shingles.
   1. Acceptable Manufacturers:
      a. Air Vent, Inc.;
      b. Cor-A-Vent, Inc.
      c. Lomanco, Inc.
      d. Obdyke, Benjamin Incorporated.

2.5 ACCESSORIES

A. Asphalt Roofing Cement: ASTM D4586/D4586M, Type II, asbestos free.

B. Roofing Nails: ASTM F1667; aluminum, stainless-steel, copper, or hot-dip galvanized-steel wire shingle nails, minimum 0.120-inch diameter, barbed shank, sharp-pointed, with a minimum 3/8-inch diameter flat head and of sufficient length to extend at least 1/8 inch through plywood sheathing.
   1. Where nails are in contact with metal flashing, use nails made from same metal as flashing.

2.6 METAL FLASHING AND TRIM

A. Sheet Metal: Aluminum, mill finished.

B. Fabricate sheet metal flashing and trim to comply with recommendations in SMACNA's "Architectural Sheet Metal Manual" that apply to design, dimensions, metal, and other characteristics of the item.

PART 3 - EXECUTION

3.1 EXAMINATION

A. Examine substrates, areas, and conditions, with Installer present, for compliance with requirements for installation tolerances and other conditions affecting performance of the Work.
   1. Examine roof sheathing to verify that sheathing joints are supported by framing and blocking or metal clips and that installation is within flatness tolerances.
   2. Verify that substrate is sound, dry, smooth, clean, sloped for drainage, and completely anchored and that provisions have been made for flashings and penetrations through asphalt shingles.
   3. Verify that vent stacks and other penetrations through roofing are installed and securely fastened.

B. Prepare written report, endorsed by Installer, listing conditions detrimental to performance of the Work.

C. Proceed with installation only after unsatisfactory conditions have been corrected.

3.2 UNDERLAYMENT INSTALLATION

A. General: Comply with asphalt shingle and underlayment manufacturers' written installation instructions and with recommendations in NRCA's "The NRCA Roofing Manual: Steep-Slope Roof "Systems" applicable to products and applications indicated unless more stringent requirements are specified in this Section or indicated on Drawings.

B. Self-Adhering Sheet Underlayment: Install, wrinkle free, on roof deck. Comply with low-temperature installation restrictions of underlayment manufacturer if applicable. Install at locations indicated, lapped in direction to shed water. Lap sides not less than 3-1/2 inches. Lap ends not less than 6 inches staggered 24 inches between courses. Roll laps with roller. Cover underlayment within seven days.

3.3 METAL FLASHING INSTALLATION

A. General: Install metal flashings according to recommendations in ARMA's "Residential Asphalt Roofing Manual" and asphalt shingle recommendations in NRCA's "The NRCA Roofing and Waterproofing Manual."

3.4 ASPHALT SHINGLE INSTALLATION

A. General: Install asphalt shingles according to manufacturer's written instructions, recommendations in ARMA's "Residential Asphalt Roofing Manual," and asphalt shingle recommendations in NRCA's "NRCA Guidelines for Asphalt Shingle Roof Systems."

B. Install starter strip along lowest roof edge, consisting of an asphalt shingle strip with tabs removed with self-sealing strip face up at roof edge.
   1. Extend asphalt shingles 1/2 inch over fasciae at eaves and rakes.
   2. Install starter strip along rake edge.

C. Install first and remaining courses of asphalt shingles stair-stepping diagonally across roof deck with manufacturer's recommended offset pattern at succeeding courses, maintaining uniform exposure.

D. Fasten asphalt shingle strips with a minimum of six roofing nails, but not less than the number indicated in manufacturer's written instructions for roof slope and design wind speed indicated and for warranty requirements specified in this Section.
   1. When ambient temperature during installation is below 50 deg F, seal asphalt shingles with asphalt roofing cement spots.

E. Closed-Cut Valleys: Extend asphalt shingle strips from one side of valley 12 inches beyond center of valley. Use one-piece shingle strips without joints in valley. Fasten with extra nail in upper end of shingle. Install asphalt shingle courses from other side of valley and cut back to a straight line 2 inches short of valley centerline. Trim upper concealed corners of cut-back shingle strips.
   1. Do not nail asphalt shingles within 6 inches of valley center.
   2. Set trimmed, concealed-corner asphalt shingles in a 3-inch wide bed of asphalt roofing cement.

F. Ridge Vents: Install continuous ridge vents over asphalt shingles according to manufacturer's written instructions. Fasten with roofing nails of sufficient length to penetrate sheathing.

G. Ridge and Hip Cap Shingles: Maintain same exposure of cap shingles as roofing shingle exposure. Lap cap shingles at ridges to shed water away from direction of prevailing winds. Fasten with roofing nails of sufficient length to penetrate sheathing.
   1. Fasten ridge cap asphalt shingles to cover ridge vent without obstructing airflow.

END OF SECTION 073113

SECTION 074646 - FIBER-CEMENT SIDING

PART 1 - GENERAL

1.1 SUMMARY

A. Section includes fiber-cement siding and soffit.

1.2 COORDINATION

A. Coordinate siding installation with flashings and other adjoining construction to ensure proper sequencing.

1.3 ACTION SUBMITTALS

A. Product Data: For each type of product.

B. Samples for Verification: For each type, color, texture, and pattern required.
   1. 12-inch long-by-actual-width Sample of siding.

1.4 INFORMATIONAL SUBMITTALS

A. Product Certificates: For each type of fiber-cement siding and soffit.

B. Product Test Reports: Based on evaluation of comprehensive tests performed by a qualified testing agency, for fiber-cement siding.

C. Research/Evaluation Reports: For each type of fiber-cement siding required, from ICC-ES.

D. Sample Warranty: For special warranty.

1.5 MAINTENANCE MATERIAL SUBMITTALS

A. Furnish extra materials that match products installed and that are packaged with protective covering for storage and identified with labels describing contents.
   1. Furnish full lengths of fiber-cement siding and soffit including related accessories, in a quantity equivalent to 5 percent of amount installed.

1.6 QUALITY ASSURANCE

A. Mockups: Build mockups to verify selections made under Sample submittals and to demonstrate aesthetic effects and to set quality standards for fabrication and installation.

1. Build mockup of typical wall area as shown on Drawings.
2. Build mockups for fiber-cement siding and soffit including accessories.
   a. Size: As determined by Architect.
3. Approved mockups may become part of the completed Work if undisturbed at time of Substantial Completion.

1.7 DELIVERY, STORAGE, AND HANDLING

A. Deliver and store packaged materials in original containers with labels intact until time of use.

B. Store materials on elevated platforms, under cover, and in a dry location.

1.8 WARRANTY

A. Special Warranty: Manufacturer agrees to repair or replace products that fail in materials or workmanship within specified warranty period.
   1. Failures include, but are not limited to, the following:
      a. Structural failures including cracking and deforming.
      b. Deterioration of materials beyond normal weathering.
   2. Warranty Period: 25 years from date of Substantial Completion.

PART 2 - PRODUCTS

2.1 FIBER-CEMENT SIDING

A. General: ASTM C1186, Type A, Grade II, fiber-cement board, noncombustible when tested according to ASTM E136; with a flame-spread index of 25 or less when tested according to ASTM E84.

B. Basis of Design Products: Provide the following products by James Hardie:
   1. Select Cedarmill HZ10 Hardie Plank lap siding.
   2. Staggered Edge Panel HZ10 Hardie Shingle siding.
   3. Hardie Trim for trim components.
   4. Hardie Soffit Panel soffits.

C. Labeling: Provide fiber-cement siding that is tested and labeled according to ASTM C186 by a qualified testing agency acceptable to authorities having jurisdiction.

D. Lap Siding: 8-1/4 inches wide with 7 inch exposure. 0.312 thickness. 12 foot lengths.

E. Shingle Siding: 15-1/4 inches wide with 6 inch exposure. 0.25 inch thickness. 48 inch lengths.

F. Colors and Textures: As scheduled on Drawings.

2.2 FIBER-CEMENT SOFFIT

A. General: ASTM C1186, Type A, Grade II, fiber-cement board, noncombustible when tested according to ASTM E136; with a flame-spread index of 25 or less when tested according to ASTM E84.

B. Nominal Thickness: Not less than 5/16 inch.

C. Ventilation: Provide perforated soffit.

2.3 ACCESSORIES

A. Siding Accessories, General: Provide starter strips, edge trim, outside and inside corner caps, and other items as recommended by siding manufacturer for building configuration.
   1. Provide accessories matching color and texture of adjacent siding.

B. Decorative Accessories: Provide fiber-cement decorative accessories as indicated, including trim and fascia elements.

C. Flashing: Provide siliconized polyester coated aluminum flashing at window and door heads and where indicated.

D. Fasteners:
   1. For fastening to wood, use siding nails or ribbed bugle-head screws of sufficient length to penetrate a minimum of 1 inch into substrate.
   2. For fastening fiber cement, use hot-dip galvanized fasteners.

PART 3 - EXECUTION

3.1 EXAMINATION

A. Examine substrates for compliance with requirements for installation tolerances and other conditions affecting performance of fiber-cement siding and soffit and related accessories.

B. Proceed with installation only after unsatisfactory conditions have been corrected.

3.2 PREPARATION

A. Clean substrates of projections and substances detrimental to application.

3.3 INSTALLATION

A. General: Comply with manufacturer's written installation instructions applicable to products and applications indicated.

1. Do not install damaged components.
2. Install fasteners no more than 24 inches o.c.

B. Install joint sealants as specified in Section 079200 "Joint Sealants" and to produce a weathertight installation.

3.4 ADJUSTING AND CLEANING

A. Remove damaged, improperly installed, or otherwise defective materials and replace with new materials complying with specified requirements.

B. Clean finished surfaces according to manufacturer's written instructions and maintain in a clean condition during construction.

END OF SECTION 074646

SECTION 078413 - PENETRATION FIRESTOPPING

PART 1 - GENERAL

1.1 SUMMARY

A. Section Includes:
   1. Penetrations in fire-resistance-rated walls.

1.2 ACTION SUBMITTALS

A. Product Data: For each type of product indicated.

1.3 INFORMATIONAL SUBMITTALS

A. Installer Certificates: From Installer indicating penetration firestopping has been installed in compliance with requirements and manufacturer's written recommendations.

B. Product test reports.

1.4 QUALITY ASSURANCE

A. Installer Qualifications: A firm that has been approved by FM Global according to FM Global 4991, "Approval of Firestop Contractors," or been evaluated by UL and found to comply with its "Qualified Firestop Contractor Program Requirements."

B. Fire-Test-Response Characteristics: Penetration firestopping shall comply with the following requirements:
   1. Penetration firestopping tests are performed by UL, Intertek ETL SEMKO, or FM Global.
   2. Penetration firestopping is identical to those tested per testing standard referenced in "Penetration Firestopping" Article. Provide rated systems bearing marking of qualified testing and inspection agency.

C. Preinstallation Conference: Conduct conference at Project site.

PART 2 - PRODUCTS

2.1 MANUFACTURERS

A. Manufacturers: Provide products by one of the following:
   1. A/D Fire Protection Systems Inc.
   2. GCP Applied Technologies.

3. Hilti, Inc.
4. Johns Manville.
5. Nelson Firestop Products.
6. NUCO Inc.
7. Passive Fire Protection Partners.
8. RectorSeal Corporation.
9. Specified Technologies Inc.
10. 3M Fire Protection Products.
11. Tremco, Inc.; Tremco Fire Protection Systems Group.
12. USG Corporation.

2.2 PENETRATION FIRESTOPPING

A. Provide penetration firestopping that is produced and installed to resist spread of fire according to requirements indicated, resist passage of smoke and other gases, and maintain original fire-resistance rating of construction penetrated. Penetration firestopping systems shall be compatible with one another, with the substrates forming openings, and with penetrating items if any.

B. Penetrations in Fire-Resistance-Rated Walls: Ratings determined per ASTM E 814 or UL 1479, based on testing at a positive pressure differential of 0.01-inch wg.
   1. F-Rating: Not less than the fire-resistance rating of constructions penetrated.

C. Exposed Penetration Firestopping: Provide products with flame-spread and smoke-developed indexes of less than 25 and 450, respectively, as determined per ASTM E 84.

D. Accessories: Provide components for each penetration firestopping system that are needed to install fill materials and to maintain ratings required. Use only those components specified by penetration firestopping manufacturer and approved by qualified testing and inspecting agency for firestopping indicated.

PART 3 - EXECUTION

3.1 INSTALLATION

A. Examine substrates and conditions, with Installer present, for compliance with requirements for opening configurations, penetrating items, substrates, and other conditions affecting performance of the Work.

B. Install penetration firestopping to comply with manufacturer's written installation instructions and published drawings for products and applications indicated.

C. Install forming materials and other accessories of types required to support fill materials during their application and in the position needed to produce cross-sectional shapes and depths required to achieve fire ratings indicated.

1. After installing fill materials and allowing them to fully cure, remove combustible forming materials and other accessories not indicated as permanent components of firestopping.

D. Install fill materials for firestopping by proven techniques to produce the following results:
   1. Fill voids and cavities formed by openings, forming materials, accessories, and penetrating items as required to achieve fire-resistance ratings indicated.
   2. Apply materials so they contact and adhere to substrates formed by openings and penetrating items.
   3. For fill materials that will remain exposed after completing the Work, finish to produce smooth, uniform surfaces that are flush with adjoining finishes.

3.2 IDENTIFICATION

A. Identify penetration firestopping with preprinted metal or plastic labels. Attach labels permanently to surfaces adjacent to and within 6 inches of firestopping edge so labels will be visible to anyone seeking to remove penetrating items or firestopping. Use mechanical fasteners or self-adhering-type labels with adhesives capable of permanently bonding labels to surfaces on which labels are placed. Include the following information on labels:
   1. The words "Warning - Penetration Firestopping - Do Not Disturb. Notify Building Management of Any Damage."
   2. Contractor's name, address, and phone number.
   3. Designation of applicable testing and inspecting agency.
   4. Date of installation.
   5. Manufacturer's name.
   6. Installer's name.

END OF SECTION 078413

SECTION 079200 - JOINT SEALANTS

PART 1 - GENERAL

1.1 SUMMARY

A. Section Includes:
1. Silicone joint sealants.
2. Urethane joint sealants.
3. Latex joint sealants.
4. Acoustical joint sealants.

1.2 ACTION SUBMITTALS

A. Product Data: For each joint-sealant product indicated.

B. Samples for Verification: For each type and color of joint sealant required, provide Samples with joint sealants in 1/2-inch wide joints formed between two 6-inch long strips of material matching the appearance of exposed surfaces adjacent to joint sealants.

C. Joint-Sealant Schedule: Include the following information:
1. Joint-sealant application, joint location, and designation.
2. Joint-sealant manufacturer and product name.
3. Joint-sealant formulation.
4. Joint-sealant color.

1.3 INFORMATIONAL SUBMITTALS

A. Product test reports.

B. Warranties.

1.4 CLOSEOUT SUBMITTALS

A. Manufacturers' special warranties.

B. Installer's special warranties.

1.5 QUALITY ASSURANCE

A. Installer Qualifications: Authorized representative who is trained and approved by manufacturer.

1.6 FIELD CONDITIONS

A. Do not proceed with installation of joint sealants under the following conditions:
   1. When ambient and substrate temperature conditions are outside limits permitted by joint-sealant manufacturer[or are below 40 deg F.
   2. When joint substrates are wet.
   3. Where joint widths are less than those allowed by joint-sealant manufacturer for applications indicated.
   4. Where contaminants capable of interfering with adhesion have not yet been removed from joint substrates.

1.7 WARRANTY

A. Special Installer's Warranty: Manufacturer's standard form in which Installer agrees to repair or replace joint sealants that do not comply with performance and other requirements specified in this Section within specified warranty period.
   1. Warranty Period: Two years from date of Substantial Completion.

B. Special Manufacturer's Warranty: Manufacturer's standard form in which joint-sealant manufacturer agrees to furnish joint sealants to repair or replace those that do not comply with performance and other requirements specified in this Section within specified warranty period.
   1. Warranty Period: 10 years from date of Substantial Completion.

C. Special warranties specified in this article exclude deterioration or failure of joint sealants from the following:
   1. Movement of the structure caused by stresses on the sealant exceeding sealant manufacturer's written specifications for sealant elongation and compression.
   2. Disintegration of joint substrates from causes exceeding design specifications.
   3. Mechanical damage caused by individuals, tools, or other outside agents.
   4. Changes in sealant appearance caused by accumulation of dirt or other atmospheric contaminants.

PART 2 - PRODUCTS

A. Compatibility: Provide joint sealants, backings, and other related materials that are compatible with one another and with joint substrates under conditions of service and application, as demonstrated by joint-sealant manufacturer, based on testing and field experience.

B. Colors of Exposed Joint Sealants: As scheduled on Drawings or as selected by Architect from manufacturer's full range.

2.2 SILICONE JOINT SEALANTS

A. Mildew-Resistant Acid-Curing Silicone Joint Sealant: ASTM C920, Type S, Grade NS, Class 25, Use NT.

1. Product: One of the following:
   a. Dow Chemical Company; DOWSIL 786 Mildew Resistant.
   b. GE Silicones; Sanitary SCS 1700.
   c. Tremco Incorporated; Tremsil 200 White.
2. Type: Single component (S).
3. Grade: Nonsag (NS).
4. Class: 25.
5. Uses Related to Exposure: Nontraffic (NT).

2.3 URETHANE JOINT SEALANTS

A. Urethane Joint Sealant: ASTM C920.
   1. Product: One of the following:
      a. Pecora Corporation; Dynatrol II.
      b. Tremco Incorporated; Dymeric 240FC.
   2. Type: Multicomponent (M).
   3. Grade: Nonsag (NS).
   4. Class: 50.
   5. Uses Related to Exposure: Nontraffic (NT).

2.4 LATEX JOINT SEALANTS

A. Latex Joint Sealant: Acrylic latex or siliconized acrylic latex, ASTM C834, Type OP, Grade NF.
   1. Product: One of the following:
      a. BASF: Sonolac.
      b. Pecora Corporation; AC-20+.
      c. Tremco Incorporated; Tremflex 834.

2.5 ACOUSTICAL JOINT SEALANTS

A. Acoustical Joint Sealant: Manufacturer's standard nonsag, paintable, nonstaining latex sealant complying with ASTM C834. Product effectively reduces airborne sound transmission through perimeter joints and openings in building construction as demonstrated by testing representative assemblies according to ASTM E90.
   1. Product: One of the following:
      a. Pecora Corporation; AC-20 FTR Acoustical and Insulation Sealant.
      b. Tremco Incorporated; Tremco Acoustical Sealant. .
      c. USG Corporation; SHEETROCK Acoustical Sealant.

2.6 JOINT SEALANT BACKING

A. Cylindrical Sealant Backings: ASTM C1330, Type C (closed-cell material with a surface skin), and of size and density to control sealant depth and otherwise contribute to producing optimum sealant performance.

B. Bond-Breaker Tape: Polyethylene tape or other plastic tape recommended by sealant manufacturer.

2.7 MISCELLANEOUS MATERIALS

A. Primer: Material recommended by joint-sealant manufacturer where required for adhesion of sealant to joint substrates indicated, as determined from preconstruction joint-sealant-substrate tests and field tests.

B. Cleaners for Nonporous Surfaces: Chemical cleaners acceptable to manufacturers of sealants and sealant backing materials.

C. Masking Tape: Nonstaining, nonabsorbent material compatible with joint sealants and surfaces adjacent to joints.

PART 3 - EXECUTION

3.1 EXAMINATION

A. Examine joints indicated to receive joint sealants, with Installer present, for compliance with requirements for joint configuration, installation tolerances, and other conditions affecting performance of the Work.

B. Proceed with installation only after unsatisfactory conditions have been corrected.

3.2 PREPARATION

A. Surface Cleaning of Joints: Clean out joints immediately before installing joint sealants to comply with joint-sealant manufacturer's written instructions.

B. Joint Priming: Prime joint substrates where recommended by joint-sealant manufacturer or as indicated by preconstruction joint-sealant-substrate tests or prior experience. Apply primer to comply with joint-sealant manufacturer's written instructions. Confine primers to areas of joint-sealant bond; do not allow spillage or migration onto adjoining surfaces.

C. Masking Tape: Use masking tape where required to prevent contact of sealant or primer with adjoining surfaces that otherwise would be permanently stained or damaged by such contact or by cleaning methods required to remove sealant smears. Remove tape immediately after tooling without disturbing joint seal.

3.3 INSTALLATION

A. General: Comply with joint sealant manufacturer’s written installation instructions for products and applications indicated, unless more stringent requirements apply.

B. Sealant Installation Standard: Comply with recommendations in ASTM C1193 for use of joint sealants as applicable to materials, applications, and conditions indicated.

C. Install sealant backings of type indicated to support sealants during application and at position required to produce cross-sectional shapes and depths of installed sealants relative to joint widths that allow optimum sealant movement capability.
   1. Do not leave gaps between ends of sealant backings.
   2. Do not stretch, twist, puncture, or tear sealant backings.

D. Install bond-breaker tape behind sealants where sealant backings are not used between sealants and backs of joints.

E. Install sealants using proven techniques that comply with the following and at the same time backings are installed:
   1. Place sealants so they directly contact and fully wet joint substrates.
   2. Completely fill recesses in each joint configuration.
   3. Produce uniform, cross-sectional shapes and depths relative to joint widths that allow optimum sealant movement capability.

F. Tooling of Nonsag Sealants: Immediately after sealant application and before skinning or curing begins, tool sealants to form smooth, uniform beads of configuration indicated; to eliminate air pockets; and to ensure contact and adhesion of sealant with sides of joint.
   1. Remove excess sealant from surfaces adjacent to joints.
   2. Use tooling agents that are approved in writing by sealant manufacturer and that do not discolor sealants or adjacent surfaces.
   3. Provide concave joint profile.

G. Acoustical Sealant Installation: Comply with ASTM C919 and with manufacturer's written recommendations.

H. Clean off excess sealant or sealant smears adjacent to joints as the Work progresses by methods and with cleaning materials approved in writing by manufacturers of joint sealants and of products in which joints occur.

3.4 JOINT-SEALANT SCHEDULE

A. Joint-Sealant Application: Exterior joints in vertical surfaces and horizontal nontraffic surfaces.
   1. Sealant Type: Urethane.
   2. Joint-Sealant Color: As scheduled or selected.

B. Joint-Sealant Application: Interior joints in vertical surfaces and horizontal nontraffic surfaces:
   1. Sealant Type: Latex.
   2. Joint-Sealant Color: As scheduled or selected.

C. Joint-Sealant Application: Mildew-resistant interior joints in vertical surfaces and horizontal nontraffic surfaces.
   1. Sealant Type: Silicone.
   2. Joint-Sealant Color: As scheduled or selected.

D. Joint-Sealant Application: Interior acoustical joints in vertical surfaces and horizontal nontraffic surfaces
   1. Sealant Type: Acoustical.
   2. Joint-Sealant Color: As scheduled or selected.

END OF SECTION 079200

SECTION 081113 - HOLLOW METAL DOORS AND FRAMES

PART 1 - GENERAL

1.1 SUMMARY

A. Section includes exterior prefinished steel entry doors.

1.2 ACTION SUBMITTALS

A. Product Data: For each type of product.

B. Shop Drawings: Include elevations, door edge details, frame profiles, metal thicknesses, preparations for hardware, and other details.

C. Samples for Verification: For each type of exposed finish required.

D. Schedule: Prepared by or under the supervision of supplier, using same reference numbers for details and openings as those on Drawings.

1.3 INFORMATIONAL SUBMITTALS

A. Product test reports.

1.4 PERFORMANCE CRITERIA

A. Water Penetration: Tested per ASTM E331.

B. Air Infiltration: Tested per ASTM E283.

1.5 DELIVERY, STORAGE, AND HANDLING

A. Deliver hollow-metal doors and frames palletized, packaged, or crated to provide protection during transit and Project-site storage. Do not use nonvented plastic.
   1. Provide additional protection to prevent damage to factory-finished units.

B. Store hollow-metal doors and frames vertically under cover at Project site with head up. Place on minimum 4-inch high wood blocking. Provide minimum 1/4-inch space between each stacked door to permit air circulation.

PART 2 - PRODUCTS

2.1 MANUFACTURERS

A. Basis of Design Product: Masonite International; Sta-Tru HD Wood-Edge Prefinished Steel Entry Doors.

2.2 EXTERIOR HOLLOW-METAL DOORS AND FRAMES

A. Description: 1-3/4 inch thick side-hinged door system. Components include door panels, glass inserts, transom, door frame, hinges, and weather seals.

B. Door Panel: 0.0215 inch thick hot-dipped galvanized steel facings with manufacturer's standard coating finish. Fingerjointed wood lock and hinge stiles and top rail. Composite bottom rail. Reinforced lock areas. Insulated core utilizing polyurethane foam.

C. Glass Insert: Manufacturer's standard insulating glass assembly.

D. Door Frame: Wood frame, machined to receive door hardware.

E. Hardware:
   1. Threshold: Low-profile handicap accessible.
   2. Hinges: Standard weight full mortise 4 inch butt hinges. Three per door.
   3. Weather Seal: Vinyl-wrapped foam-filled compression design. Sealed door bottom sweep.

PART 3 - EXECUTION

3.1 INSTALLATION

A. General: Comply with manufacturer's written installation instructions and approved shop drawings.
   1. Set frames accurately in position; plumbed, and aligned.
   2. Doors: Fit hollow-metal doors accurately in frames, within clearances recommended by SDI.

3.2 ADJUSTING AND CLEANING

A. Final Adjustments: Check and readjust operating hardware items immediately before final inspection. Leave work in complete and proper operating condition. Remove and replace defective work, including hollow-metal work that is warped, bowed, or otherwise unacceptable.

END OF SECTION 081113

SECTION 081416 - FLUSH WOOD DOORS

PART 1 - GENERAL

1.1 SUMMARY

A. Section Includes:
   1. Hollow-core flush wood doors for opaque finish.

B. Related Requirements:
   1. Section 099123 "Interior Painting" for field finishing hollow-core doors.

1.2 PREINSTALLATION MEETINGS

A. Preinstallation Conference: Conduct conference at Project site.

1.3 ACTION SUBMITTALS

A. Product Data: For each type of product.

B. Shop Drawings: Indicate location, size, and hand of each door; elevation of each type of door; construction details not covered in Product Data, and the following:
   1. Dimensions and locations of blocking for hardware attachment.
   2. Dimensions and locations of mortises and holes for hardware.
   3. Clearances and undercuts.

1.4 INFORMATIONAL SUBMITTALS

A. Sample Warranty: For special warranty.

1.5 CLOSEOUT SUBMITTALS

A. Special warranties.

1.6 DELIVERY, STORAGE, AND HANDLING

A. Comply with requirements of referenced standard and manufacturer's written instructions.

B. Package doors individually in cardboard cartons, and wrap bundles of doors in plastic sheeting.

C. Mark each door on bottom rail with opening number used on Shop Drawings.

1.7 FIELD CONDITIONS

A. Environmental Limitations:
   1. Do not deliver or install doors until building is enclosed and weathertight, wet work is complete, and HVAC system is operating and maintaining temperature between 60 and 90 deg F and relative humidity between 43 and 70 percent during remainder of construction period.

1.8 WARRANTY

A. Special Warranty: Manufacturer agrees to repair or replace doors that fail in materials or workmanship within specified warranty period.
   1. Failures include, but are not limited to, the following:
      a. Delamination of veneer.
      b. Warping (bow, cup, or twist) more than 1/4 inch in a 42-by-84-inch section.
      c. Telegraphing of core construction in face veneers exceeding 0.01 inch in a 3-inch span.
   2. Warranty Period for Hollow-Core Interior Doors: Two years from date of Substantial Completion.

PART 2 - PRODUCTS

2.1 HOLLOW-CORE FLUSH WOOD DOORS FOR OPAQUE FINISH

A. Interior Doors:
   1. Manufacturers: One of the following:
      a. Chappell Door Co.
      b. Haley Brothers Inc.
      c. Lambton Doors.

   2. Performance Grade: WDMA ANSI/I.S. 1A Standard Duty.
   3. Faces: Hardboard or MDF.
      a. Hardboard Faces: ANSI A135.4, Class 1 (tempered) or Class 2 (standard).
      b. MDF Faces: ANSI A208.2, Grade 150 or Grade 160.
   4. Exposed Vertical Edges: Any closed-grain hardwood.
   5. Blocking: 5-by-18-inch wood lock blocks.

2.2 FABRICATION

A. Factory fit doors to suit frame-opening sizes indicated.
   1. Comply with clearance requirements of referenced quality standard for fitting unless otherwise indicated.

B. Factory machine doors for hardware that is not surface applied.
   1. Locate hardware to comply with DHI-WDHS-3.

2. Comply with final hardware schedules, door frame Shop Drawings, ANSI/BHMA-156.115-W, and hardware templates.

2.3 FACTORY PRIMING

A. Doors for Opaque Finish: Factory prime faces, all four edges, edges of cutouts, and mortises with one coat of wood primer specified in Section 099123" Interior Painting."

PART 3 - EXECUTION

3.1 EXAMINATION

A. Examine doors and installed door frames, with Installer present, before hanging doors.
   1. Verify that installed frames comply with indicated requirements for type, size, location, and swing characteristics and have been installed with level heads and plumb jambs.
   2. Reject doors with defects.

B. Proceed with installation only after unsatisfactory conditions have been corrected.

3.2 INSTALLATION

A. Hardware: For installation, see Section 087100 "Door Hardware."

B. Installation Instructions: Install doors to comply with manufacturer's written instructions.

C. Install frames level, plumb, true, and straight.
   1. Shim as required with concealed shims. Install level and plumb to a tolerance of 1/8 inch in 96 inches.
   2. Anchor frames to anchors or blocking built in or directly attached to substrates.
      a. Secure with countersunk, concealed fasteners and blind nailing.
      b. Use fine finishing nails for exposed fastening, countersunk and filled flush with woodwork.

D. Factory-Fitted Doors: Align in frames for uniform clearance at each edge.

3.3 ADJUSTING

A. Operation: Rehang or replace doors that do not swing or operate freely.

END OF SECTION 081416

SECTION 081516 - VINYL FRENCH DOORS

PART 1 - GENERAL

1.1 SUMMARY

A. Section includes vinyl french doors for exterior locations.

B. Related Requirements:
   1. Section 088000 “Glazing” for door glazing.

1.2 ACTION SUBMITTALS

A. Product Data: For each type of product indicated. Include construction details, material descriptions, fabrication methods, dimensions of individual components and profiles, hardware, finishes, and operating instructions.

B. Shop Drawings: Include plans, elevations, sections, details, hardware, attachments to other work, operational clearances, and the following:

1.3 INFORMATIONAL SUBMITTALS

A. Qualification Data: For qualified Installer.

B. Product Test Reports: Based on evaluation of comprehensive tests performed within the last four years by a qualified testing agency, for each class, grade, and size of vinyl french doors.

C. Warranty: Sample of special warranty.

1.4 QUALITY ASSURANCE

A. Installer Qualifications: An installer acceptable to french door manufacturer for installation of units required for this Project.

B. Fenestration Standard: Comply with AAMA/WDMA/CSA 101/I.S.2/A440, "Standard/Specification for Windows, Doors, and Unit Skylights."
   1. Provide AAMA-certified vinyl french glass doors with an attached label.

C. Safety Glass: Category II materials complying with testing requirements in 16 CFR 1201.
   1. Permanently mark safety glass with certification label of the SGCC or another certification agency acceptable to authorities having jurisdiction.

D. Glazing Publications: Comply with published recommendations of glass manufacturers and with NGA's "GANA Glazing Manual."

1.5 WARRANTY

A. Special Warranty: Manufacturer's standard form in which manufacturer agrees to repair or replace vinyl french doors that fail in materials or workmanship within specified warranty period.
   1. Failures include, but are not limited to, the following:
      a. Failure to meet performance requirements.
      b. Structural failures including excessive deflection.
      c. Water leakage or air infiltration.
      d. Faulty operation of hardware.
      e. Deterioration of vinyl, other materials, and finishes beyond normal weathering.
      f. Deterioration of laminated glass as defined in Section 088000 "Glazing."
   2. Warranty Periods:
      a. French Door: Three years from date of Substantial Completion.
      b. Glazing: 10 years from date of Substantial Completion.

PART 2 - PRODUCTS

2.1 MANUFACTURERS

A. Basis-of-Design Product: PGT Custom Windows + Doors; Preferred EnergyVue FD-5455 French Door.

2.2 FRENCH DOOR PERFORMANCE

A. AAMA/WDMA/CSA Performance Requirements: Comply with AAMA/WDMA/CSA 101/I.S.2/A440.

B. Water-Penetration Resistance: No water leakage as defined in AAMA/WDMA/CSA referenced test methods at a water test pressure equaling that indicated, when tested according to AAMA/WDMA/CSA 101/I.S.2/A440, Water Penetration Resistance Test.
   1. Test Pressure: 15 percent of positive design pressure, but not less than 12 lbf/sq. ft.

C. Forced-Entry Resistance: Comply with Performance Grade 10 requirements when tested according to ASTM F842.

D. Operating Force and Auxiliary (Durability) Tests: Tested according to and complying with AAMA/WDMA/CSA 101/I.S.2/A440.

E. Structural Performance: Provide vinyl french doors capable of withstanding the effects of the following loads and stresses within limits and under conditions indicated, based on testing units representative of those indicated for Project that pass AAMA/WDMA/CSA 101/I.S.2/A440, Uniform Load Structural Test:
   1. Design Wind Loads: Determine design wind loads according to ASCE/SEI 7.
   2. Deflection Limits: Design glass framing system to limit lateral deflections of glass edges to less than 1/175 of glass-edge length or 3/4 inch, whichever is less, at design pressure based on testing performed according to AAMA/WDMA/CSA 101/I.S.2/A440, Uniform Load Deflection Test, or structural computations.

F. Energy Performance: Certified and labeled by manufacturer for energy performance pursuant to Florida Building Code: Energy Conservation.

2.3 MATERIALS

A. Door Construction: Extruded rigid polyvinyl chloride (PVC) complying with AAMA 303. Mitered and heat fused to provide fully welded corner assembly with no evidence of welding. Frame type to suit attachment substrates.

B. Sills: Fabricated with integral weeps.

C. Vinyl Cladding: Consisting of a rigid PVC sheath made from PVC complying with ASTM D4726, in permanent, integral color as selected by Architect.

D. Trim and Glazing Stops: Material and finish to match frame members.

E. Fasteners: Aluminum, nonmagnetic stainless steel, or other materials warranted by manufacturer to be noncorrosive for SC 3 severe service conditions and compatible with vinyl french glass door members, cladding, trim, hardware, anchors, and other components.
   1. Exposed Fasteners: Unless unavoidable for applying hardware, do not use exposed fasteners. For application of hardware, use fasteners that match finish of member or hardware being fastened, as appropriate.

F. Anchors, Clips, Reinforcing Members, and Accessories: Non-corrosive metal; sufficient strength to withstand design pressure indicated.

G. Integral Fin: PVC or extruded- or rolled-aluminum nailing fins for securing frame to structure; provide sufficient strength to withstand design pressure indicated.

H. Compression-Type Weather Stripping: Provide compressible weather stripping designed for permanently resilient sealing under bumper or wiper action, and completely concealed when vinyl french glass door is closed.
   1. Weather-Stripping Material: Manufacturer's standard system and materials complying with AAMA/WDMA/CSA 101/I.S.2/A440.

2.4 GLAZING

A. Glass and Glazing System: Comply with Section 088000 "Glazing" for safety glass and glazing requirements applicable to glazed vinyl french glass doors.
   1. Clear, insulating-glass units, with low-E coating sputtered on second surface of outer lite.

B. Glazing System: Manufacturer's standard factory-glazing system that produces weathertight seal.

2.5 HARDWARE

A. General: Provide manufacturer's standard hardware, fabricated from a corrosion-resistant material complying with AAMA 907; designed to smoothly operate, tightly close, and securely lock vinyl french glass doors and sized to accommodate door weight and dimensions. Do not use aluminum in frictional contact with other metals. Where exposed, provide nonmagnetic stainless steel.
   1. Hardware Finish: As selected by Architect from manufacturer’s standard finishes.

B. Butt Hinges: Fully mortised stainless steel hinges with stainless steel pins.

C. Door Lockset: Cylindrical lockset with lever handle; design as selected by Architect from manufacturer’s full product line.

D. Lock: Install manufacturer's keyed cylinder lock, and multipoint locking device.
   1. Keying System: All cylinders keyed alike.

E. Threshold: Provide manufacturer's standard threshold of thickness, dimensions, and profile indicated; designed to comply with performance requirements indicated and to drain to exterior; with manufacturer's standard finish.

2.6 FABRICATION

A. Fabricate vinyl french glass doors in sizes indicated. Include a complete system for assembling components and anchoring doors.

B. Fabricate vinyl french glass doors that are reglazable without dismantling framing.

C. Weather Stripping: Provide full-perimeter weather stripping for each door unless otherwise indicated.

D. Factory machine vinyl french glass doors for openings and hardware that is not surface applied.

E. Complete fabrication, assembly, finishing, hardware application, and other work in the factory to greatest extent possible. Disassemble components only as necessary for shipment and installation. Allow for scribing, trimming, and fitting at Project site.

F. Factory-Glazed Fabrication: Glaze vinyl french glass doors in the factory. Comply with requirements in Section 088000 "Glazing" and with AAMA/WDMA/CSA 101/I.S.2/A440.

PART 3 - EXECUTION

3.1 INSTALLATION

A. General: Install doors, frames, and accessories according to manufacturer's written installation instructions, approved shop drawings, and as herein specified.

B. Install french doors level, plumb, square, true to line, without distortion, warp or rack of frames and doors, or impeding thermal movement, anchored securely in place to structural support.

C. Set sill members in bed of sealant for weathertight construction.

3.2 ADJUSTING, CLEANING, AND PROTECTION

A. Lubricate hardware and moving parts.

B. Adjust doors to provide a tight fit at contact points and weather stripping for smooth operation, without binding, and weathertight closure.

C. Adjust hardware for proper alignment, smooth operation, and proper latching without unnecessary force or excessive clearance.

D. Remove and replace glass that has been broken, chipped, cracked, abraded, or damaged during construction period.

E. Refinish or replace french doors with damaged finishes.

F. Replace damaged components.

END OF SECTION 081516

SECTION 081573 - SLIDING VINYL GLASS DOORS

PART 1 - GENERAL

1.1 SUMMARY

A. Section includes sliding vinyl glass doors for exterior locations.

1.2 ACTION SUBMITTALS

A. Product Data: For each type of product indicated. Include construction details, material descriptions, fabrication methods, dimensions of individual components and profiles, hardware, finishes, and operating instructions.

B. Shop Drawings: For sliding vinyl glass doors. Include plans, elevations, sections, details, hardware, attachments to other work, and operational clearances.

1.3 INFORMATIONAL SUBMITTALS

A. Qualification Data: For qualified Installer.

B. Product Test Reports: Based on evaluation of comprehensive tests performed within the last four years by a qualified testing agency, for each class, grade, and size of sliding vinyl doors.

C. Warranty: Sample of special warranty.

1.4 QUALITY ASSURANCE

A. Installer Qualifications: An installer acceptable to sliding door manufacturer for installation of units required for this Project.

B. Fenestration Standard: Comply with AAMA/WDMA/CSA 101/I.S.2/A440, "Standard/Specification for Windows, Doors, and Unit Skylights," for minimum standards of performance, materials, components, accessories, and fabrication. Comply with more stringent requirements if indicated.
   1. Provide AAMA-certified, sliding vinyl glass doors with an attached label.

C. Safety Glass: Category II materials complying with testing requirements in 16 CFR 1201.
   1. Permanently mark safety glass with certification label of the SGCC or another certification agency acceptable to authorities having jurisdiction.

D. Glazing Publications: Comply with published recommendations of glass manufacturers and with NGA's "GANA Glazing Manual."

1.5 WARRANTY

A. Special Warranty: Manufacturer's standard form in which manufacturer agrees to repair or replace sliding vinyl doors that fail in materials or workmanship within specified warranty period.
   1. Failures include, but are not limited to, the following:
      a. Failure to meet performance requirements.
      b. Structural failures including excessive deflection.
      c. Water leakage or air infiltration.
      d. Faulty operation of movable panels and hardware.
      e. Deterioration of vinyl, other materials, and finishes beyond normal weathering.
      f. Deterioration of laminated glass as defined in Section 088000 "Glazing."
   2. Warranty Period:
      a. Sliding Door: Three years from date of Substantial Completion.
      b. Glazing: 10 years from date of Substantial Completion.

PART 2 - PRODUCTS

2.1 MANUFACTURERS

A. Basis-of-Design Product: PGT Custom Windows + Doors; Preferred EnergyVue SGD 5470 Vinyl Sliding Glass Door.

2.2 PERFORMANCE REQUIREMENTS

A. AAMA/WDMA/CSA Performance Requirements: Provide sliding vinyl glass doors of performance indicated that comply with AAMA/WDMA/CSA 101/I.S.2/A440 unless more stringent performance requirements are indicated.

B. Water-Penetration Resistance: No water leakage as defined in AAMA/WDMA/CSA referenced test methods at a water test pressure equaling that indicated, when tested according to AAMA/WDMA/CSA 101/I.S.2/A440, Water Penetration Resistance Test.
   1. Test Pressure: 15 percent of positive design pressure, but not less than 2.9 lbf/sq. ft. or more than 12 lbf/sq. ft.

C. Forced-Entry Resistance: Comply with Performance Grade 10 requirements when tested according to ASTM F842.

D. Operating Force and Auxiliary (Durability) Tests: Tested according to and complying with AAMA/WDMA/CSA 101/I.S.2/A440.

E. Structural Performance: Provide sliding vinyl doors capable of withstanding the effects of the following loads and stresses within limits and under conditions indicated, based on testing units representative of those indicated for Project that pass AAMA/WDMA/CSA 101/I.S.2/A440, Uniform Load Structural Test:
   1. Design Wind Loads: Determine design wind loads according to ASCE/SEI 7.

2. Deflection Limits: Design glass framing system to limit lateral deflections of glass edges to less than 1/175 of glass-edge length or 3/4 inch, whichever is less, at design pressure based on testing performed according to AAMA/WDMA/CSA 101/I.S.2/A440, Uniform Load Deflection Test, or structural computations.

F. Energy Performance: Comply with Florida Building Code: Energy Conservation for thermal transmittance and SHGC.

2.3 MATERIALS

A. Frames: Extruded rigid polyvinyl chloride (PVC) complying with AAMA 303. Mitered and heat fused to provide fully welded corner assembly with no evidence of welding. Frame type to suit attachment substrates.

B. Door Panels: Extruded rigid PVC complying with AAMA 303. Mitered and heat fused to provide fully welded corner assembly with no evidence of welding.

C. Sills: Fabricated with integral weeps.

D. Insulating Glass: Manufacturer’s standard assembly with Low-E coating.

E. Weatherstripping: Fin-type pile around perimeter of vent panel.

F. Vinyl Cladding: Consisting of a rigid PVC sheath made from PVC complying with ASTM D4726, in permanent, integral color as selected by Architect.

G. Trim and Glazing Stops: Material and finish to match frame members.

H. Fasteners: Non-corrosive metal.
1. Exposed Fasteners: Unless unavoidable for applying hardware, do not use exposed fasteners. For application of hardware, use fasteners that match finish of member or hardware being fastened, as appropriate.

I. Anchors, Clips, Reinforcing Members, and Accessories: Non-corrosive metal; provide sufficient strength to withstand design pressure indicated.

J. Integral Fin: PVC or extruded- or rolled-aluminum nailing fins for securing frame to structure; provide sufficient strength to withstand design pressure indicated.

K. Compression-Type Weather Stripping: Provide compressible weather stripping designed for permanently resilient sealing under bumper or wiper action, and completely concealed when sliding vinyl glass door is closed.
1. Weather-Stripping Material: Manufacturer's standard system and materials complying with AAMA/WDMA/CSA 101/I.S.2/A440.

L. Sliding-Type Weather Stripping: Provide woven-pile weather stripping of wool, polypropylene, or nylon pile and resin-impregnated backing fabric. Comply with AAMA 701.

1. Weather Seals: Provide weather stripping with integral barrier fin or fins of semirigid, polypropylene sheet or polypropylene-coated material. Comply with AAMA 702.

2.4 SLIDING DOOR PERFORMANCE

A. AAMA/WDMA/CSA Performance Requirements: Provide sliding vinyl glass doors of performance indicated that comply with AAMA/WDMA/CSA 101/I.S.2/A440 unless more stringent performance requirements are indicated.

B. Water-Penetration Resistance: No water leakage as defined in AAMA/WDMA/CSA referenced test methods at a water test pressure equaling that indicated, when tested according to AAMA/WDMA/CSA 101/I.S.2/A440, Water Penetration Resistance Test.
   1. Test Pressure: 15 percent of positive design pressure, but not less than 2.9 lbf/sq. ft. or more than 12 lbf/sq. ft.

C. Forced-Entry Resistance: Comply with Performance Grade 10 requirements when tested according to ASTM F 842.

D. Operating Force and Auxiliary (Durability) Tests: Tested according to and complying with AAMA/WDMA/CSA 101/I.S.2/A440.

2.5 GLAZING

A. Glass and Glazing System: Comply with Section 088000 "Glazing" for safety glass, laminated glass, and glazing requirements applicable to glazed sliding vinyl glass doors.

B. Glazing System: Manufacturer's standard factory-glazing system that produces weathertight seal and complies with requirements for windborne-debris resistance.

2.6 HARDWARE

A. General: Provide manufacturer's standard hardware, fabricated from a corrosion-resistant material complying with AAMA 907; designed to smoothly operate, tightly close, and securely lock sliding vinyl glass doors and sized to accommodate panel weight and dimensions. Do not use aluminum in frictional contact with other metals. Where exposed, provide nonmagnetic stainless steel.
   1. Hardware Finish: Manufacturer's standard.

B. Roller Assemblies: Provide movable panels with adjustable-height roller assemblies, complying with AAMA 906, consisting of self-lubricating, dual tandem stainless-steel ball-bearing rollers; two roller assemblies per panel.

C. Threshold and Sill Cap/Track: Provide manufacturer's standard threshold and track of thickness, dimensions, and profile indicated; designed to comply with performance requirements indicated and to drain to exterior; with manufacturer's standard finish.

D. Door Pulls: Provide manufacturer's standard metal pull grips.

E. Lock: Install manufacturer's keyed cylinder lock, and multipoint locking device on each movable panel, lockable from the inside only. Adjust locking device to allow unobstructed movement of the panel across adjacent panel in the direction indicated.
   1. Keying System: All cylinders keyed alike.

F. Limit Stops: Resilient rubber.

2.7 FABRICATION

A. Fabricate sliding vinyl glass doors in sizes indicated. Include a complete system for assembling components and anchoring windows.

B. Fabricate sliding vinyl glass doors that are reglazable without dismantling panel framing.

C. Weather Stripping: Provide full-perimeter weather stripping for each operable panel unless otherwise indicated.

D. Factory machine sliding vinyl glass doors for openings and hardware that is not surface applied.

E. Complete fabrication, assembly, finishing, hardware application, and other work in the factory to greatest extent possible. Disassemble components only as necessary for shipment and installation. Allow for scribing, trimming, and fitting at Project site.

F. Factory-Glazed Fabrication: Glaze sliding vinyl glass doors in the factory. Comply with requirements in Section 088000 "Glazing" and with AAMA/WDMA/CSA 101/I.S.2/A440.

PART 3 - EXECUTION

3.1 INSTALLATION

A. Comply with Drawings, Shop Drawings, and manufacturer's written instructions for installing windows, hardware, accessories, and other components.

B. Install sliding doors level, plumb, square, true to line, without distortion, warp or rack of frames and panels, or impeding thermal movement, and anchored securely in place to structural support.

C. Set sill members in bed of sealant or with gaskets, as indicated, for weathertight construction.

3.2 ADJUSTING, CLEANING, AND PROTECTION

A. Lubricate hardware and moving parts.

B. Adjust operating panels and screens to provide a tight fit at contact points and weather stripping for smooth operation, without binding, and weathertight closure.

C. Adjust hardware for proper alignment, smooth operation, and proper latching without unnecessary force or excessive clearance.

D. Clean components according to manufacturer's written recommendations.

E. Refinish or replace sliding doors with damaged finishes.

F. Replace damaged components.

END OF SECTION 081573

SECTION 084116 - INTERIOR ALUMINUM-FRAMED STOREFRONTS

PART 1 - GENERAL

1.1 SUMMARY

A. Section Includes:
   1. Interior storefront framing.

B. Related Requirements:
   1. Section 081416 “Flush Wood Doors” for wood doors in interior storefront framing.
   2. Section 088000 “Glazing.”

1.2 PREINSTALLATION MEETINGS

A. Preinstallation Conference: Conduct conference at Project site.

1.3 ACTION SUBMITTALS

A. Product Data: For each type of product.
   1. Include construction details, material descriptions, dimensions of individual components and profiles, and finishes.

B. Shop Drawings: For interior aluminum-framed storefronts. Include plans, elevations, sections, full-size details, and attachments to other work.

C. Samples for Verification: For each type of exposed finish required, in manufacturer's standard sizes.

1.4 INFORMATIONAL SUBMITTALS

A. Qualification Data: For Installer.

B. Sample Warranties: For special warranties.

1.5 CLOSEOUT SUBMITTALS

A. Maintenance Data: For interior aluminum-framed storefronts to include in maintenance manuals.

1.6 QUALITY ASSURANCE

A. Installer Qualifications: An entity that employs installers and supervisors who are trained and approved by manufacturer.

1.7 WARRANTY

A. Special Warranty: Manufacturer agrees to repair or replace components of interior aluminum-framed storefronts that do not comply with requirements or that fail in materials or workmanship within specified warranty period.
   1. Failures include, but are not limited to, the following:
      a. Deterioration of metal finishes.
   2. Warranty Period: 10 years from date of Substantial Completion.

PART 2 - PRODUCTS

2.1 MANUFACTURERS

A. Basis of Design, Interior Storefront: YKK AP America; YES 40.

2.2 FRAMING - INTERIOR STOREFRONTS

A. Framing Members: Manufacturer's extruded- or formed-aluminum framing members of thickness required and reinforced as required to support imposed loads.
   1. Construction: Nonthermal.
   2. Glazing System: Retained mechanically with gaskets on four sides.
   3. Glazing Plane: Center.
   4. Finish: Baked-enamel or powder-coat finish.
   5. Fabrication Method: Field-fabricated stick system.

B. Backer Plates: Manufacturer's standard, continuous backer plates for framing members, if not integral, where framing abuts adjacent construction.

C. Brackets and Reinforcements: Manufacturer's standard high-strength aluminum with nonstaining, nonferrous shims for aligning system components.

D. Materials:
   1. Aluminum: Alloy and temper recommended by manufacturer for type of use and finish indicated.
      a. Sheet and Plate: ASTM B 209.
      b. Extruded Bars, Rods, Profiles, and Tubes: ASTM B 221.

2.3 GLAZING

A. Glazing and Glazing Gaskets, Interior Aluminum Framing: Comply with Section 088000 "Glazing."

2.4 ACCESSORIES

A. Fasteners and Accessories: Manufacturer's standard corrosion-resistant, nonstaining, nonbleeding fasteners and accessories compatible with adjacent materials.
   1. Reinforce members as required to receive fastener threads.
   2. Use exposed fasteners with countersunk Phillips screw heads, finished to match framing system.

B. Anchors: Three-way adjustable anchors with minimum adjustment of 1 inch that accommodate fabrication and installation tolerances in material and finish compatible with adjoining materials and recommended by manufacturer.

C. Bituminous Paint: Cold-applied asphalt-mastic paint complying with SSPC-Paint 12 requirements except containing no asbestos, formulated for 30-mil thickness per coat.

2.5 FABRICATION

A. Form or extrude aluminum shapes before finishing.

B. Weld in concealed locations to greatest extent possible to minimize distortion or discoloration of finish. Remove weld spatter and welding oxides from exposed surfaces by descaling or grinding.

C. Fabricate components that, when assembled, have the following characteristics:
   1. Profiles that are sharp, straight, and free of defects or deformations.
   2. Accurately fitted joints with ends coped or mitered.
   3. Physical and thermal isolation of glazing from framing members.
   4. Accommodations for thermal and mechanical movements of glazing and framing to maintain required glazing edge clearances.
   5. Fasteners, anchors, and connection devices that are concealed from view to greatest extent possible.

D. Mechanically Glazed Framing Members: Fabricate for flush glazing without projecting stops.

E. Storefront Framing: Fabricate components for assembly using screw-spline system.

F. After fabrication, clearly mark components to identify their locations in Project according to Shop Drawings.

2.6 ALUMINUM FINISHES

A. Baked-Enamel or Powder-Coat Finish: AAMA 2603 except with a minimum dry film thickness of 1.5 mils. Comply with coating manufacturer's written instructions for cleaning, conversion coating, and applying and baking finish.
   1. Color and Gloss: As selected by Architect from manufacturer's full range.

PART 3 - EXECUTION

3.1 EXAMINATION

A. Examine areas, with Installer present, for compliance with requirements for installation tolerances and other conditions affecting performance of the Work.

B. Proceed with installation only after unsatisfactory conditions have been corrected.

3.2 INSTALLATION

A. General:
   1. Comply with manufacturer's written instructions.
   2. Do not install damaged components.
   3. Fit joints to produce hairline joints free of burrs and distortion.
   4. Rigidly secure nonmovement joints.
   5. Install anchors with separators and isolators to prevent metal corrosion and electrolytic deterioration and to prevent impeding movement of moving joints.
   6. Seal perimeter and other joints watertight unless otherwise indicated.

B. Metal Protection:
   1. Where aluminum is in contact with dissimilar metals, protect against galvanic action by painting contact surfaces with materials recommended by manufacturer for this purpose or by installing nonconductive spacers.
   2. Where aluminum is in contact with concrete or masonry, protect against corrosion by painting contact surfaces with bituminous paint.

C. Install components plumb and true in alignment with established lines and grades.

D. Install glazing as specified in Section 088000 "Glazing."

3.3 ERECTION TOLERANCES

A. Erection Tolerances: Install interior aluminum-framed storefronts to comply with the following maximum tolerances:
   1. Plumb: 1/8 inch in 10 feet; 1/4 inch in 40 feet.
   2. Level: 1/8 inch in 20 feet; 1/4 inch in 40 feet.
   3. Alignment:

a. Where surfaces abut in line or are separated by reveal or protruding element up to 1/2 inch wide, limit offset from true alignment to 1/16 inch.
b. Where surfaces are separated by reveal or protruding element from 1/2 to 1 inch wide, limit offset from true alignment to 1/8 inch.
c. Where surfaces are separated by reveal or protruding element of 1 inch wide or more, limit offset from true alignment to 1/4 inch.

4. Location: Limit variation from plane to 1/8 inch in 12 feet; 1/2 inch over total length.

END OF SECTION 084116

SECTION 085313 - VINYL WINDOWS

PART 1 - GENERAL

1.1 SUMMARY

A. Section includes vinyl-framed windows.

1.2 ACTION SUBMITTALS

A. Product Data: For each type of product.

B. Shop Drawings: Include plans, elevations, sections, hardware, accessories, insect screens, operational clearances, and details of installation, including anchor, flashing, and sealant installation.

C. Product Schedule: For vinyl windows. Use same designations indicated on Drawings.

1.3 INFORMATIONAL SUBMITTALS

A. Qualification Data: For Installer.

B. Product test reports.

C. Sample warranties.

1.4 QUALITY ASSURANCE

A. Installer Qualifications: An installer acceptable to vinyl window manufacturer for installation of units required for this Project.

B. Mockups: Build mockups to verify selections made under Sample submittals and to demonstrate aesthetic effects and set quality standards for materials and execution.

1.5 WARRANTY

A. Manufacturer's Warranty: Manufacturer agrees to repair or replace vinyl windows that fail in materials or workmanship within specified warranty period.
   1. Failures include, but are not limited to, the following:
      a. Failure to meet performance requirements.
      b. Structural failures including excessive deflection, water leakage, and air infiltration.
      c. Faulty operation of movable sash and hardware.
      d. Deterioration of materials and finishes beyond normal weathering.
      e. Failure of insulating glass.

2. Warranty Period:
   a. Window: 10 years from date of Substantial Completion.
   b. Glazing Units: 10 years from date of Substantial Completion.

PART 2 - PRODUCTS

2.1 MANUFACTURERS

A. Basis-of-Design Product: PGT Custom Windows + Doors; Preferred EnergyVue SH5400 Single Hung.

2.2 WINDOW PERFORMANCE REQUIREMENTS

A. Product Standard: AAMA/WDMA/CSA 101/I.S.2/A440.
   1. Minimum Performance Class: As indicated on Drawings.
   2. Minimum Performance Grade: As indicated on Drawings.

B. Energy Conservation: Thermal transmittance and SHGC values according to Florida Building Code: Energy Conservation.

2.3 VINYL WINDOWS

A. Operating Type: Single-hung.

B. Frames and Sashes: Impact-resistant, UV-stabilized PVC complying with AAMA/WDMA/CSA 101/I.S.2/A440.
   1. Finish: Integral color, as scheduled.
   2. Gypsum Board Returns: Provide at interior face of frame.

C. Glass: Clear annealed glass, ASTM C 1036, Type 1, Class 1, q3.
   1. Kind: Fully tempered where indicated on Drawings.

D. Insulating-Glass Units: ASTM E2190.
   1. Glass: ASTM C1036, Type 1, Class 1, q3.
      a. Tint: Clear.
      b. Kind: Fully tempered where indicated on Drawings.
   2. Lites: Two.
   3. Filling: Fill space between glass lites with air.
   4. Low-E Coating: Sputtered on second surface.

E. Glazing System: Manufacturer's standard factory-glazing system that produces weathertight seal.

F. Hardware, General: Manufacturer's standard corrosion-resistant material sized to accommodate sash weight and dimensions.

1. Exposed Hardware Color and Finish: As selected by Architect from manufacturer's full range.

G. Hung Window Hardware:
1. Counterbalancing Mechanism: AAMA 902.
2. Locks and Latches: Operated from the inside only.
3. Tilt Hardware: Releasing tilt latch allows sash to pivot about horizontal axis.

H. Weather Stripping: Provide full-perimeter weather stripping for each operable sash unless otherwise indicated.

I. Fasteners: Noncorrosive and compatible with window members, trim, hardware, anchors, and other components.
1. Exposed Fasteners: Do not use exposed fasteners to the greatest extent possible. For application of hardware, use fasteners that match finish hardware being fastened.

2.4 ACCESSORIES

A. Dividers (False Muntins): Provide divider grilles in designs indicated for each sash lite.
1. Type: Applied.
2. Material: Manufacturer's standard.
3. Pattern: As indicated on Drawings.
4. Profile: As selected by Architect from manufacturer's full range.
5. Color: As scheduled.

2.5 INSECT SCREENS

A. General: Fabricate insect screens to fully integrate with window frame. Provide screen for each operable exterior sash. Screen wickets are not permitted.
1. Type and Location: Half, outside for single-hung sashes.

B. Aluminum Frames: Complying with SMA 1004 or SMA 1201.
1. Finish for Exterior Screens: Matching color and finish of cladding.

C. Glass-Fiber Mesh Fabric: 18-by-14 or 18-by-16 mesh complying with ASTM D 3656.
1. Mesh Color: Manufacturer's standard.

2.6 FABRICATION

A. Fabricate vinyl windows in sizes indicated. Include a complete system for assembling components and anchoring windows.

B. Glaze vinyl windows in the factory.

C. Weather strip each operable sash to provide weathertight installation.

D. Provide mullions and cover plates, compatible with window units, complete with anchors for support to structure and installation of window units. Allow for erection tolerances and provide for movement of window units due to thermal expansion and building deflections. Provide mullions and cover plates capable of withstanding design wind loads of window units. Provide manufacturer's standard finish to match window units.

E. Mount hardware through double walls of vinyl extrusions or provide corrosion-resistant reinforcement.

F. Complete fabrication, assembly, finishing, hardware application, and other work in the factory to greatest extent possible. Disassemble components only as necessary for shipment and installation. Allow for scribing, trimming, and fitting at Project site.

PART 3 - EXECUTION

3.1 EXAMINATION

A. Examine openings, substrates, structural support, anchorage, and conditions, with Installer present, for compliance with requirements for installation tolerances and other conditions affecting performance of the Work.

B. Verify rough opening dimensions, levelness of sill plate, and operational clearances.

C. Examine wall flashings, vapor retarders, water and weather barriers, and other built-in components to ensure weathertight window installation.

D. Proceed with installation only after unsatisfactory conditions have been corrected.

3.2 INSTALLATION

A. Comply with manufacturer's written instructions for installing windows, hardware, accessories, and other components. For installation procedures and requirements not addressed in manufacturer's written instructions, comply with installation requirements in ASTM E2112.

B. Install windows level, plumb, square, true to line, without distortion, anchored securely in place to structural support, and in proper relation to wall flashing and other adjacent construction to produce weathertight construction.

C. Adjust operating sashes and hardware for a tight fit at contact points and weather stripping for smooth operation and weathertight closure.

D. Clean exposed surfaces immediately after installing windows. Remove excess sealants, glazing materials, dirt, and other substances.

E. Remove and replace sashes if glass has been broken, chipped, cracked, abraded, or damaged during construction period.

END OF SECTION 085313

SECTION 087100 - DOOR HARDWARE

PART 1 - GENERAL

1.1 RELATED DOCUMENTS

A. Drawings and general provisions of the Contract, including General and Supplementary Conditions and Division 01 Specification Sections, apply to this Section.

1.2 SUMMARY

A. Section includes:
   1. Mechanical and electrified door hardware for:
      a. Swinging doors.

B. Related Sections:
   1. Section 07920 “Joint Sealants” for sealant requirements applicable to threshold installation specified in this section.

1.3 REFERENCES

A. UL - Underwriters Laboratories
   1. UL 10B - Fire Test of Door Assemblies
   2. UL 10C - Positive Pressure Test of Fire Door Assemblies
   3. UL 1784 - Air Leakage Tests of Door Assemblies
   4. UL 305 - Panic Hardware

B. DHI - Door and Hardware Institute
   1. Sequence and Format for the Hardware Schedule
   2. Recommended Locations for Builders Hardware
   3. Key Systems and Nomenclature

C. ANSI - American National Standards Institute
   1. ANSI/BHMA A156.1 - A156.29, and ANSI/BHMA A156.31 - Standards for Hardware and Specialties.

D. Florida Building Codes.

1.4 SUBMITTALS

A. General:
   1. Submit in accordance with Conditions of Contract and Division 01 requirements.
   2. Highlight, encircle, or otherwise specifically identify on submittals deviations from Contract Documents, issues of incompatibility or other issues which may detrimentally affect the Work.
   3. Prior to forwarding submittal, comply with procedures for verifying existing door and frame compatibility for new hardware, as specified in PART 3, “EXAMINATION” article, herein.

B. Action Submittals:
   1. Product Data: Product data including manufacturers’ technical product data for each item of door hardware, installation instructions, maintenance of operating parts and finish, and other information necessary to show compliance with requirements.
   2. Riser and Wiring Diagrams: After final approval of hardware schedule, submit details of electrified door hardware, indicating:
      a. Wiring Diagrams: For power, signal, and control wiring and including:
         1) Details of interface of electrified door hardware and building safety and security systems.
         2) Schematic diagram of systems that interface with electrified door hardware.
         3) Point-to-point wiring.

4) Risers.

3. Samples for Verification: If requested by Architect, submit production sample or sample installations of each type of exposed hardware unit in finish indicated, and tagged with full description for coordination with schedule.
   a. Samples will be returned to supplier in like-new condition. Units that are acceptable to Architect may, after final check of operations, be incorporated into Work, within limitations of key coordination requirements.
4. Door Hardware Schedule: Submit schedule with hardware sets in vertical format as illustrated by Sequence of Format for the Hardware Schedule as published by the Door and Hardware Institute. Indicate complete designations of each item required for each door or opening, include:
   a. Door Index; include door number, heading number, and Architects hardware set number.
   b. Opening Lock Function Spreadsheet: List locking device and function for each opening.
   c. Type, style, function, size, and finish of each hardware item.
   d. Name and manufacturer of each item.
   e. Fastenings and other pertinent information.
   f. Location of each hardware set cross-referenced to indications on Drawings.
   g. Explanation of all abbreviations, symbols, and codes contained in schedule.
   h. Mounting locations for hardware.
   i. Door and frame sizes and materials.
   j. Name and phone number for local manufacturer's representative for each product.
   k. Operational Description of openings with any electrified hardware (locks, exits, electromagnetic locks, electric strikes, automatic operators, door position switches, magnetic holders or closer/holder units, and access control components). Operational description should include how door will operate on egress, ingress, and fire and smoke alarm connection.
      1) Submittal Sequence: Submit door hardware schedule concurrent with submissions of Product Data, Samples, and Shop Drawings. Coordinate submission of door hardware schedule with scheduling requirements of other work to facilitate fabrication of other work that is critical in Project construction schedule.
5. Key Schedule:
   a. After Keying Conference, provide keying schedule listing levels of keying as well as explanation of key system's function, key symbols used and door numbers controlled.
   b. Use ANSI/BHMA A156.28 “Recommended Practices for Keying Systems” as guideline for nomenclature, definitions, and approach for selecting optimal keying system.
   c. Provide 3 copies of keying schedule for review prepared and detailed in accordance with referenced DHI publication. Include schematic keying diagram and index each key to unique door designations.
   d. Index keying schedule by door number, keyset, hardware heading number, cross keying instructions, and special key stamping instructions.
   e. Provide one complete bitting list of key cuts and one key system schematic illustrating system usage and expansion.
      1) Forward bitting list, key cuts and key system schematic directly to Owner, by means as directed by Owner.
   f. Prepare key schedule by or under supervision of supplier, detailing Owner’s final keying instructions for locks.
6. Templates: After final approval of hardware schedule, provide templates for doors, frames and other work specified to be factory prepared for door hardware installation.

C. Informational Submittals:
   1. Qualification Data: For Supplier, Installer and Architectural Hardware Consultant.
   2. Product Certificates for electrified door hardware, signed by manufacturer:
      a. Certify that door hardware approved for use on types and sizes of labeled fire-rated doors complies with listed fire-rated door assemblies.

3. Certificates of Compliance:
   a. Certificates of compliance for fire-rated hardware and installation instructions if requested by Architect or Authority Having Jurisdiction.
   b. Installer Training Meeting Certification: Letter of compliance, signed by Contractor, attesting to completion of installer training meeting specified in “QUALITY ASSURANCE” article, herein.
   c. Electrified Hardware Coordination Conference Certification: Letter of compliance, signed by Contractor, attesting to completion of electrified hardware coordination conference, specified in “QUALITY ASSURANCE” article, herein.
4. Product Test Reports: For compliance with accessibility requirements, based on evaluation of comprehensive tests performed by manufacturer and witnessed by qualified testing agency, for door hardware on doors located in accessible routes.
5. Warranty: Special warranty specified in this Section.

D. Closeout Submittals:
   1. Operations and Maintenance Data: Provide in accordance with Division 01 and include:
      a. Complete information on care, maintenance, and adjustment; data on repair and replacement parts, and information on preservation of finishes.
      b. Catalog pages for each product.
      c. Name, address, and phone number of local representatives for each manufacturer.
      d. Parts list for each product.
      e. Final approved hardware schedule edited to reflect conditions as installed.
      f. Final keying schedule
      g. Copies of floor plans with keying nomenclature
      h. As-installed wiring diagrams for each opening connected to power, both low voltage and 110 volts.
      i. Copy of warranties including appropriate reference numbers for manufacturers to identify project.

1.5 QUALITY ASSURANCE

A. Product Substitutions: Comply with product requirements stated in Division 01 and as specified herein.
   1. Where specific manufacturer’s product is named and accompanied by “No Substitute,” including make or model number or other designation, provide product specified. (Note: Certain products have been selected for their unique characteristics and particular project suitability.)
      a. Where no additional products or manufacturers are listed in product category, requirements for “No Substitute” govern product selection.

B. Supplier Qualifications and Responsibilities: Recognized architectural hardware supplier with record of successful in-service performance for supplying door hardware similar in quantity, type, and quality to that indicated for this Project and that provides certified Architectural Hardware Consultant (AHC) available to Owner, Architect, and Contractor, at reasonable times during the Work for consultation.
   1. Warehousing Facilities: In Project's vicinity.
   2. Scheduling Responsibility: Preparation of door hardware and keying schedules.
   3. Engineering Responsibility: Preparation of data for electrified door hardware, including Shop Drawings, based on testing and engineering analysis of manufacturer's standard units in assemblies similar to those indicated for this Project.
   4. Coordination Responsibility: Coordinate installation of electronic security hardware with Architect and electrical engineers and provide installation and technical data to Architect and other related subcontractors.
      a. Upon completion of electronic security hardware installation, inspect and verify that all components are working properly.

C. Installer Qualifications: Qualified tradesmen, skilled in application of commercial grade hardware with record of successful in-service performance for installing door hardware similar in quantity, type, and quality to that indicated for this Project.

D. Architectural Hardware Consultant Qualifications: Person who is experienced in providing consulting services for door hardware installations that are comparable in material, design, and extent to that indicated for this Project and meets these requirements:
   1. For door hardware, DHI-certified, Architectural Hardware Consultant (AHC).
   2. Can provide installation and technical data to Architect and other related subcontractors.
   3. Can inspect and verify components are in working order upon completion of installation.
   4. Capable of producing wiring diagrams.
   5. Capable of coordinating installation of electrified hardware with Architect and electrical engineers.

E. Single Source Responsibility: Obtain each type of door hardware from single manufacturer.
   1. Provide electrified door hardware from same manufacturer as mechanical door hardware, unless otherwise indicated.
   2. Manufacturers that perform electrical modifications and that are listed by testing and inspecting agency acceptable to authorities having jurisdiction are acceptable.

F. Exterior Openings Severe Windstorm Components testing: Listed and labeled by a testing and inspecting agency acceptable to authority having jurisdiction, based on testing according to ANSI A250.13. Further compliance with Florida Building Codes for Exterior Openings.

G. Fire-Rated Door Openings: Provide door hardware for fire-rated openings that complies with NFPA 80 and requirements of authorities having jurisdiction. Provide only items of door hardware that are listed and are identical to products tested by Underwriters Laboratories, Intertek Testing Services, or other testing and inspecting organizations acceptable to authorities having jurisdiction for use on types and sizes of doors indicated, based on testing at positive pressure and according to NFPA 252 or UL 10C and in compliance with requirements of fire-rated door and door frame labels.

H. Smoke- and Draft-Control Door Assemblies: Where smoke- and draft-control door assemblies are required, provide door hardware that meets requirements of assemblies tested according to UL 1784 and installed in compliance with NFPA 105.
   1. Air Leakage Rate: Maximum air leakage of 0.3 cfm/sq. ft. at tested pressure differential of 0.3-inch wg of water.

I. Electrified Door Hardware: Listed and labeled as defined in NFPA 70, Article 100, by testing agency acceptable to authorities having jurisdiction.

J. Means of Egress Doors: Latches do not require more than 15 lbf to release latch. Locks do not require use of key, tool, or special knowledge for operation.

K. Accessibility Requirements: For door hardware on doors in an accessible route, comply with governing accessibility regulations cited in “REFERENCES” article, herein.
   1. Provide operating devices that do not require tight grasping, pinching, or twisting of wrist and that operate with force of not more than 5 lbf.
   2. Maximum opening-force requirements:
      a. Interior, Non-Fire-Rated Hinged Doors: 5 lbf applied perpendicular to door.
      b. Sliding or Folding Doors: 5 lbf applied parallel to door at latch.
      c. Fire Doors: Minimum opening force allowable by authorities having jurisdiction.
   3. Bevel raised thresholds with slope of not more than 1:2. Provide thresholds not more than 1/2 inch high.
   4. Adjust door closer sweep periods so that, from open position of 70 degrees, door will take at least 3 seconds to move to 3 inches from latch, measured to leading edge of door.

L. Keying Conference: Conduct conference at Project site to comply with requirements in Division 01.
   1. Attendees: Owner, Contractor, Architect, Installer, and Supplier’s Architectural Hardware Consultant.
   2. Incorporate keying conference decisions into final keying schedule after reviewing door hardware keying system including:
      a. Function of building, flow of traffic, purpose of each area, degree of security required, and plans for future expansion.

b. Preliminary key system schematic diagram.
c. Requirements for key control system.
d. Requirements for access control.
e. Address for delivery of keys.

M. Pre-installation Conference: Conduct conference at Project site**.**
1. Review and finalize construction schedule and verify availability of materials, Installer's personnel, equipment, and facilities needed to make progress and avoid delays.
2. Inspect and discuss preparatory work performed by other trades.
3. Inspect and discuss electrical roughing-in for electrified door hardware.
4. Review sequence of operation for each type of electrified door hardware.
5. Review required testing, inspecting, and certifying procedures.

N. Coordination Conferences:
1. Installation Coordination Conference: Prior to hardware installation, schedule and hold meeting to review questions or concerns related to proper installation and adjustment of door hardware.
2. Electrified Hardware Coordination Conference: Prior to ordering electrified hardware, schedule and hold meeting to coordinate door hardware with security, electrical, doors and frames, and other related suppliers.

1.6 DELIVERY, STORAGE, AND HANDLING

A. Inventory door hardware on receipt and provide secure lock-up for hardware delivered to Project site.

B. Tag each item or package separately with identification coordinated with final door hardware schedule, and include installation instructions, templates, and necessary fasteners with each item or package.
1. Deliver each article of hardware in manufacturer’s original packaging.

C. Project Conditions:
1. Maintain manufacturer-recommended environmental conditions throughout storage and installation periods.
2. Provide secure lock-up for door hardware delivered to Project, but not yet installed. Control handling and installation of hardware items so that completion of Work will not be delayed by hardware losses both before and after installation.

D. Protection and Damage:
1. Promptly replace products damaged during shipping.
2. Handle hardware in manner to avoid damage, marring, or scratching. Correct, replace or repair products damaged during Work.
3. Protect products against malfunction due to paint, solvent, cleanser, or any chemical agent.

E. Deliver keys to manufacturer of key control system for subsequent delivery to Owner.

F. Deliver keys **and permanent cores** to Owner by registered mail, overnight package service or hand delivery with signed receipt.

1.7 COORDINATION

A. Coordinate layout and installation of floor-recessed door hardware with floor construction. Cast anchoring inserts into concrete. Concrete, reinforcement, and formwork requirements are specified in Division 03.

B. Installation Templates: Distribute for doors, frames, and other work specified to be factory prepared. Check Shop Drawings of other work to confirm that adequate provisions are made for locating and installing door hardware to comply with indicated requirements.

C. Security: Coordinate installation of door hardware, keying, and access control with Owner's security consultant.

D. Electrical System Roughing-In: Coordinate layout and installation of electrified door hardware with connections to power supplies and building safety and security systems.

E. Existing Openings: Where hardware components are scheduled for application to existing construction or where modifications to existing door hardware are required, field verify existing conditions and coordinate installation of door hardware to suit opening conditions and to provide proper door operation.

F. Direct shipments not permitted, unless approved by Contractor.

1.8 WARRANTY

A. Special Warranty: Manufacturer's standard form in which manufacturer agrees to repair or replace components of door hardware that fail in materials or workmanship within specified warranty period.
   1. Warranty Period: Years from date of Substantial Completion, for durations indicated.
      a. Closers:
         1) Mechanical: 10 years.
      b. Exit Devices:
         1) Mechanical: 3 years.
      c. Locksets:
         1) Mechanical: 3 years.
   2. Warranty does not cover damage or faulty operation due to improper installation, improper use or abuse.

1.9 MAINTENANCE

A. Maintenance Tools:
   1. Furnish complete set of special tools required for maintenance and adjustment of hardware, including changing of cylinders.

PART 2 - PRODUCTS

2.1 MANUFACTURERS

A. The Owner requires use of certain products for their unique characteristics and particular project suitability to ensure continuity of existing and future performance and maintenance standards. After investigating available product offerings Awarding Authority has elected to prepare proprietary specifications.

B. Approval of manufacturers and/or products other than those listed as “Scheduled Manufacturer” or “Acceptable Manufacturers” in the individual article for the product category shall be in accordance with QUALITY ASSURANCE article, herein.

C. Approval of products from manufacturers indicated in “Acceptable Manufacturers” is contingent upon those products providing all functions and features and meeting all requirements of scheduled manufacturer’s product.

D. Hand of Door: Drawings show direction of slide, swing, or hand of each door leaf. Furnish each item of hardware for proper installation and operation of door movement as shown.

E. Where specified hardware is not adaptable to finished shape or size of members requiring hardware, furnish suitable types having same operation and quality as type specified, subject to Architect's approval.

2.2 MATERIALS

A. Fasteners
   1. Provide hardware manufactured to conform to published templates, generally prepared for machine screw installation.

2. Furnish screws for installation with each hardware item. Finish exposed (exposed under any condition) screws to match hardware finish, or, if exposed in surfaces of other work, to match finish of this other work including prepared for paint surfaces to receive painted finish.
3. Provide concealed fasteners for hardware units exposed when door is closed except when no standard units of type specified are available with concealed fasteners. Do not use thru-bolts for installation where bolt head or nut on opposite face is exposed in other work unless thru-bolts are required to fasten hardware securely. Review door specification and advise Architect if thru-bolts are required.
4. Install hardware with fasteners provided by hardware manufacturer.

2.3 HINGES

A. Provide Five-knuckle, Ball Bearing hinges.
   1. Manufacturers and Products:
      a. Scheduled Manufacturer and Product: Best FBB and CB Series.
      b. Acceptable Manufacturer: Ives 5BB series, McKinney TA series, Hager BB series.

B. Requirements, unless otherwise specified:
   1. 1-3/4” thick doors, up to and including 36 inches wide:
      a. Exterior: Standard weight, bronze or stainless steel, 4-1/2 inch high.
      b. Interior: Standard weight, steel, 4-1/2 inch high.
   2. 1-3/4” thick doors over 36 inches wide:
      a. Exterior: Heavy weight, bronze/stainless steel, 5 inch high.
      b. Interior: Heavy weight, steel, 5 inch high.
   3. 2” or thicker doors:
      a. Exterior: Heavy weight, bronze or stainless steel, 5 inch high.
      b. Interior: Heavy weight, steel, 5 inch high.
   4. Provide three hinges per door leaf for doors 90 inches or less in height, and one additional hinge for each 30 inches of additional door height.
   5. Where new hinges are specified for existing doors or existing frames, provide new hinges of identical size to hinge preparation present in existing door or existing frame.
   6. Hinge Pins: Except as otherwise indicated, provide hinge pins as follows:
      a. Steel Hinges: Steel pins.
      b. Non-Ferrous Hinges: Stainless steel pins.
      c. Out-Swinging Exterior Doors: Non-removable pins.
      d. Out-Swinging Interior Lockable Doors: Non-removable pins.
      e. Interior Non-lockable Doors: Non-rising pins.
   7. Width of hinges: 4-1/2” at 1-3/4” thick doors, and 5” at 2” or thicker doors. Adjust hinge width as required for door, frame, and wall conditions to allow proper degree of opening.
   8. Doors 36” wide or less furnish hinges 4-1/2” high; doors greater than 36” wide furnish hinges 5” high, heavy weight or standard weight as specified.
   9. Provide exterior hinges with additional corrosion resistant coating.

2.4 FLUSH BOLTS

A. Manufacturers:
   1. Scheduled Manufacturer: Rockwood
   2. Acceptable Manufacturer: Burns, Don-Jo, Ives, Trimco.

B. Requirements:
   1. Provide automatic, constant latching, and manual flush bolts with forged bronze or stainless steel face plates, extruded brass levers, and with wrought brass guides and strikes. Provide 12” steel or brass rods at doors up to 90 inches in height. For doors over 90 inches in height increase top rods by 12” for each additional 6” of door height. Provide dust-proof strikes at each bottom flush bolt.

2.5 BORED LOCKS – GRADE 2, STANDARD DUTY

A. Manufacturers and Products:
   1. Scheduled Manufacturers and Products: Dormakaba Commercial QCL200 Series.
   2. Acceptable Manufacturers: Sargent 10 Line series, Schlage ND series.

B. Requirements
   1. Certified by BHMA for ANSI A156.2 Series Grade 2, UL10C listed.
   2. ANSI A117.1 Accessibility Code (ADA Compliant).
   3. Fit modified ANSI A115.2 door preparation.
   4. 2-3/4” backset standard.
   5. Latch Faceplate 1 1/8” x 2 1/4".
   6. ANSI Strike 1 1/4” x 4 7/8” standard.
   7. 1/2" inch throw latchbolt for all single doors.
   8. Function and design as indicated in the hardware groups.
   9. Lever Design: “M” Summit Lever.

2.6 TUBULAR LOCKS – GRADE 2, STANDARD DUTY

A. Manufacturers and Products:
   1. Scheduled Manufacturer and Product: Dormakaba Commercial QTL200 Series.
   2. Acceptable Manufacturers: Sargent DL series, Schlage LT series.

B. Requirements
   1. Provide tubular lever sets conforming to ANSI/BHMA A156.2 Series 4000, Grade 2.
   2. Cylinders: Refer to “KEYING” article, herein.
   3. Provide locks with standard 2-3/4” backset, unless noted otherwise, with 1/2” latch throw. Provide 2-3/8” backset where noted of if door or frame detail requires. Provide proper latch throw for UL listing at pairs.
   4. Lever Design: “M” Summit Lever.

2.7 DEADBOLT LOCKS

A. Cylindrical Deadbolt:
   1. Manufacturers and Products:
      a. Scheduled Manufacturers and Products: Dormakaba Commercial QDB200 Series.
      b. Acceptable Manufacturers: Sargent 480 Series, Schlage B series.
   2. Requirements:
      a. Tested and approved by ANSI A156.5, Operational Grade 1.
      b. Fit modified ANSI A115.3 door preparation.
      c. Locksets and cores to be of the same manufacturer to maintain complete lockset warranty.
      d. 2-3/4” backset, or 2 3/8” backset as needed.
      e. 1” throw deadbolt.
      f. Provide locksets with 7-pin core.

2.8 EXIT DEVICES - HEAVY DUTY

A. Manufacturers and Products:
   1. Scheduled Manufacturer and Product: BEST Precision Apex 2000 series.
   2. Acceptable Manufacturers: Sargent 19-80 series, Von Duprin 98/35A series.

B. Requirements:
   1. Provide exit devices tested to ANSI/BHMA A156.3 Grade 1, and UL listed for Panic Exit or Fire Exit Hardware. Cylinders: Refer to “KEYING” article, herein.
   2. Exit Devices: Touchpad type, fabricated of brass, bronze, stainless steel, or aluminum, plated to standard architectural finishes to match balance of door hardware.

3. Touchpad: Extend minimum of one half of door width. Match exit device finish or provide compatible finish.
4. Provide devices with deadlatching feature for security and for future addition of alarm kits and other electrical requirements.
5. Provide manufacturer's standard strikes.
6. Provide exit devices cut to door width and height. Locate exit devices at height recommended by exit device manufacturer, allowable by governing building codes, and approved by Architect.
7. Mount mechanism case flush on face of doors or provide spacers to fill gaps behind devices. Where glass trim or molding projects off face of door, provide glass bead kits.
8. Provide cylinder dogging at non-fire-rated exit devices.
9. Where lever handles are specified as outside trim for exit devices, provide heavy-duty lever trims with forged or cast escutcheon plates. Provide vandal-resistant levers.
   a. Lever Style: Match lever style of locksets.
10. Provide UL labeled fire exit hardware for fire rated openings.
11. Field drill weep holes per manufacturer’s recommendation for exit devices used in full exterior application, highly corrosive areas, and where noted in the hardware sets.

2.9 CYLINDERS

A. Manufacturer and Product:
   1. Scheduled Manufacturer and Product: Best Standard.
   2. Acceptable Manufacturers: Schlage, Sargent.

B. Requirements: Provide cylinders/cores complying with the following requirements.
   1. Cylinders/cores compliant with ANSI/BHMA A156.5; latest revision, Section 12, Grade 1; permanent cylinders; cylinder face finished to match lockset, manufacturer’s series as indicated.

C. Full-sized cylinders with small format interchangeable cores (SFIC), in the below-listed configuration(s), distributed throughout the Project as indicated.
   1. Keying: Manufacturer-keyed permanent cylinders/cores, configured into keying system per “KEYING” article herein.
   2. Features: Cylinders/cores shall incorporate the following features.

D. Mark permanent cylinders/cores and keys with applicable blind code per DHI publication “Keying Systems and Nomenclature” for identification. Blind code marks shall not include actual key cuts.

E. Identification stamping provisions must be approved by the Architect and Owner.

F. Failure to comply with stamping requirements shall be cause for replacement of cylinders/cores involved at no additional cost to Owner.
   1. Forward cylinders/cores to Owner, separately from keys, by means as directed by Owner.

G. Project Cylinder/Core Distribution: Provide cylinders/cores complying with the following requirements in Project locations as indicated.

H. Replaceable Construction Cores.
   1. Provide temporary construction cores replaceable by permanent cores. Provide 12 operating keys for contractor use during construction.

I. Permanent Keyed Cores:
   1. Contractor to replace construction cores with permanent cores as directed by Owner. Installation will be in presence of owner representative, indicating keys operate locking hardware and to turn over all permanent keys.

2.10 KEYING

A. Keying System: Factory registered, complying with guidelines in ANSI/BHMA A156.28, incorporating decisions made at keying conference.

B. Keying Requirements – General for Commercial
   1. Permanent cylinders/cores keyed by the manufacturer according to the following key system.

C. Key Features: Provide keys with the following features.
   1. Patent Protection: Keys and blanks protected by a special broching in restricted keyway

D. Keys
   1. Material: Nickel silver; minimum thickness of .107-inch (2.3mm)
   2. Identification: Stamp all keys with keyset symbol
   3. Quantity of keys:
      a. Provide (2) operating keys per keyed core.
      b. Provide (6) Master Keys.
      c. Provide (2) Control Keys

E. Coordinate with cylinder/core and key identification requirements above.

F. Stamp keys with Owner's unique key system facility code as established by the manufacturer; key symbol and embossed or stamped with "DO NOT DUPLICATE".

G. Failure to comply with stamping requirements shall be cause for replacement of keys involved at no additional cost to Owner.

2.11 DOOR CLOSERS – HEAVY DUTY

A. Manufacturer and Product:
   1. Scheduled Manufacturer and Product: Dormakaba Commercial QDC100 series.
      a. Acceptable Manufacturers: Sargent 281 Series, LCN 4040 XP Series.

B. Requirements:
   1. Tested and approved by BHMA for ANSI 156.4, Grade 1.
   2. UL10C certified.
   3. Closer shall have extra-duty arms and knuckles.
   4. Conform to ANSI 117.1.
   5. Maximum 2 7/16" case projection with non-ferrous cover.
   6. Separate adjusting valves for closing and latching speed, and backcheck.
   7. Provide adapter plates, shim spacers and blade stop spacers as required by frame and door conditions.
   8. Full rack and pinion type closer with 1-1/2" minimum bore.
   9. Mount closers on non-public side of door, unless otherwise noted in specification.
   10. Closers shall be non-handed, non-sized and multi-sized.

2.12 DOOR CLOSERS - MEDIUM DUTY

A. Manufacturers and Products:
   1. Scheduled Manufacturer and Product: Dormakaba Commercial QDC200 series.
   2. Acceptable Manufacturers: LCN 1460 series, Norton 8501 series, Sargent 1430 series.

B. Requirements:
   1. Provide door closers conforming to ANSI/BHMA A156.4 Grade 1 requirements by BHMA certified independent testing laboratory. ISO 9000 certify closers. Stamp units with date of manufacture code.
   2. Provide door closers with fully hydraulic, full rack and pinion action.
   3. Hydraulic Fluid: Fireproof, passing requirements of UL10C, and requiring no seasonal closer adjustment for temperatures ranging from 120 degrees F to -30 degrees F.
   4. Spring Power: Continuously adjustable over full range of closer sizes and providing reduced opening force as required by accessibility codes and standards.
   5. Hydraulic Regulation: By tamper-proof, non-critical valves, with separate adjustment for latch speed, general speed, and backcheck.

6. Provide special templates, drop plates, mounting brackets, or adapters for arms as required for details, overhead stops, and other door hardware items interfering with closer mounting.

2.13 PROTECTION PLATES

A. Manufacturers:
   1. Scheduled Manufacturer: Trimco
   2. Acceptable Manufacturers: Burns, Don-Jo, Ives, Rockwood

B. Requirements:
   1. Provide kick plates, mop plates, and armor plates minimum of 1/8 inch thick as scheduled. Furnish with sheet metal or wood screws, finished to match plates.
   2. Sizes of plates:
      a. Kick Plates: 10 inches high by 2 inches less width of door on single doors, 1 inch less width of door on pairs

2.14 DOOR STOPS AND HOLDERS

A. Manufacturers:
   1. Scheduled Manufacturer: Trimco
   2. Acceptable Manufacturers: Burns, Don-Jo, Ives, Rockwood

B. Provide door stops at each door leaf:
   1. Provide wall stops wherever possible. Provide convex type where mortise type locks are used and concave type where cylindrical type locks are used.
   2. Where a wall stop cannot be used, provide universal floor stops for low or high rise options.
   3. Where wall or floor stop cannot be used, provide medium duty surface mounted overhead stop.

2.15 THRESHOLDS, SEALS, DOOR SWEEPS, AND GASKETING

A. Manufacturers:
   1. Scheduled Manufacturer: National Guard
   2. Acceptable Manufacturers: Pemko, Reese, Zero International

B. Requirements:
   1. Provide thresholds, weatherstripping (including door sweeps, seals, astragals) and gasketing systems (including smoke, sound, and light) as specified and per architectural details. Match finish of other items.
   2. Size of thresholds:
      a. Saddle Thresholds: 1/2” high by jamb width by door width
      b. Bumper Seal Thresholds: 1/2” high by 5” wide by door width
   3. Provide door sweeps, seals, astragals, and auto door bottoms only of type where resilient or flexible seal strip is easily replaceable and readily available.

2.16 SILENCERS

A. Manufacturers:
   1. Scheduled Manufacturer: Trimco
   2. Acceptable Manufacturers: Burns, Don-Jo, Ives, Rockwood

B. Requirements:
   1. Provide "push-in" type silencers for hollow metal or wood frames.
   2. Provide one silencer per 30 inches of height on each single frame, and two for each pair frame.
   3. Omit where gasketing is specified.

2.17 DOOR VIEWERS

A. Door Viewer: 150 degree angle, one-way, solid brass body with glass lens.
   1. Scheduled Manufacturer: Ives U696 B, UL Listed or comparable product.
   2. Acceptable Manufacturers: Ives, Rockwood

2.18 KEY CONTROL CABINET

A. Manufacturers:
   1. Telkee, Lund, MMF.

B. Key Control Cabinet: Provide one wall mounted key cabinet complete with hooks, index and tags to accommodate 50% expansion. Coordinate mounting location with architect.

2.19 FINISH

A. Designations used in Schedule of Finish Hardware - 3.7, and elsewhere to indicate hardware finishes are those listed in ANSI/BHMA A156.18 including coordination with traditional U.S. finishes shown by certain manufacturers for their products

B. Powder coat door closers to match other hardware, unless otherwise noted.

C. Aluminum items shall be finished to match predominant adjacent material. Gasketing to coordinate with frame color.

PART 3 - EXECUTION

3.1 EXAMINATION

A. Prior to installation of hardware, examine doors and frames, with Installer present, for compliance with requirements for installation tolerances, labeled fire-rated door assembly construction, wall and floor construction, and other conditions affecting performance.

B. Existing Door and Frame Compatibility: Field verify existing doors and frames receiving new hardware and existing conditions receiving new openings. Verify that new hardware is compatible with existing door and frame preparation and existing conditions.

C. Examine roughing-in for electrical power systems to verify actual locations of wiring connections before electrified door hardware installation.

D. Proceed with installation only after unsatisfactory conditions have been corrected.

3.2 PREPARATION

A. Where on-site modification of doors and frames is required:
   1. Carefully remove existing door hardware and components being reused. Clean, protect, tag, and store in accordance with storage and handling requirements specified herein.
   2. Field modify and prepare existing door and frame for new hardware being installed.
   3. When modifications are exposed to view, use concealed fasteners, when possible.
   4. Prepare hardware locations and reinstall in accordance with installation requirements for new door hardware and with:
      a. Steel Doors and Frames: For surface applied door hardware, drill and tap doors and frames according to ANSI/SDI A250.6.
      b. Wood Doors: DHI WDHS.5 "Recommended Hardware Reinforcement Locations for Mineral Core Wood Flush Doors."
      c. Doors in rated assemblies: NFPA 80 for restrictions on on-site door hardware preparation.

3.3 INSTALLATION

A. Mounting Heights: Mount door hardware units at heights to comply with the following, unless otherwise indicated or required to comply with governing regulations.
   1. Standard Steel Doors and Frames: ANSI/SDI A250.8.
   2. Custom Steel Doors and Frames: HMMA 831.
   3. Wood Doors: DHI WDHS.3, "Recommended Locations for Architectural Hardware for Wood Flush Doors."

B. Install each hardware item in compliance with manufacturer's instructions and recommendations, using only fasteners provided by manufacturer.

C. Do not install surface mounted items until finishes have been completed on substrate. Protect all installed hardware during painting.

D. Set units level, plumb and true to line and location. Adjust and reinforce attachment substrate as necessary for proper installation and operation.

E. Drill and countersink units that are not factory prepared for anchorage fasteners. Space fasteners and anchors according to industry standards.

F. Install operating parts so they move freely and smoothly without binding, sticking, or excessive clearance.

G. Hinges: Install types and in quantities indicated in door hardware schedule but not fewer than quantity recommended by manufacturer for application indicated or one hinge for every 30 inches of door height, whichever is more stringent, unless other equivalent means of support for door, such as spring hinges or pivots, are provided.

H. Lock Cylinders: Install construction cores to secure building and areas during construction period.
   1. Replace construction cores with permanent cores as indicated in keying section.

I. Door Closers: Mount closers on room side of corridor doors, inside of exterior doors, and stair side of stairway doors from corridors. Closers shall not be visible in corridors, lobbies and other public spaces unless approved by Architect.

J. Thresholds: Set thresholds in full bed of sealant complying with requirements specified in Division 07 Section "Joint Sealants."

K. Stops: Provide floor stops for doors unless wall or other type stops are indicated in door hardware schedule. Do not mount floor stops where they may impede traffic or present tripping hazard.

L. Perimeter Gasketing: Apply to head and jamb, forming seal between door and frame.

M. Meeting Stile Gasketing: Fasten to meeting stiles, forming seal when doors are closed.

N. Door Bottoms: Apply to bottom of door, forming seal with threshold when door is closed.

3.4 ADJUSTING

A. Initial Adjustment: Adjust and check each operating item of door hardware and each door to ensure proper operation or function of every unit. Replace units that cannot be adjusted to operate as intended. Adjust door control devices to compensate for final operation of heating and ventilating equipment and to comply with referenced accessibility requirements.
   1. Spring Hinges: Adjust to achieve positive latching when door is allowed to close freely from an open position of 30 degrees.
   2. Electric Strikes: Adjust horizontal and vertical alignment of keeper to properly engage lock bolt.
   3. Door Closers: Adjust sweep period to comply with accessibility requirements and requirements of authorities having jurisdiction.

B. Occupancy Adjustment: Approximately three months after date of Substantial Completion, Installer's Architectural Hardware Consultant shall examine and readjust each item of door hardware, including

adjusting operating forces, as necessary to ensure function of doors, door hardware, and electrified door hardware.

3.5 CLEANING AND PROTECTION

A. Clean adjacent surfaces soiled by door hardware installation.

B. Clean operating items as necessary to restore proper function and finish.

C. Provide final protection and maintain conditions that ensure door hardware is without damage or deterioration at time of Substantial Completion.

3.6 DEMONSTRATION

A. Provide training for Owner's maintenance personnel to adjust, operate, and maintain door hardware and door hardware finishes. Refer to Division 01 Section "Demonstration and Training."

3.7 DOOR HARDWARE SCHEDULE

A. Locksets, exit devices, and other hardware items are referenced in the following hardware sets for series, type and function. Refer to the above specifications for special features, options, cylinders/keying, and other requirements.

Manufacturer List

Code	Name
AB	ABH Manufacturing Inc.
BE	Best Access Systems
BY	By Others
IV	Ives
NA	National Guard
PR	BEST Precision Exit Devices
RO	Rockwood
SH	dormakaba Commercial Hardware
ST	BEST Hinges and Sliding
TR	Trimco

Finish List

Code	Description
AL	Aluminum
26D	Satin Chrome
626	Satin Chromium Plated
630	Satin Stainless Steel
689	Aluminum Painted
626W	Weatherized Satin Chrome
630W	Stainless Steel, Weatherized
US26D	Chromium Plated, Dull

Option List

Code	Description
F	Full Size Cover
H	Hurricane Compliant
R	Full Size Rounded Plastic Cover
BF	Barrier Free
BF	BF Keyway (SFIC)
CD	Cylinder Dogging
HC	Hurricane Code Device
SN	Sex Nuts
3RO	Prefix option for 2000 Apex Series
CSK	Counter Sinking of Kick Plates
DBS	Standard Deadbolt Strike
FLR	Full Lip Strike - Round
FS4	2 3/4 BS - 3/4" Throw - Sq.Crn.
478S	4 7/8" ANSI Strike
S460	Standard Bottom Strike - SVR & CVR
S519	Standard Top Strike - CVR
S/TAP	Self Tapping Screws
SSMS/LA	Stainless Machine Screws/Lead Anchor

Hardware Sets

SET #01 - Ext - Pair - Fire Alarm

Doors: 206, 407

6	Butt Hinge	CB191 4.5" x 4.5" NRP	630W	ST
2	Extension Flush Bolt	556WS	US26D	RO
1	Dust Proof Strike	1870	US26D	AB
1	Deadbolt	QDB281 BF DBS H	626	SH
1	Passage Set	QCL230 M 478S H	626	SH
2	Door Closer	QDC213 F SN	689	SH
1	Drip Cap	16 A 4"ODW		NA
1	Gasketing	700 EN (Head & Jamb)		NA
2	Door Sweep	200 NA		NA
1	Threshold	896 N SSMS/LA	AL	NA

SET #02 - Int - Sgl - Clubhouse RR

Doors: 00.06

3	Butt Hinge	FBB179 4.5" x 4.5"	26D	ST
1	Privacy Set	QCL240 M 478S	626	SH
1	Door Closer	QDC211 BF F SN	689	SH
1	Kick Plate	K0050 10" x 2" LDW CSK	630	TR
1	Wall Bumper	1270WV	630	TR
1	Wardrobe Hook	582 B	26D	IV
3	Silencer	1229A	GREY	TR

SET #03 - Int - Sgl - Clubhouse - Janitor

Doors: 00.07

3	Butt Hinge	FBB179 4.5" x 4.5"	26D	ST
1	Passage Set	QCL230 M 478S	626	SH
1	Door Closer	QDC213 F SN	689	SH
1	Gasketing	5050 C (Head & Jamb)		NA

SET #04 - Int - Sgl - Clubhouse - Closet / Storage

Doors: 00.04, 00.11

3	Butt Hinge	FBB179 4.5" x 4.5"	26D	ST
1	Classroom Lockset	QCL261 M 478S BF	626	SH
1	Wall Bumper	1270WV	630	TR
3	Silencer	1229A	GREY	TR

SET #05 - Int - Sgl - Clubhouse - Office

Doors: 00.03, 00.10

3	Butt Hinge	FBB179 4.5" x 4.5"	26D	ST
1	Classroom Lockset	QCL261 M 478S BF	626	SH
1	Wall Bumper	1270WV	630	TR
1	Gasketing	5050 C (Head & Jamb)		NA

SET #06 - Int - Sgl - Clubhouse Fitness - Alum

Doors: 00.02

3	Butt Hinge	FBB179 4.5" x 4.5"	26D	ST
1	Door Pull	1731 33"	630	TR
1	Door Closer	QDC211 F S/TAP	689	SH
1	Wall Bumper	1270WV	630	TR
1	Drop Plate	8Q00471 w/Screw Pack	689	SH
1	Gasketing	5050 C (Head & Jamb)		NA

SET #07 - Ext - Sgl - Clubhouse RR

Doors: 00.05

3	Butt Hinge	CB199 4.5" x 4.5" NRP	630W	ST
1	Deadbolt	QDB287 478S BF H	626	SH
1	Passage Set	QCL230 M 478S FS4 H	626	SH
1	Door Closer	QDC111 R SN	689	SH
1	Wall Bumper	1270WV	630	TR
1	Gasketing	700 EN (Head & Jamb)		NA
1	Door Sweep	200 NA		NA
1	Saddle Threshold	425 SSMS/LA	AL	NA

SET #08 - Ext - Sgl - Clubhouse Mech

Doors: 00.09

3	Butt Hinge	CB191 4.5" x 4.5" NRP	630W	ST
1	Deadbolt	QDB287 478S BF H	626	SH
1	Passage Set	QCL230 M 478S FS4 H	626	SH
1	Door Closer	QDC213 F SN	689	SH
1	Gasketing	700 EN (Head & Jamb)		NA
1	Door Sweep	200 NA		NA
1	Threshold	896 N SSMS/LA	AL	NA

SET #09 - Ext - Pair - Clubhouse Entry

Doors: 00.01A, 00.01B

6	Butt Hinge	CB199 4.5" x 4.5" NRP	630W	ST
1	Exit Device	3RO HC 2802 X 4902D CD S460 S519	626W	PR
1	Exit Device	3RO HC 2803 X 4903D CD S460 S519	626W	PR
2	Mortise Cylinder	1E-74 STD	626	BE
1	Rim Cylinder	12E-72 STD	626	BE
2	Door Closer	QDC113 R S/TAP	689	SH
2	Kick Plate	K0050 10" x 2" LDW CSK	630	TR
1	Astragal Set (Brush)	672 A (Set)		NA
1	Gasketing	700 EN (Head & Jamb)		NA
2	Door Sweep	200 NA		NA
1	Saddle Threshold	425 SSMS/LA	AL	NA

SET #U-1 - Unit Entry

Doors: UNIT ENTRY

3	Butt Hinge	CB191 4.5" x 4.5" NRP	630W	ST
1	Deadbolt	QDB281 BF DBS H	626	SH
1	Passage Set	QCL230 M 478S FS4 H	626	SH
1	Floor Stop	1214CK	626	TR
1	Door Viewer	U696 B	626	IV
1	Gasketing	5050 C (Head & Jamb)		NA
1	Door Sweep	200 NA		NA
1	Threshold	896 N SSMS/LA	AL	NA

SET #U-2 - Unit Bedroom

Doors: BDRM

3	Hinges	By Pre-hung Door Manufacturer	626	BY
1	Privacy Set	QTL240 M FLR	626	SH
1	Base/Hinge Stop	1235/1240	626	TR
3	Silencer	1229B	GREY	TR

SET #U-3 - Unit Bathroom

Doors: BATH

3	Hinges	By Pre-hung Door Manufacturer	626	BY
1	Privacy Set	QTL240 M FLR	626	SH
1	Base/Hinge Stop	1235/1240	626	TR
1	Wardrobe Hook	582 B	26D	IV
3	Silencer	1229B	GREY	TR

SET #U-4 - Unit Closet

Doors: CLO SWING

3	Hinges	By Pre-hung Door Manufacturer	626	BY
1	Passage Set	QTL230 M FLR	626	SH
1	Base/Hinge Stop	1235/1240	626	TR
3	Silencer	1229B	GREY	TR

SET #U-5 - Unit - Sgl - Closet Bi-Fold

Doors: SGL BIFOLD

1	Pull	562-4	626	TR
1	Bi-Fold Hardware Set	SLAL-75-BF2DR x Size		NA

SET #U-6 - Unit - Pair - Closet Bi-Fold

Doors: PAIR BI-FOLD

2	Pull	562-4	626	TR
1	Bi-Fold Hardware Set	SLAL-75-BF4DR x Size		NA

SET #U-7 - Unit - Sliding Patio

Doors: SLIDING PATIO

	Hardware	All Hardware By Door Mfr.		BY

END OF SECTION 087100

SECTION 088000 - GLAZING

PART 1 - GENERAL

1.1 SUMMARY

A. Section includes glazing for doors and windows.

1.2 ACTION SUBMITTALS

A. Product Data: For each glass product and glazing material indicated.

B. Glazing Schedule: List glass types and thicknesses for each size opening and location. Use same designations indicated on Drawings.

1.3 QUALITY ASSURANCE

A. Glazing Publications: Comply with published recommendations of glass product manufacturers and organizations below, unless more stringent requirements are indicated. Refer to these publications for glazing terms not otherwise defined in this Section or in referenced standards.
   1. NGA Publications: “GANA Glazing Manual."
   2. IGMA Publication for Insulating Glass: SIGMA TM-3000, "North American Glazing Guidelines for Sealed Insulating Glass Units for Commercial and Residential Use."

B. Safety Glazing Labeling: Where safety glazing labeling is indicated, permanently mark glazing with certification label of the SGCC. Label shall indicate manufacturer's name, type of glass, thickness, and safety glazing standard with which glass complies.

1.4 INFORMATIONAL SUBMITTALS

A. Qualification Data: For Installer.

B. Product Certificates: For glass.

C. Sample Warranties: For special warranties.

1.5 DELIVERY, STORAGE, AND HANDLING

A. Protect glazing materials in accordance with manufacturer's written instructions. Prevent damage to glass and glazing materials from condensation, temperature changes, direct exposure to sun, or other causes.

1.6 FIELD CONDITIONS

A. Environmental Limitations: Do not proceed with glazing when ambient and substrate temperature conditions are outside limits permitted by glazing material manufacturers and when glazing channel substrates are wet from rain, frost, condensation, or other causes.

1.7 WARRANTY

A. Manufacturer's Special Warranty on Insulating Glass: Manufacturer's standard form in which insulating-glass manufacturer agrees to replace insulating-glass units that deteriorate within specified warranty period. Deterioration of insulating glass is defined as failure of hermetic seal under normal use that is not attributed to glass breakage or to maintaining and cleaning insulating glass contrary to manufacturer's written instructions. Evidence of failure is the obstruction of vision by dust, moisture, or film on interior surfaces of glass.
   1. Warranty Period: 10 years from date of Substantial Completion.

PART 2 - PRODUCTS

2.1 GLASS PRODUCTS, GENERAL

A. Strength: Where float glass is indicated, provide annealed float glass, Kind HS heat-treated float glass, or Kind FT heat-treated float glass. Where heat-strengthened glass is indicated, provide Kind HS heat-treated float glass or Kind FT heat-treated float glass. Where fully tempered glass is indicated, provide Kind FT heat-treated float glass.

2.2 GLASS PRODUCTS

A. Float Glass: ASTM C1036, Type I, Quality-Q3, Class I (clear)

B. Heat-Treated Float Glass: ASTM C1048; Type I; Quality-Q3; Class I (clear); of kind and condition indicated.

C. Manufacturers: One of the following:
   1. Cardinal IG.
   2. Viracon.
   3. Vitro Architectural Glass.

2.3 INSULATING GLASS

A. Insulating-Glass Units: Factory-assembled units consisting of sealed lites of glass separated by a dehydrated interspace, qualified according to ASTM E2190, and complying with other requirements specified.

1. Sealing System: Dual seal.
2. Spacer: Manufacturer's standard spacer material and construction.

2.4 GLAZING GASKETS

A. Dense Compression Gaskets: Molded or extruded gaskets of profile and hardness required to maintain watertight seal.

B. Soft Compression Gaskets: Extruded or molded, closed-cell, integral-skinned neoprene gaskets complying with ASTM C509, Type II, black; of profile and hardness required to maintain watertight seal.

2.5 GLAZING TAPES

A. Back-Bedding Mastic Glazing Tapes: Preformed, butyl-based, 100 percent solids elastomeric tape; nonstaining and nonmigrating in contact with nonporous surfaces; with or without spacer rod as recommended in writing by tape and glass manufacturers for application indicated; and complying with ASTM C1281 and AAMA 800.

2.6 MISCELLANEOUS GLAZING MATERIALS

A. Cleaners, Primers, and Sealers: Types recommended by sealant or gasket manufacturer.

B. Setting Blocks: Elastomeric material with a Shore, Type A durometer hardness of 85, plus or minus 5.

C. Spacers: Elastomeric blocks or continuous extrusions of hardness required by glass manufacturer to maintain glass lites in place for installation indicated.

D. Edge Blocks: Elastomeric material of hardness needed to limit glass lateral movement (side walking).

2.7 INSULATING-GLASS TYPES

A. Glass Type: Low-e-coated, clear insulating glass.
1. Overall Unit Thickness: 1 inch, unless otherwise indicated or specified.
2. Thickness of Each Glass Lite: 6.0 mm, unless otherwise required by door or window manufacturer.
3. Outdoor Lite: Fully tempered float glass.
4. Interspace Content: Air.
5. Indoor Lite: Heat-strengthened float glass.
6. Low-E Coating: Sputtered on second surface.
7. Provide safety glazing labeling.

PART 3 - EXECUTION

3.1 EXAMINATION

A. Examine framing, glazing channels, and stops, with Installer present, for compliance with the following:

1. Manufacturing and installation tolerances, including those for size, squareness, and offsets at corners.
2. Presence and functioning of weep systems.
3. Minimum required face and edge clearances.
4. Effective sealing between joints of glass-framing members.

B. Proceed with installation only after unsatisfactory conditions have been corrected.

3.2 GLAZING, GENERAL

A. Comply with combined written instructions of manufacturers of glass, sealants, gaskets, and other glazing materials, unless more stringent requirements are indicated, including those in referenced glazing publications.

B. Protect glass edges from damage during handling and installation. Remove damaged glass from Project site and legally dispose of off Project site. Damaged glass is glass with edge damage or other imperfections that, when installed, could weaken glass and impair performance and appearance.

C. Install setting blocks in sill rabbets, sized and located to comply with referenced glazing publications, unless otherwise required by glass manufacturer. Set blocks in thin course of compatible sealant suitable for heel bead.

D. Do not exceed edge pressures stipulated by glass manufacturers for installing glass lites.

E. Provide spacers for glass lites where length plus width is larger than 50 inches.

F. Provide edge blocking where indicated or needed to prevent glass lites from moving sideways in glazing channel, as recommended in writing by glass manufacturer and according to requirements in referenced glazing publications.

3.3 TAPE GLAZING

A. Position tapes on fixed stops so that, when compressed by glass, their exposed edges are flush with or protrude slightly above sightline of stops.

B. Install tapes continuously, but not necessarily in one continuous length. Do not stretch tapes to make them fit opening.

C. Cover vertical framing joints by applying tapes to heads and sills first and then to jambs. Cover horizontal framing joints by applying tapes to jambs and then to heads and sills.

D. Place joints in tapes at corners of opening with adjoining lengths butted together, not lapped. Seal joints in tapes with compatible sealant approved by tape manufacturer.

E. Center glass lites in openings on setting blocks and press firmly against tape by inserting dense compression gaskets formed and installed to lock in place against faces of removable stops. Start gasket applications at corners and work toward centers of openings.

3.4 GASKET GLAZING (DRY)

A. Cut compression gaskets to lengths recommended by gasket manufacturer to fit openings exactly, with allowance for stretch during installation.

B. Insert soft compression gasket between glass and frame or fixed stop so it is securely in place with joints miter cut and bonded together at corners.

C. Install gaskets so they protrude past face of glazing stops.

3.5 CLEANING AND PROTECTION

A. Immediately after installation, remove nonpermanent labels and clean surfaces.

B. Remove and replace glass that is broken, chipped, cracked, or abraded or that is damaged from natural causes, accidents, and vandalism, during construction period.

END OF SECTION 088000

SECTION 092216 - NON-STRUCTURAL METAL FRAMING

PART 1 - GENERAL

1.1 SUMMARY

A. Section Includes:
   1. Non-load-bearing steel framing systems for interior gypsum board assemblies.
   2. Suspension systems for interior gypsum ceilings, soffits, and grid systems.

1.2 ACTION SUBMITTALS

A. Product Data: For each type of product.

PART 2 - PRODUCTS

2.1 PERFORMANCE REQUIREMENTS

A. Fire-Test-Response Characteristics: For fire-resistance-rated assemblies that incorporate non-load-bearing steel framing, provide materials and construction identical to those tested in assembly indicated, according to ASTM E 119 by an independent testing agency.

B. STC-Rated Assemblies: For STC-rated assemblies, provide materials and construction identical to those tested in assembly indicated, according to ASTM E 90 and classified according to ASTM E 413 by an independent testing agency.

2.2 FRAMING SYSTEMS

A. Framing Members, General: Comply with ASTM C 754 for conditions indicated.
   1. Steel Sheet Components: Comply with ASTM C 645 requirements for metal unless otherwise indicated.
   2. Protective Coating: ASTM A 653/A 653M, G40, hot-dip galvanized unless otherwise indicated.

B. Studs and Runners: ASTM C 645.
   1. Steel Studs and Runners:
      a. Minimum Base-Metal Thickness: As indicated on Drawings.
      b. Depth: As indicated on Drawings.

C. Slip-Type Head Joints: Where indicated, provide the following:
   1. Single Long-Leg Runner System: ASTM C 645 top runner with 2-inch deep flanges in thickness not less than indicated for studs, installed with studs friction fit into top runner and with continuous bridging located within 12 inches of the top of studs to provide lateral bracing.

D. Hat-Shaped, Rigid Furring Channels: ASTM C 645.
   1. Minimum Base-Metal Thickness: As indicated on Drawings.
   2. Depth: As indicated on Drawings.

E. Resilient Furring Channels: 1/2-inch deep, steel sheet members designed to reduce sound transmission.
   1. Configuration: Asymmetrical.

2.3 SUSPENSION SYSTEMS

A. Tie Wire: ASTM A 641/A 641M, Class 1 zinc coating, soft temper, 0.062-inch diameter wire, or double strand of 0.048-inch diameter wire.

B. Wire Hangers: ASTM A 641/A 641M, Class 1 zinc coating, soft temper, 0.16 inch in diameter.

C. Carrying Channels: Cold-rolled, commercial-steel sheet with a base-metal thickness of 0.053 inch and minimum 1/2-inch) wide flanges.
   1. Depth: As indicated on Drawings.
   2. Hat-Shaped, Rigid Furring Channels: ASTM C 645, 7/8 inch deep.
      a. Minimum Base-Metal Thickness: As indicated on Drawings.

D. Grid Suspension System for Gypsum Board Ceilings: ASTM C 645, direct-hung system composed of main beams and cross-furring members that interlock.
   1. Products: Provide one of the following:
      a. Armstrong World Industries, Inc.; Drywall Grid Systems.
      b. Rockfon; Drywall Grid System.
      c. USG Corporation; Drywall Suspension System.

2.4 AUXILIARY MATERIALS

A. General: Provide auxiliary materials that comply with referenced installation standards.
   1. Fasteners for Metal Framing: Of type, material, size, corrosion resistance, holding power, and other properties required to fasten steel members to substrates.

B. Isolation Strip at Exterior Walls: Provide one of the following:
   1. Asphalt-Saturated Organic Felt: ASTM D 226, Type I (No. 15 asphalt felt), nonperforated.

2. Foam Gasket: Adhesive-backed, closed-cell vinyl foam strips that allow fastener penetration without foam displacement, 1/8 inch thick, in width to suit steel stud size.

PART 3 - EXECUTION

3.1 EXAMINATION

A. Examine areas and substrates, with Installer present, and including welded hollow-metal frames, cast-in anchors, and structural framing, for compliance with requirements and other conditions affecting performance of the Work.

B. Proceed with installation only after unsatisfactory conditions have been corrected.

3.2 PREPARATION

A. Suspended Assemblies: Coordinate installation of suspension systems with installation of overhead structure to ensure that inserts and other provisions for anchorages to building structure have been installed to receive hangers at spacing required to support the Work and that hangers will develop their full strength.

3.3 INSTALLATION, GENERAL

A. Installation Standard: ASTM C 754.
1. Gypsum Board Assemblies: Also comply with requirements in ASTM C 840 that apply to framing installation.

B. Install supplementary framing, and blocking to support fixtures, equipment services, heavy trim, grab bars, toilet accessories, furnishings, or similar construction.

C. Install bracing at terminations in assemblies.

3.4 INSTALLING FRAMED ASSEMBLIES

A. Install framing system components according to spacings indicated, but not greater than spacings required by referenced installation standards for assembly types.

B. Where studs are installed directly against exterior masonry walls or dissimilar metals at exterior walls, install isolation strip between studs and exterior wall.

C. Install studs so flanges within framing system point in same direction.

D. Install tracks (runners) at floors and overhead supports. Extend framing full height to structural supports or substrates above suspended ceilings except where partitions are

indicated to terminate at suspended ceilings. Continue framing around ducts penetrating partitions above ceiling.

1. Slip-Type Head Joints: Where framing extends to overhead structural supports, install to produce joints at tops of framing systems that prevent axial loading of finished assemblies.
2. Door Openings: Screw vertical studs at jambs to jamb anchor clips on door frames; install runner track section (for cripple studs) at head and secure to jamb studs.
   a. Install two studs at each jamb unless otherwise indicated.
   b. Extend jamb studs through suspended ceilings and attach to underside of overhead structure.
3. Other Framed Openings: Frame openings other than door openings the same as required for door openings unless otherwise indicated. Install framing below sills of openings to match framing required above door heads.
4. Fire-Resistance-Rated Partitions: Install framing to comply with fire-resistance-rated assembly indicated and support closures and to make partitions continuous from floor to underside of solid structure.
   a. Firestop Track: Where indicated, install to maintain continuity of fire-resistance-rated assembly indicated.
5. Sound-Rated Partitions: Install framing to comply with sound-rated assembly indicated.

E. Direct Furring:
1. Screw to wood framing.
2. Attach to concrete or masonry with stub nails, screws designed for masonry attachment, or powder-driven fasteners spaced 24 inches o.c.

F. Installation Tolerance: Install each framing member so fastening surfaces vary not more than 1/8 inch from the plane formed by faces of adjacent framing.

3.5 INSTALLING SUSPENSION SYSTEMS

A. Install suspension system components according to spacings indicated, but not greater than spacings required by referenced installation standards for assembly types.
1. Hangers: 48 inches o.c.
2. Carrying Channels (Main Runners): 48 inches o.c.
3. Furring Channels (Furring Members): 16 inches o.c.

B. Isolate suspension systems from building structure where they abut or are penetrated by building structure to prevent transfer of loading imposed by structural movement.

C. Suspend hangers from building structure as follows:
1. Install hangers plumb and free from contact with insulation or other objects within ceiling plenum that are not part of supporting structural or suspension system.
   a. Splay hangers only where required to miss obstructions and offset resulting horizontal forces by bracing, countersplaying, or other equally effective means.

2. Where width of ducts and other construction within ceiling plenum produces hanger spacings that interfere with locations of hangers required to support standard suspension system members, install supplemental suspension members and hangers in the form of trapezes or equivalent devices.
   a. Size supplemental suspension members and hangers to support ceiling loads within performance limits established by referenced installation standards.
3. Wire Hangers: Secure by looping and wire tying, either directly to structures or to inserts, eye screws, or other devices and fasteners that are secure and appropriate for substrate, and in a manner that will not cause hangers to deteriorate or otherwise fail.
4. Do not connect or suspend steel framing from ducts, pipes, or conduit.

D. Grid Suspension Systems: Attach perimeter wall track or angle where grid suspension systems meet vertical surfaces. Mechanically join main beam and cross-furring members to each other and butt-cut to fit into wall track.

E. Installation Tolerances: Install suspension systems that are level to within 1/8 inch in 12 feet measured lengthwise on each member that will receive finishes and transversely between parallel members that will receive finishes.

END OF SECTION 092216

SECTION 092400 - PORTLAND CEMENT PLASTERING

PART 1 - GENERAL

1.1 SUMMARY

A. Section Includes:
   1. Exterior portland cement over CMU substrates.

1.2 ACTION SUBMITTALS

A. Product Data: For each type of product indicated.

1.3 PROJECT CONDITIONS

A. Comply with ASTM C926 requirements.

PART 2 - PRODUCTS

2.1 ACCESSORIES

A. General: Comply with ASTM C1063 and coordinate depth of trim and accessories with thicknesses and number of plaster coats required.

B. Plastic Accessories: Fabricated from high-impact PVC.
   1. Acceptable Manufacturers:
      a. Alabama Metal Industries Corporation.
      b. Clarkwestern Dietrich Building Systems.
      c. Plastic Components, Inc.
      d. Vinyl Corp.
   2. Cornerbeads: With perforated flanges.
      a. Small-nose style.
   3. Casing Beads: With perforated flanges in depth required to suit plaster bases indicated and flange length required to suit applications indicated.
      a. Square-edge style.
   4. Control Joints: One-piece-type, folded pair of unperforated screeds in M-shaped configuration; with perforated flanges and removable protective tape on plaster face of control joint.

2.2 MISCELLANEOUS MATERIALS

A. Water for Mixing: Potable and free of substances capable of affecting plaster set or of damaging plaster, lath, or accessories.

B. Fiber for Base Coat: Alkaline-resistant glass or polypropylene fibers, 1/2 inch long, free of contaminants, manufactured for use in portland cement plaster.

C. Bonding Compound: ASTM C932.

D. Patching Compound: Elastomeric patching compound as recommended by elastomeric coating manufacturer.

2.3 PLASTER MATERIALS

A. Portland Cement: ASTM C150, Type I.
   1. Color for Finish Coats: Standard grey.

B. Lime: ASTM C206, Type S; or ASTM C207, Type S.

C. Sand Aggregate: ASTM C897.
   1. Color for Job-Mixed Finish Coats: Standard grey.

2.4 PLASTER MIXES

A. General: Comply with ASTM C926 for applications indicated.
   1. Fiber Content: Add fiber to base-coat mixes after ingredients have mixed at least two minutes. Comply with fiber manufacturer's written instructions for fiber quantities in mixes, but do not exceed 1 lb of fiber/cu. yd. of cementitious materials.

B. Base-Coat Mixes: Single base coats for two-coat plasterwork as follows:
   1. Portland Cement Mix: For cementitious material, mix 1 part portland cement and 0 to 3/4 part lime. Use 2-1/2 to 4 parts aggregate per part of cementitious material.

C. Job-Mixed Finish-Coat Mixes:
   1. Portland Cement Mix: For cementitious materials, mix 1 part portland cement and 3/4 to 1-1/2 parts lime. Use 1-1/2 to 3 parts aggregate per part of cementitious material.

PART 3 - EXECUTION

3.1 SURFACE PREPARATION

A. Protect adjacent work from soiling, spattering, moisture deterioration, and other harmful effects caused by plastering.

B. Prepare solid substrates for plaster that are smooth or that do not have the suction capability required to bond with plaster according to ASTM C926.

C. Clean to remove all dust, dirt, oil, grease, loose particles, chalk, and similar surface contamination.

3.2 INSTALLING ACCESSORIES

A. Install according to ASTM C1063 and at locations indicated on Drawings.

B. Provide sealant (compatible with elastomeric coating) at all control joint intersections and terminations and at all other accessories as required.

C. Reinforcement for External Corners: Install cornerbead.

D. Control Joints: Install control joints at locations indicated on Drawings.

3.3 PLASTER APPLICATION

A. General: Comply with ASTM C926.

B. Walls; Base-Coat Mix: For base (scratch) coat, for two-coat plasterwork and having 3/8-inch thickness.

C. Plaster Finish Coats: Apply to provide float finish.

3.4 PLASTER REPAIRS

A. Repair or replace work to eliminate cracks, dents, blisters, buckles, crazing and check cracking, dry outs, efflorescence, sweat outs, and similar defects and where bond to substrate has failed.

END OF SECTION 092400

SECTION 092900 - GYPSUM BOARD

PART 1 - GENERAL

1.1 SUMMARY

A. Section Includes:
   1. Interior gypsum board.
   2. Exterior gypsum board ceilings and soffits.
   3. Tile backing panels.

1.2 ACTION SUBMITTALS

A. Product Data: For each type of product.

1.3 DELIVERY, STORAGE AND HANDLING

A. Store materials inside under cover and keep them dry and protected against weather, condensation, direct sunlight, construction traffic, and other potential causes of damage. Stack panels flat and supported on risers on a flat platform to prevent sagging.

1.4 FIELD CONDITIONS

A. Environmental Limitations: Comply with ASTM C840 requirements or gypsum board manufacturer's written instructions, whichever are more stringent.

B. Do not install paper-faced gypsum panels until installation areas are enclosed and conditioned.

C. Do not install panels that are wet, moisture damaged, and mold damaged.
   1. Indications that panels are wet or moisture damaged include, but are not limited to, discoloration, sagging, or irregular shape.
   2. Indications that panels are mold damaged include, but are not limited to, fuzzy or splotchy surface contamination and discoloration.

PART 2 - PRODUCTS

2.1 PERFORMANCE REQUIREMENTS

A. Fire-Resistance-Rated Assemblies: For fire-resistance-rated assemblies, provide materials and construction identical to those tested in assembly indicated according to ASTM E119 by an independent testing agency.

B. STC-Rated Assemblies: For STC-rated assemblies, provide materials and construction identical to those tested in assembly indicated according to ASTM E90 and classified according to ASTM E413 by an independent testing agency.

2.2 INTERIOR GYPSUM BOARD

A. Manufacturers: One of the following:
1. CertainTeed Corp.
2. Georgia-Pacific Gypsum LLC.
3. Lafarge North America Inc.
4. National Gypsum Company.
5. USG Corporation.

B. Gypsum Wallboard: ASTM C1396/C1396M.
1. Thickness: 1/2 inch.
2. Long Edges: Tapered.

C. Gypsum Board, Type X: ASTM C1396/C1396M.
1. Thickness: 5/8 inch.
2. Long Edges: Tapered.

D. Gypsum Ceiling Board: ASTM C1396/C1396M.
1. Thickness: 1/2 inch.
2. Long Edges: Tapered.

2.3 EXTERIOR GYPSUM BOARD FOR CEILINGS AND SOFFITS

A. Manufacturers: One of the following:
1. CertainTeed Corp.
2. Georgia-Pacific Gypsum LLC.
3. Lafarge North America Inc.
4. National Gypsum Company.
5. USG Corporation.

B. Exterior Gypsum Soffit Board: ASTM C1396/C1396M, with manufacturer's standard edges.
1. Core: 5/8 inch, Type X.

2.4 TILE BACKING PANELS

A. Glass-Mat, Water-Resistant Backing Board: ASTM C1178/C1178M, with manufacturer's standard edges.
1. Product: One of the following:
   a. CertainTeed Corp.; GlasRoc Tile Backer.
   b. Georgia-Pacific Gypsum LLC; DensShield Tile Backer.
2. Core: As indicated on Drawings.
3. Mold Resistance: ASTM D3273, score of 10 as rated according to ASTM D3274.

B. Cementitious Backer Units: ANSI A118.9 and ASTM C1288 or ASTM C1325, with manufacturer's standard edges.
   1. Product: One of the following:
      a. Custom Building Products; Wonderboard.
      b. James Hardie Building Products, Inc.; Hardiebacker.
      c. National Gypsum Company, Permabase Cement Board.
      d. USG Corporation; DUROCK Cement Board.
   2. Thickness: As indicated.
   3. Mold Resistance: ASTM D3273, score of 10 as rated according to ASTM D3274.

2.5 TRIM ACCESSORIES

A. Interior Trim: ASTM C1047.
   1. Material: Galvanized or aluminum-coated steel sheet, rolled zinc, plastic, or paper-faced galvanized steel sheet.

B. Exterior Trim: ASTM C1047.
   1. Material: Hot-dip galvanized-steel sheet, plastic, or rolled zinc>.
   2. Shapes:
      a. Cornerbead.
      b. LC-Bead: J-shaped; exposed long flange receives joint compound.
      c. Expansion (Control) Joint: One-piece, rolled zinc with V-shaped slot and removable strip covering slot opening.

2.6 JOINT TREATMENT MATERIALS

A. General: Comply with ASTM C475/C475M.

B. Joint Tape:
   1. Interior Gypsum Board: Paper.
   2. Exterior Gypsum Soffit Board: Paper.
   3. Tile Backing Panels: As recommended by panel manufacturer.

C. Joint Compound for Interior Gypsum Board: For each coat use formulation that is compatible with other compounds applied on previous or for successive coats.

   1. Prefilling: At open joints and damaged surface areas, use setting-type taping compound.
   2. Embedding and First Coat: For embedding tape and first coat on joints, fasteners, and trim flanges, use drying-type, all-purpose compound.
      a. Use setting-type compound for installing paper-faced metal trim accessories.

   3. Fill Coat: For second coat, use drying-type, all-purpose compound.
   4. Finish Coat: For third coat, use drying-type, all-purpose compound.

D. Joint Compound for Exterior Applications:
   1. Exterior Gypsum Soffit Board: Use setting-type taping compound and setting-type, sandable topping compound.

E. Joint Compound for Tile Backing Panels:
   1. Glass-Mat, Water-Resistant Backing Panel: As recommended by backing panel manufacturer.
   2. Cementitious Backer Units: As recommended by backer unit manufacturer.
   3. Water-Resistant Gypsum Backing Board: Use setting-type taping compound and setting-type, sandable topping compound.

2.7 TEXTURE FINISHES

A. Exterior Gypsum Board: As indicated on Drawings or selected by Architect from gypsum board manufacturer's full range.

2.8 AUXILIARY MATERIALS

A. Steel Drill Screws: ASTM C1002.

B. Sound Attenuation Blankets: ASTM C665, Type I (blankets without membrane facing).

C. Acoustical Joint Sealant: Specified in Section 079200 "Joint Sealants."

D. Thermal Insulation: As specified in Section 072100 "Thermal Insulation."

PART 3 - EXECUTION

3.1 APPLYING AND FINISHING PANELS

A. Comply with ASTM C840.

B. Examine panels before installation. Reject panels that are wet, moisture damaged, and mold damaged.

C. Install trim with back flanges intended for fasteners, attach to framing with same fasteners used for panels. Otherwise, attach trim according to manufacturer's written instructions.
   1. Control Joints: Install control joints at locations indicated on Drawings.

D. Prefill open joints and damaged surface areas.

E. Apply joint tape over gypsum board joints, except for trim products specifically indicated as not intended to receive tape.

F. Gypsum Board Finish Levels: Finish panels to levels indicated below and according to ASTM C840:
   1. Level 1: Concealed areas and where indicated.
   2. Level 2: Panels that are substrate for tile.
   3. Level 4: At panel surfaces that will be exposed to view unless otherwise indicated.

G. Remove and replace panels that are wet, moisture damaged, and mold damaged.

3.2 INSTALLATION OF EXTERIOR GYPSUM PANELS FOR CEILINGS AND SOFFITS

A. Apply panels perpendicular to supports, with end joints staggered and located over supports.
   1. Install with 1/4-inch open space where panels abut other construction or structural penetrations.
   2. Fasten with corrosion-resistant screws.

3.3 INSTALLATION OF TILE BACKING PANELS

A. Glass-Mat, Water-Resistant Backing Panels: Comply with manufacturer's written installation instructions and install at showers, tubs, and where indicated on Drawings. Install with 1/4-inch gap where panels abut other construction or penetrations.

B. Cementitious Backer Units: ANSI A108.11. Provide where indicated on Drawings.

C. Water-Resistant Backing Board: Install where indicated with 1/4-inch gap where panels abut other construction or penetrations.

D. Where tile backing panels abut other types of panels in same plane, shim surfaces to produce a uniform plane across panel surfaces.

3.4 INSTALLATION OF TRIM ACCESSORIES

A. General: For trim with back flanges intended for fasteners, attach to framing with same fasteners used for panels. Otherwise, attach trim according to manufacturer's written instructions.

B. Control Joints: Install control joints at locations indicated on Drawings.

C. Interior Trim: Install in the following locations:

   1. Cornerbead: Use at outside corners.
   2. LC-Bead: Use at exposed panel edges.
   3. L-Bead: Use where indicated on Drawings.

D. Exterior Trim: Install in the following locations:
   1. Cornerbead: Use at outside corners.
   2. LC-Bead: Use at exposed panel edges.

END OF SECTION 092900

SECTION 093000 - TILING

PART 1 - GENERAL

1.1 SUMMARY

A. Section Includes:
   1. Ceramic tile.
   2. Stone thresholds.

1.2 ACTION SUBMITTALS

A. Product Data: For each type of product indicated.

B. Samples:
   1. Each type and composition of tile and for each color and finish required.
   2. Assembled samples, with grouted joints, for each type and composition of tile and for each color and finish required.
   3. Stone thresholds in 6-inch lengths.

1.3 INFORMATIONAL SUBMITTALS

A. Qualification Data: For Installer.

1.4 MAINTENANCE MATERIAL SUBMITTALS

A. Furnish extra materials that match and are from same production runs as products installed and that are packaged with protective covering and identified with labels describing contents.
   1. Tile and Trim Units: Furnish quantity of full-size units equal to 5 percent of amount installed for each type, composition, color, pattern, and size indicated.

1.5 QUALITY ASSURANCE

A. Installer Qualifications: An entity with a minimum of 5 years documented experience installing tile similar to the scope and complexity of this Project.

1.6 DELIVERY, STORAGE, AND HANDLING

A. Deliver and store packaged materials in original containers with seals unbroken and labels intact until time of use. Comply with requirements in ANSI A137.1 for labeling tile packages.

B. Store tile and cementitious materials on elevated platforms, under cover, and in a dry location.

C. Store aggregates where grading and other required characteristics can be maintained and contamination can be avoided.

D. Store liquid materials in unopened containers and protected from freezing.

1.7 FIELD CONDITIONS

A. Environmental Limitations: Do not install tile until construction in spaces is complete and ambient temperature and humidity conditions are maintained at the levels indicated in referenced standards and manufacturer's written instructions.

PART 2 - PRODUCTS

2.1 TILE PRODUCTS

A. ANSI Ceramic Tile Standard: Provide Standard grade tile that complies with ANSI A137.1 for types, compositions, and other characteristics indicated.

B. Tile Types, Sizes, Colors and Patterns: As scheduled on Drawings.

C. Trim Units: Coordinated with sizes and coursing of adjoining flat tile where applicable and matching characteristics of adjoining flat file. Provide shapes as indicated or as selected by Architect from manufacturer’s standard shapes.

2.2 THRESHOLDS

A. General: Fabricate to sizes and profiles indicated or required to provide transition between adjacent floor finishes.

B. Marble Thresholds: ASTM C503, with a minimum abrasion resistance of 10 per ASTM C1353 or ASTM C241 and with honed finish.

2.3 SETTING MATERIALS

A. Latex-Portland Cement Mortar (Thin Set): ANSI A118.4.
   1. Manufacturer: One of the following:
      a. Custom Building Products.
      b. Laticrete International, Inc.
      c. MAPEI Corporation.

2.4 GROUT MATERIALS

A. Polymer-Modified Tile Grout: ANSI A118.7.
   1. Manufacturer: One of the following:
      a. Custom Building Products.
      b. Laticrete International, Inc.
      c. MAPEI Corporation.

2.5 MISCELLANEOUS MATERIALS

A. Trowelable Underlayments and Patching Compounds: Latex-modified, portland cement-based formulation provided or approved by manufacturer of tile-setting materials for installations indicated.

B. Metal Edge Strips: As indicated on Drawings.

C. Grout Sealer: Manufacturer's standard product for sealing grout joints and that does not change color or appearance of grout.

PART 3 - EXECUTION

3.1 EXAMINATION

A. Examine substrates, areas, and conditions where tile will be installed, with Installer present, for compliance with requirements for installation tolerances and other conditions affecting performance of the Work.
   1. Verify that substrates for setting tile are firm; dry; clean; free of coatings that are incompatible with tile-setting materials, including curing compounds and other substances that contain soap, wax, oil, or silicone; and comply with flatness tolerances required by ANSI A108.01 for installations indicated.
   2. Verify that concrete substrates for tile floors installed with thinset mortar comply with surface finish requirements in ANSI A108.01 for installations indicated.
   3. Verify that installation of grounds, anchors, recessed frames, electrical and mechanical units of work, and similar items located in or behind tile has been completed.
   4. Verify that joints and cracks in tile substrates are coordinated with tile joint locations; if not coordinated, adjust joint locations in consultation with Architect.

B. Proceed with installation only after unsatisfactory conditions have been corrected.

3.2 PREPARATION

A. Fill cracks, holes, and depressions in concrete substrates for tile floors installed with adhesives with trowelable leveling and patching compound specifically recommended by tile-setting material manufacturer.

B. Blending: For tile exhibiting color variations, use factory blended tile or blend tiles at Project site before installing.

3.3 INSTALLATION

A. Comply with TCNA's "Handbook for Ceramic, Glass, and Stone Tile Installation" for TCNA installation methods specified in tile installation schedules. Comply with parts of the ANSI A108 Series "Specifications for Installation of Ceramic Tile" that are referenced in TCNA installation methods, specified in tile installation schedules, and apply to types of setting and grouting materials used.

B. Accurately form intersections and returns. Perform cutting and drilling of tile without marring visible surfaces. Carefully grind cut edges of tile abutting trim, finish, or built-in items for straight aligned joints. Fit tile closely to electrical outlets, piping, fixtures, and other penetrations so plates, collars, or covers overlap tile.

C. Provide manufacturer's standard trim shapes where necessary to eliminate exposed tile edges.

D. Jointing Pattern: Lay tile in grid pattern unless otherwise indicated. Lay out tile work and center tile fields in both directions in each space or on each wall area. Lay out tile work to minimize the use of pieces that are less than half of a tile. Provide uniform joint widths unless otherwise indicated.

E. Joint Widths: As indicated on Drawings.

F. Stone Thresholds: Install stone thresholds in same type of setting bed as adjacent floor unless otherwise indicated.

G. Metal Edge Strips: Install at locations indicated.

H. Grout Sealer: Apply grout sealer to grout joints in tile floors according to grout-sealer manufacturer's written instructions. As soon as grout sealer has penetrated grout joints, remove excess sealer and sealer from tile faces by wiping with soft cloth.

3.4 INTERIOR TILE INSTALLATION SCHEDULE

A. Interior Floor Installations, Concrete Subfloor:
   1. Tile Installation F113: Thin-set mortar.
      a. Thin-Set Mortar: Latex-portland cement mortar.
      b. Grout: Polymer-modified grout.

B. Interior Wall Installations, Wood Studs or Furring:
   1. Tile Installation W243: Thin-set mortar on gypsum board.
      a. Thin-Set Mortar: Latex-portland cement mortar.
      b. Grout: Polymer-modified grout.

2. Tile Installation W244: Thin-set mortar on cementitious backer units.
   a. Thin-Set Mortar: Latex-portland cement mortar.
   b. Grout: Polymer-modified grout.

C. Bathtub Wall Installations, Wood Studs or Furring:
   1. Tile Installation B413: Thin-set mortar on water-resistant gypsum board.
      a. Thin-Set Mortar: Latex-portland cement mortar.
      b. Grout: Polymer-modified grout.

END OF SECTION 093000

SECTION 095113 - ACOUSTICAL PANEL CEILINGS

PART 1 - GENERAL

1.1 SUMMARY

A. Section includes acoustical panels and exposed suspension systems for ceilings.

1.2 PREINSTALLATION MEETINGS

A. Preinstallation Conference: Conduct conference at Project site.

1.3 ACTION SUBMITTALS

A. Product Data: For each type of product.

B. Samples: For each exposed product and for each color and texture specified.

1.4 INFORMATIONAL SUBMITTALS

A. Product test reports.

B. Evaluation reports.

1.5 CLOSEOUT SUBMITTALS

A. Maintenance data.

1.6 DELIVERY, STORAGE, AND HANDLING

A. Deliver acoustical panels, suspension-system components, and accessories to Project site in original, unopened packages and store them in a fully enclosed, conditioned space where they will be protected against damage from moisture, humidity, temperature extremes, direct sunlight, surface contamination, and other causes.

B. Before installing acoustical panels, permit them to reach room temperature and a stabilized moisture content.

C. Handle acoustical panels carefully to avoid chipping edges or damaging units in any way.

1.7 FIELD CONDITIONS

A. Environmental Limitations: Do not install acoustical panel ceilings until spaces are enclosed and weatherproof, wet work in spaces is complete and dry, work above ceilings is complete, and ambient temperature and humidity conditions are maintained at the levels indicated for Project when occupied for its intended use.

PART 2 - PRODUCTS

2.1 PERFORMANCE REQUIREMENTS

A. Surface-Burning Characteristics: Comply with ASTM E 84; testing by a qualified testing agency. Identify products with appropriate markings of applicable testing agency.
   1. Flame-Spread Index: Comply with ASTM E 1264 for Class A materials.
   2. Smoke-Developed Index: 50 or less.

2.2 ACOUSTICAL PANEL CEILINGS, GENERAL

A. Acoustical Panel Standard: Comply with ASTM E 1264.

B. Metal Suspension System Standard: Comply with ASTM C 635.

C. Attachment Devices: Size for five times the design load indicated in ASTM C 635, Table 1, "Direct Hung," unless otherwise indicated. Comply with seismic design requirements.

2.3 ACOUSTICAL PANELS

A. Basis-of-Design Product: As scheduled on Drawings.

B. Modular Size: 24 by 24 inches.

2.4 METAL SUSPENSION SYSTEMS, GENERAL

A. Metal Suspension-System Standard: Provide manufacturer's standard direct-hung metal suspension systems of types, structural classifications, and finishes indicated that comply with applicable requirements in ASTM C 635/C 635M.

B. Attachment Devices: Size for five times the design load indicated in ASTM C 635/C 635M, Table 1, "Direct Hung," unless otherwise indicated.

C. Wire Hangers, Braces, and Ties: Provide wires complying with the following requirements:
   1. Zinc-Coated, Carbon-Steel Wire: ASTM A 641/A 641M, Class 1 zinc coating, soft temper.

2. Size: Select wire diameter so its stress at three times hanger design load (ASTM C 635/C 635M, Table 1, "Direct Hung") will be less than yield stress of wire, but provide not less than 0.106-inch diameter wire.

2.5 METAL SUSPENSION SYSTEM

A. Basis-of-Design Manufacturer: Acoustical panel manufacturer.

B. Narrow-Face, Capped, Double-Web, Steel Suspension System: Main and cross runners roll formed from cold-rolled steel sheet; prepainted, electrolytically zinc coated, or hot-dip galvanized according to ASTM A 653/A 653M, not less than G30 coating designation; with prefinished 9/16-inch) wide metal caps on flanges.
   1. Structural Classification: Intermediate-duty system.
   2. End Condition of Cross Runners: Manufacturer’s standard type.
   3. Face Design: Flat, flush.
   4. Cap Material: Steel cold-rolled sheet.
   5. Cap Finish: Painted white.

C. Roll-Formed, Sheet-Metal Edge Moldings and Trim: Type and profile indicated or, if not indicated, manufacturer's standard moldings for edges and penetrations; formed from sheet metal of same material, finish, and color as that used for exposed flanges of suspension-system runners.

PART 3 - EXECUTION

3.1 INSTALLATION

A. Install acoustical panel ceilings to comply with ASTM C 636/C 636M and seismic design requirements indicated, according to manufacturer's written instructions and CISCA's "Ceiling Systems Handbook."

B. Measure each ceiling area and establish layout of acoustical panels to balance border widths at opposite edges of each ceiling. Avoid using less-than-half-width panels at borders, and comply with layout shown on reflected ceiling plans.

END OF SECTION 095113

SECTION 096513 - RESILIENT BASE AND ACCESSORIES

PART 1 - GENERAL

1.1 SUMMARY

A. Section Includes:
   1. Resilient base.
   2. Resilient molding accessories.

1.2 ACTION SUBMITTALS

A. Product Data: For each type of product.

B. Samples for Verification: For each type of product indicated and for each color, texture, and pattern required in manufacturer's standard-size Samples, but not less than 12 inches long.

C. Product Schedule: For resilient base and accessory products. Use same designations indicated on Drawings.

1.3 MAINTENANCE MATERIAL SUBMITTALS

A. Furnish extra materials that match products installed and that are packaged with protective covering for storage and identified with labels describing contents.
   1. Furnish not less than 25 linear feet for every 500 linear feet or fraction thereof, of each type, color, pattern, and size of resilient product installed.

1.4 DELIVERY, STORAGE, AND HANDLING

A. Store resilient products and installation materials in dry spaces protected from the weather, with ambient temperatures maintained within range recommended by manufacturer, but not less than 50 deg F or more than 90 deg F.

1.5 FIELD CONDITIONS

A. Maintain ambient temperatures within range recommended by manufacturer, but not less than 70 deg F or more than 95 deg F, in spaces to receive resilient products during the following time periods:
   1. 48 hours before installation.
   2. During installation.
   3. 48 hours after installation.

B. After installation and until Substantial Completion, maintain ambient temperatures within range recommended by manufacturer, but not less than 55 deg F or more than 95 deg F.

C. Install resilient products after other finishing operations, including painting, have been completed.

PART 2 - PRODUCTS

2.1 THERMOPLASTIC-RUBBER BASE

A. :Basis of Design: As scheduled on Drawings.

B. Product Standard: ASTM F 1861, Type TP (rubber, thermoplastic).
   1. Group: I (solid, homogeneous).
   2. Style and Location:
      a. Style B, Cove: Provide in areas with resilient flooring.

C. Thickness: [0.125 inch.

D. Height: 6 inches.

E. Lengths: Coils in manufacturer's standard length.

F. Outside Corners: Job formed.

G. Inside Corners: Job formed.

H. Colors: As scheduled on Drawings.

2.2 VINYL MOLDING ACCESSORY

A. Manufacturer: Resilient base manufacturer.

B. Description: Vinyl units for applications indicated.

C. Profile and Dimensions: As indicated.

D. Colors and Patterns: As scheduled or as selected by Architect from full range of industry colors.

2.3 INSTALLATION MATERIALS

A. Trowelable Leveling and Patching Compounds: Latex-modified, portland cement based or blended hydraulic-cement-based formulation provided or approved by resilient-product manufacturer for applications indicated.

B. Adhesives: Water-resistant type recommended by resilient-product manufacturer for resilient products and substrate conditions indicated.

PART 3 - EXECUTION

3.1 EXAMINATION

A. Examine substrates, with Installer present, for compliance with requirements for maximum moisture content and other conditions affecting performance of the Work.
   1. Verify that finishes of substrates comply with tolerances and other requirements specified in other Sections and that substrates are free of cracks, ridges, depressions, scale, and foreign deposits that might interfere with adhesion of resilient products.

B. Proceed with installation only after unsatisfactory conditions have been corrected.
   1. Installation of resilient products indicates acceptance of surfaces and conditions.

3.2 PREPARATION

A. Prepare substrates according to manufacturer's written instructions to ensure adhesion of resilient products.

B. Fill cracks, holes, and depressions in substrates with trowelable leveling and patching compound; remove bumps and ridges to produce a uniform and smooth substrate.

C. Do not install resilient products until they are the same temperature as the space where they are to be installed.
   1. At least 48 hours in advance of installation, move resilient products and installation materials into spaces where they will be installed.

D. Immediately before installation, sweep and vacuum clean substrates to be covered by resilient products.

3.3 RESILIENT BASE INSTALLATION

A. Comply with manufacturer's written instructions for installing resilient base.

B. Apply resilient base to walls, columns, pilasters, casework and cabinets in toe spaces, and other permanent fixtures in rooms and areas where base is required.

C. Install resilient base in lengths as long as practical without gaps at seams and with tops of adjacent pieces aligned.

D. Tightly adhere resilient base to substrate throughout length of each piece, with base in continuous contact with horizontal and vertical substrates.

E. Do not stretch resilient base during installation.

F. On masonry surfaces or other similar irregular substrates, fill voids along top edge of resilient base with manufacturer's recommended adhesive filler material.

G. Job-Formed Corners:
   1. Outside Corners: Use straight pieces of maximum lengths possible and form with returns not less than 3 inches in length.
      a. Form without producing discoloration (whitening) at bends.
   2. Inside Corners: Use straight pieces of maximum lengths possible and form with returns not less than 3 inches in length.
      a. Miter or cope corners to minimize open joints.

3.4 RESILIENT ACCESSORY INSTALLATION

A. Comply with manufacturer's written instructions for installing resilient accessories.

B. Resilient Molding Accessories: Butt to adjacent materials and tightly adhere to substrates throughout length of each piece. Install reducer strips at edges of floor covering that would otherwise be exposed.

3.5 CLEANING AND PROTECTION

A. Comply with manufacturer's written instructions for cleaning and protecting resilient products.

B. Perform the following operations immediately after completing resilient-product installation:
   1. Remove adhesive and other blemishes from exposed surfaces.

C. Protect resilient products from mars, marks, indentations, and other damage from construction operations and placement of equipment and fixtures during remainder of construction period.

D. Cover resilient products subject to wear and foot traffic until Substantial Completion.

END OF SECTION 096513

SECTION 096519 - RESILIENT TILE FLOORING

PART 1 - GENERAL

1.1 SUMMARY

A. Section Includes:
   1. Solid vinyl floor tile.

1.2 ACTION SUBMITTALS

A. Product Data: For each type of product indicated.

B. Shop Drawings: For each type of floor tile. Include floor tile layouts, edges, doorways, enclosing partitions, cabinets, and cutouts.

C. Samples: Full-size units of each color and pattern of floor tile required.

1.3 CLOSEOUT SUBMITTALS

A. Maintenance Data: For each type of floor tile to include in maintenance manuals.

1.4 MAINTENANCE MATERIAL SUBMITTALS

A. Furnish extra materials that match products installed and that are packaged with protective covering for storage and identified with labels describing contents.
   1. Floor Tile: Furnish two boxes for every 50 boxes or fraction thereof, of each type, color, and pattern of floor tile installed.

1.5 QUALITY ASSURANCE

A. Fire-Test-Response Characteristics: As determined by testing identical products according to ASTM E648 or NFPA 253 by a qualified testing agency.
   1. Critical Radiant Flux Classification: Class I, not less than 0.45 W/sq. cm.

1.6 DELIVERY, STORAGE, AND HANDLING

A. Store floor tile and installation materials in dry spaces protected from the weather, with ambient temperatures maintained within range recommended by manufacturer, but not less than 50 deg F or more than 90 deg F. Store floor tiles on flat surfaces.

1.7 FIELD CONDITIONS

A. Maintain ambient temperatures within range recommended by manufacturer, but not less than 70 deg F or more than 95 deg F, in spaces to receive floor tile during the following time periods:
   1. 48 hours before installation.
   2. During installation.
   3. 48 hours after installation.

B. After installation and until Substantial Completion, maintain ambient temperatures within range recommended by manufacturer, but not less than 55 deg F or more than 95 deg F.

C. Close spaces to traffic during floor tile installation.

D. Close spaces to traffic for 48 hours after floor tile installation.

E. Install floor tile after other finishing operations, including painting, have been completed.

PART 2 - PRODUCTS

2.1 SOLID VINYL FLOOR TILE

A. Products: As scheduled on Drawings.

B. Tile Standard: ASTM F1700.

C. Thickness: 0.100 inch (2.5 mm) with 20 mil wear layer.

D. Size: 7 by 48 inch planks.

E. Colors and Patterns: As scheduled on Drawings.

2.2 INSTALLATION MATERIALS

A. Trowelable Leveling and Patching Compounds: Latex-modified, portland cement based or blended hydraulic-cement-based formulation provided or approved by manufacturer for applications indicated.

B. Adhesives: Water-resistant type recommended by manufacturer to suit floor tile and substrate conditions indicated.

PART 3 - EXECUTION

3.1 PREPARATION

A. Prepare substrates according to manufacturer's written instructions to ensure adhesion of resilient products.

B. Concrete Substrates: Prepare according to ASTM F710.
   1. Verify that substrates are dry and free of curing compounds, sealers, and hardeners.
   2. Remove substrate coatings and other substances that are incompatible with adhesives and that contain soap, wax, oil, or silicone, using mechanical methods recommended by manufacturer. Do not use solvents.
   3. Alkalinity and Adhesion Testing: Perform tests recommended by manufacturer. Proceed with installation only after substrates pass testing.
   4. Moisture Testing: Perform tests recommended by floor covering manufacturer. Proceed with installation only after substrates pass testing.

C. Fill cracks, holes, and depressions in substrates with trowelable leveling and patching compound and remove bumps and ridges to produce a uniform and smooth substrate.

3.2 FLOOR TILE INSTALLATION

A. Comply with manufacturer's written instructions for installing floor tile.

B. Lay out floor tiles from center marks established with principal walls, discounting minor offsets, so tiles at opposite edges of room are of equal width. Adjust as necessary to avoid using cut widths that equal less than one-half tile at perimeter.
   1. Lay tiles in pattern indicated.

C. Adhere floor tiles to flooring substrates using a full spread of adhesive applied to substrate to produce a completed installation without open cracks, voids, raising and puckering at joints, telegraphing of adhesive spreader marks, and other surface imperfections.

3.3 CLEANING AND PROTECTION

A. Comply with manufacturer's written instructions for cleaning and protecting floor tile.

END OF SECTION 096519

SECTION 096566 - RESILIENT ATHLETIC FLOORING

PART 1 - GENERAL

1.1 SUMMARY

A. Section Includes:
   1. Rubber floor tile.

B. Related Sections:
   1. Section 096513 "Resilient Base and Accessories" for wall base and accessories installed with flooring.

1.2 ACTION SUBMITTALS

A. Product Data: For each type of product indicated.

B. Shop Drawings: Show installation details and locations of the following:

   1. Border tiles.
   2. Floor patterns.

C. Samples for Verification: For each type, color, and pattern of flooring indicated, 6-inch square Samples of same thickness and material indicated for the Work.

1.3 CLOSEOUT SUBMITTALS

A. Maintenance Data: For flooring to include in maintenance manuals.

1.4 MAINTENANCE MATERIAL SUBMITTALS

A. Furnish extra materials, before installation begins, that match products installed and that are packaged with protective covering for storage and identified with labels describing contents.
   1. Floor Tile: Furnish no fewer than 2 boxes for each 50 boxes or fraction thereof, of each type, color, pattern, and size of floor tile installed.

1.5 DELIVERY, STORAGE, AND HANDLING

A. Deliver materials in original packages and containers, with seals unbroken, bearing manufacturer's labels indicating brand name and directions for storing.

B. Store materials to prevent deterioration. Store tiles on flat surfaces.

1.6 FIELD CONDITIONS

A. Adhesively Applied Products:
   1. Maintain temperatures during installation within range recommended in writing by manufacturer, but not less than 70 deg F or more than 95 deg F, in spaces to receive flooring 48 hours before installation, during installation, and 48 hours after installation unless longer period is recommended in writing by manufacturer.
   2. After postinstallation period, maintain temperatures within range recommended in writing by manufacturer, but not less than 55 deg F or more than 95 deg F.
   3. Close spaces to traffic during flooring installation.
   4. Close spaces to traffic for 48 hours after flooring installation unless manufacturer recommends longer period in writing.

B. Install flooring after other finishing operations, including painting, have been completed.

PART 2 - PRODUCTS

2.1 RUBBER FLOOR TILE

A. Basis-of-Design Product: As scheduled on Drawings.

B. Description: Athletic flooring consisting of modular rubber tiles with smooth edges for adhered application.

C. Material: Recycled-rubber compound.

D. Traffic-Surface Texture: Smooth.

E. Size: Manufacturer's standard-size square tile.

F. Thickness: 0.079 Inch (2 mm).

G. Color and Pattern: As scheduled on Drawings.

2.2 ACCESSORIES

A. Trowelable Leveling and Patching Compound: Latex-modified, hydraulic-cement-based formulation approved by flooring manufacturer.

B. Adhesives: Water-resistant type recommended in writing by manufacturer for substrate and conditions indicated.

PART 3 - EXECUTION

3.1 EXAMINATION

A. Examine substrates, with Installer present, for compliance with requirements for installation tolerances, moisture content, and other conditions affecting performance of the Work.
   1. Verify that finishes of substrates comply with tolerances and other requirements specified in other Sections and that substrates are free of cracks, ridges, depressions, scale, and foreign deposits that might interfere with adhesion of resilient products.

B. Proceed with installation only after unsatisfactory conditions have been corrected.

3.2 PREPARATION

A. Prepare substrates according to manufacturer's written recommendations to ensure adhesion of flooring.

B. Concrete Substrates: Prepare according to ASTM F 710.
   1. Verify that substrates are dry and free of curing compounds, sealers, and hardeners.
   2. Alkalinity Testing: Perform pH testing according to ASTM F 710. Proceed with installation only if pH readings are not less than 7.0 and not greater than 8.5.
   3. Moisture Testing:
      a. Perform anhydrous calcium chloride test, ASTM F 1869. Proceed with installation only after substrates have maximum moisture-vapor-emission rate of 3 lb of water/1000 sq. ft. in 24 hours. Perform minimum of two tests in separate areas.

C. Remove substrate coatings and other substances that are incompatible with adhesives and that contain soap, wax, oil, or silicone, using mechanical methods recommended in writing by manufacturer. Do not use solvents.

D. Use trowelable leveling and patching compound to fill cracks, holes, and depressions in substrates.

E. Move flooring and installation materials into spaces where they will be installed at least 48 hours in advance of installation unless manufacturer recommends a longer period in writing.
   1. Do not install flooring until they are same temperature as space where they are to be installed.

F. Sweep and vacuum clean substrates to be covered by flooring immediately before installation. After cleaning, examine substrates for moisture, alkaline salts, carbonation, and dust.

G. Proceed with installation only after unsatisfactory conditions have been corrected.

3.3 FLOORING INSTALLATION, GENERAL

A. Comply with manufacturer's written installation instructions.

B. Scribe, cut, and fit flooring to butt neatly and tightly to vertical surfaces, equipment anchors, floor outlets, and other interruptions of floor surface.

C. Extend flooring into toe spaces, door reveals, closets, and similar openings unless otherwise indicated.

D. Maintain reference markers, holes, and openings that are in place or marked for future cutting by repeating subfloor markings on flooring. Use nonpermanent, nonstaining marking device.

3.4 FLOOR TILE INSTALLATION

A. Lay out tiles from center marks established with principal walls, discounting minor offsets, so tiles at opposite edges of room are of equal width. Adjust as necessary to avoid using cut widths that equal less than one-half tile at perimeter.
   1. Lay tiles in pattern indicated.

B. Discard broken, cracked, chipped, or deformed tiles.

C. Match tiles for color and pattern by selecting tiles from cartons in same sequence as manufactured and packaged if so numbered.

D. Adhered Flooring: Adhere products to substrates using a full spread of adhesive applied to substrate to comply with adhesive and flooring manufacturers' written instructions, including those for trowel notching, adhesive mixing, and adhesive open and working times.
   1. Provide completed installation without open cracks, voids, raising and puckering at joints, telegraphing of adhesive spreader marks, and other surface imperfections.

3.5 CLEANING AND PROTECTING

A. Perform the following operations immediately after completing flooring installation:
   1. Remove adhesive and other blemishes from flooring surfaces.
   2. Sweep and vacuum flooring thoroughly.
   3. Damp-mop flooring to remove marks and soil after time period recommended in writing by manufacturer.

B. Protect flooring from mars, marks, indentations, and other damage from construction operations and placement of equipment and fixtures during remainder of construction period. Use protection methods recommended in writing by manufacturer.

1. Do not move heavy and sharp objects directly over flooring. Protect flooring with plywood or hardboard panels to prevent damage from storing or moving objects over flooring.

END OF SECTION 096566

SECTION 097200 - WALL COVERINGS

PART 1 - GENERAL

1.1 SUMMARY

A. Section Includes:
   1. Vinyl wall covering.

B. Related Requirements:
   1. Section 099113 "Interior Painting" for priming wall surfaces.

1.2 ACTION SUBMITTALS

A. Product Data: For each type of product indicated. Include data on physical characteristics, durability, fade resistance, and flame-resistance characteristics.

B. Samples for Verification: Full width by 36-inch long section of wall covering.
   1. Sample from same print run or dye lot to be used for the Work, with specified treatments applied. Mark top and face of fabric.

C. Product Schedule: For wall coverings. Use same designations indicated on Drawings.

1.3 INFORMATIONAL SUBMITTALS

A. Product Test Reports: Based on evaluation of comprehensive tests performed by a qualified testing agency, for wall covering.

1.4 CLOSEOUT SUBMITTALS

A. Maintenance Data: For wall coverings to include in maintenance manuals.

1.5 MAINTENANCE MATERIAL SUBMITTALS

A. Furnish extra materials that match products installed and that are packaged with protective covering for storage and identified with labels describing contents.
   1. Wall-Covering Materials: For each type, full-size units equal to 5 percent of amount installed.

1.6 QUALITY ASSURANCE

A. Fire-Test-Response Characteristics: As determined by testing identical wall coverings applied with identical adhesives to substrates according to test method indicated below by a qualified testing agency. Identify products with appropriate markings of applicable testing agency.
   1. Surface-Burning Characteristics: As follows, per ASTM E 84:
      a. Flame-Spread Index: 25 or less.
      b. Smoke-Developed Index: 50 or less.

1.7 PROJECT CONDITIONS

A. Environmental Limitations: Do not deliver or install wall coverings until spaces are enclosed and weathertight, wet work in spaces is complete and dry, work above ceilings is complete, and temporary HVAC system is operating and maintaining ambient temperature and humidity conditions at occupancy levels during the remainder of the construction period.

B. Lighting: Do not install wall covering until a permanent level of lighting is provided on the surfaces to receive wall covering.

C. Ventilation: Provide continuous ventilation during installation and for not less than the time recommended by wall-covering manufacturer for full drying or curing.

PART 2 - PRODUCTS

2.1 WALL COVERINGS

A. General: Provide rolls of each type of wall covering from same print run or dye lot.

2.2 VINYL WALL COVERING

A. Vinyl Wall-Covering Standards: Provide products complying with the following:
   1. CFFA-W-101-D for Type II, Medium-Duty products.
   2. ASTM F 793 for wall coverings that qualify as Category II, Decorative with Medium Serviceability products.
   3. Basis of Design Product: As scheduled on Drawings.

B. Weight: 20 oz.

C. Width: 52 inches.

D. Backing: Nonwoven fabric.

E. Colors, Textures, and Patterns: As scheduled on Drawings.

2.3 ACCESSORIES

A. Adhesive: Mildew-resistant, nonstaining adhesive, for use with specific wall covering and substrate application; as recommended in writing by wall-covering manufacturer.

PART 3 - EXECUTION

3.1 EXAMINATION

A. Examine substrates and conditions, with Installer present, for compliance with requirements for levelness, wall plumbness, maximum moisture content, and other conditions affecting performance of the Work.

B. Proceed with installation only after unsatisfactory conditions have been corrected.

3.2 PREPARATION

A. Comply with manufacturer's written instructions for surface preparation.

B. Clean substrates of substances that could impair bond of wall covering, including dirt, oil, grease, mold, mildew, and incompatible primers.

C. Prepare substrates to achieve a smooth, dry, clean, structurally sound surface free of flaking, unsound coatings, cracks, and defects.
   1. Gypsum Board: Prime with primer as recommended in writing by primer/sealer manufacturer and wall-covering manufacturer.
   2. Painted Surfaces: Treat areas susceptible to pigment bleeding.

D. Check painted surfaces for pigment bleeding. Sand gloss, semigloss, and eggshell finish with fine sandpaper.

E. Remove hardware and hardware accessories, electrical plates and covers, light fixture trims, and similar items.

F. Acclimatize wall-covering materials by removing them from packaging in the installation areas not less than 24 hours before installation.

3.3 INSTALLATION

A. General: Comply with wall-covering manufacturers' written installation instructions applicable to products and applications indicated except where more stringent requirements apply.

B. Cut wall-covering strips in roll number sequence. Change roll numbers at partition breaks and corners.

C. Install strips in same order as cut from roll.

D. Install reversing every other strip.

E. Install wall covering with no gaps or overlaps, no lifted or curling edges, and no visible shrinkage.

F. Match pattern 72 inches above the finish floor.

G. Install seams vertical and plumb at least 6 inches from outside corners and 3 inches from inside corners unless a change of pattern or color exists at corner. No horizontal seams are permitted.

H. Fully bond wall covering to substrate. Remove air bubbles, wrinkles, blisters, and other defects.

I. Trim edges and seams for color uniformity, pattern match, and tight closure. Butt seams without any overlay or spacing between strips.

3.4 CLEANING

A. Remove excess adhesive at finished seams, perimeter edges, and adjacent surfaces.

B. Use cleaning methods recommended in writing by wall-covering manufacturer.

C. Replace strips that cannot be cleaned.

D. Reinstall hardware and hardware accessories, electrical plates and covers, light fixture trims, and similar items.

END OF SECTION 097200

SECTION 099113 - EXTERIOR PAINTING

PART 1 - GENERAL

1.1 SUMMARY

A. Section includes surface preparation and the application of paint systems on exterior substrates

1.2 ACTION SUBMITTALS

A. Product Data: For each type of product. Include preparation requirements and application instructions.

B. Samples: For each type of paint system and each color and gloss of topcoat.

C. Product List: For each product indicated. Include printout of current "MPI Approved Products List" for each product category specified, with the proposed product highlighted.

1.3 MAINTENANCE MATERIAL SUBMITTALS

A. Furnish extra materials that match products installed and that are packaged with protective covering for storage and identified with labels describing contents.
   1. Paint: 5 percent, but not less than 1 gal. of each material and color applied.

1.4 QUALITY ASSURANCE

A. Mockups: Apply mockups of each paint system indicated and each color and finish selected to verify preliminary selections made under Sample submittals and to demonstrate aesthetic effects and set quality standards for materials and execution.
   1. Architect will select one surface to represent surfaces and conditions for application of each paint system specified in Part 3.
      a. Vertical and Horizontal Surfaces: Provide samples of at least 100 sq. ft.
      b. Other Items: Architect will designate items or areas required.
   2. Final approval of color selections will be based on mockups.
      a. If preliminary color selections are not approved, apply additional mockups of additional colors selected by Architect at no added cost to Owner.

1.5 DELIVERY, STORAGE, AND HANDLING

A. Store materials not in use in tightly covered containers in well-ventilated areas with ambient temperatures continuously maintained at not less than 45 deg F.

1. Maintain containers in clean condition, free of foreign materials and residue.
2. Remove rags and waste from storage areas daily.

1.6 FIELD CONDITIONS

A. Apply paints only when temperature of surfaces to be painted and ambient air temperatures are between 50 and 95 deg F.

B. Do not apply paints in snow, rain, fog, or mist; when relative humidity exceeds 85 percent; at temperatures less than 5 deg F above the dew point; or to damp or wet surfaces.

PART 2 - PRODUCTS

2.1 MANUFACTURERS

A. Basis of Design Manufacturer: Benjamin Moore. Other acceptable manufacturers:
1. Glidden Professional.
2. PPG Paints.
3. Sherwin-Williams.

2.2 PAINT, GENERAL

A. Colors: As scheduled.

PART 3 - EXECUTION

3.1 EXAMINATION

A. Examine substrates and conditions, with Applicator present, for compliance with requirements for maximum moisture content and other conditions affecting performance of the Work.

B. Maximum Moisture Content of Substrates: When measured with an electronic moisture meter as follows:
1. Wood: 15 percent.

C. Verify suitability of substrates, including surface conditions and compatibility with existing finishes and primers.

D. Proceed with coating application only after unsatisfactory conditions have been corrected.
1. Application of coating indicates acceptance of surfaces and conditions.

3.2 PREPARATION

A. Comply with manufacturer's written instructions applicable to substrates and paint systems indicated.

B. Remove hardware, covers, plates, and similar items already in place that are removable and are not to be painted. If removal is impractical or impossible because of size or weight of item, provide surface-applied protection before surface preparation and painting.
   1. After completing painting operations, use workers skilled in the trades involved to reinstall items that were removed. Remove surface-applied protection.

C. Clean substrates of substances that could impair bond of paints, including dust, dirt, oil, grease, and incompatible paints and encapsulants.
   1. Remove incompatible primers and reprime substrate with compatible primers or apply tie coat as required to produce paint systems indicated.

3.3 APPLICATION

A. Apply paints according to manufacturer's written instructions.

B. Apply paints to produce surface films without cloudiness, spotting, holidays, laps, brush marks, roller tracking, runs, sags, ropiness, or other surface imperfections. Cut in sharp lines and color breaks.

3.4 CLEANING AND PROTECTION

A. Protect work of other trades against damage from paint application. Correct damage to work of other trades by cleaning, repairing, replacing, and refinishing, as approved by Architect, and leave in an undamaged condition.

B. At completion of construction activities of other trades, touch up and restore damaged or defaced painted surfaces.

3.5 EXTERIOR PAINTING SCHEDULE

A. Exterior Wood:
   1. Primer: None required.
   2. 1st and 2nd Finish Coats: Moore Aura Waterborne Exterior Semi-Gloss.

B. Exterior Plastic Fabrications (e.g. Fypon):
   1. Latex Floor Paint System:
      a. Primer: Moore Fresh Start Multi-Purpose Latex Primer.
      b. 1st and 2nd Finish Coats: Moore Aura Waterborne Exterior Semi-Gloss.

C. Exterior Ferrous Metal and Nonferrous Metal:
   1. Primer: Moore IRONCLAD Latex Lustre Metal and Wood Enamel.
   2. 1st and 2nd Finish Coats: Moore Moorglo Soft gloss Fortified Acrylic House Paint.

D. Exterior CMU:
   1. Primer: None required.
   2. 1st and 2nd Finish Coats: Moore Ultra Spec Masonry Acrylic Latex Satin-Fil.

END OF SECTION 099113

SECTION 099123 - INTERIOR PAINTING

PART 1 - GENERAL

1.1 SUMMARY

A. Section includes surface preparation and the application of paint systems on interior substrates.

1.2 ACTION SUBMITTALS

A. Product Data: For each type of product. Include preparation requirements and application instructions.

B. Samples: For each type of paint system and in each color and gloss of topcoat.

C. Product List: For each product indicated.

1.3 MAINTENANCE MATERIAL SUBMITTALS

A. Furnish extra materials that match products installed and that are packaged with protective covering for storage and identified with labels describing contents.
   1. Paint: 5 percent, but not less than 1 gal. of each material and color applied.

1.4 QUALITY ASSURANCE

A. Mockups: Apply mockups of each paint system indicated and each color and finish selected to verify preliminary selections made under Sample submittals and to demonstrate aesthetic effects and set quality standards for materials and execution.
   1. Architect will select one surface to represent surfaces and conditions for application of each paint system specified in Part 3.
      a. Vertical and Horizontal Surfaces: Provide samples of at least 100 sq. ft.
      b. Other Items: Architect will designate items or areas required.
   2. Final approval of color selections will be based on mockups.
      a. If preliminary color selections are not approved, apply additional mockups of additional colors selected by Architect at no added cost to Owner.

1.5 DELIVERY, STORAGE, AND HANDLING

A. Store materials not in use in tightly covered containers in well-ventilated areas with ambient temperatures continuously maintained at not less than 45 deg F.
   1. Maintain containers in clean condition, free of foreign materials and residue.
   2. Remove rags and waste from storage areas daily.

1.6 FIELD CONDITIONS

A. Apply paints only when temperature of surfaces to be painted and ambient air temperatures are between 50 and 95 deg F.

B. Do not apply paints when relative humidity exceeds 85 percent; at temperatures less than 5 deg F above the dew point; or to damp or wet surfaces.

PART 2 - PRODUCTS

2.1 MANUFACTURERS

A. Basis of Design Manufacturer: Benjamin Moore. Other acceptable manufacturers:
   1. Glidden Professional.
   2. PPG Paints.
   3. Sherwin-Williams.

2.2 PAINT, GENERAL

A. Colors: As scheduled.

PART 3 - EXECUTION

3.1 EXAMINATION

A. Examine substrates and conditions, with Applicator present, for compliance with requirements for maximum moisture content and other conditions affecting performance of the Work.

B. Maximum Moisture Content of Substrates: When measured with an electronic moisture meter as follows:
   1. Wood: 15 percent.
   2. Gypsum Board: 12 percent.

C. Verify suitability of substrates, including surface conditions and compatibility with existing finishes and primers.

D. Proceed with coating application only after unsatisfactory conditions have been corrected.
   1. Application of coating indicates acceptance of surfaces and conditions.

3.2 PREPARATION

A. Comply with manufacturer's written instructions and recommendations in "MPI Manual" applicable to substrates indicated.

B. Remove hardware, covers, plates, and similar items already in place that are removable and are not to be painted. If removal is impractical or impossible because of size or weight of item, provide surface-applied protection before surface preparation and painting.
   1. After completing painting operations, use workers skilled in the trades involved to reinstall items that were removed. Remove surface-applied protection if any.

C. Clean substrates of substances that could impair bond of paints, including dust, dirt, oil, grease, and incompatible paints and encapsulants.
   1. Remove incompatible primers and reprime substrate with compatible primers or apply tie coat as required to produce paint systems indicated.

3.3 APPLICATION

A. Apply paints according to manufacturer's written instructions.

B. Tint each undercoat a lighter shade to facilitate identification of each coat if multiple coats of same material are to be applied. Tint undercoats to match color of topcoat, but provide sufficient difference in shade of undercoats to distinguish each separate coat.

C. If undercoats or other conditions show through topcoat, apply additional coats until cured film has a uniform paint finish, color, and appearance.

D. Apply paints to produce surface films without cloudiness, spotting, holidays, laps, brush marks, roller tracking, runs, sags, ropiness, or other surface imperfections. Cut in sharp lines and color breaks.

3.4 CLEANING AND PROTECTION

A. At end of each workday, remove rubbish, empty cans, rags, and other discarded materials from Project site.

B. After completing paint application, clean spattered surfaces. Remove spattered paints by washing, scraping, or other methods. Do not scratch or damage adjacent finished surfaces.

C. Protect work of other trades against damage from paint application. Correct damage to work of other trades by cleaning, repairing, replacing, and refinishing, as approved by Architect, and leave in an undamaged condition.

D. At completion of construction activities of other trades, touch up and restore damaged or defaced painted surfaces.

3.5 INTERIOR PAINTING SCHEDULE

A. Interior Wood:
   1. Primer: Moore Eco Spec WB Interior Latex Primer Sealer.
   2. 1st and 2nd Finish Coats: Moore Eco Spec WB Interior Latex Semi-Gloss Finish.

B. Interior Gypsum Board:
   1. Primer: Moore Eco Spec WB Interior Latex Primer Sealer.
   2. 1st and 2nd Finish Coats: Moore Eco Spec WB Interior Eggshell Finish.

C. Interior Gypsum Board:
   1. Primer: Moore Eco Spec WB Interior Latex Primer Sealer.
   2. 1st and 2nd Finish Coats: Moore Eco Spec WB Interior Semi-Gloss Finish.

END OF SECTION 099123

SECTION 102800 – TOILET AND BATH ACCESSORIES

PART 1 - GENERAL

1.1 RELATED DOCUMENTS

A. Drawings and general provisions of the Contract, including General and Supplementary Conditions and Division 01 Specification Sections, apply to this Section.

1.2 SUMMARY

A. Section Includes:
   1. Public-use washroom accessories.
   2. Private-use bathroom accessories.

1.3 ACTION SUBMITTALS

A. Product Data: For each type of product indicated. Include the following:
   1. Construction details and dimensions.
   2. Anchoring and mounting requirements, including requirements for cutouts in other work and substrate preparation.
   3. Material and finish descriptions.
   4. Features that will be included for Project.
   5. Manufacturer's warranty.

B. Product Schedule: Indicating types, quantities, sizes, and installation locations by room of each accessory required.
   1. Identify locations using room designations indicated.
   2. Identify products using designations indicated.

1.4 INFORMATIONAL SUBMITTALS

A. Warranty: Sample of special warranty.

1.5 CLOSEOUT SUBMITTALS

A. Maintenance Data: For toilet and bath accessories to include in maintenance manuals.

1.6 QUALITY ASSURANCE

A. Source Limitations: For products listed together in the same Part 2 articles, obtain products from single source from single manufacturer.

B. Electrical Components, Devices, and Accessories: Listed and labeled as defined in NFPA 70, by a qualified testing agency, and marked for intended location and application.

1.7 COORDINATION

A. Coordinate accessory locations with other work to prevent interference with clearances required for access by people with disabilities, and for proper installation, adjustment, operation, cleaning, and servicing of accessories.

B. Deliver inserts and anchoring devices set into concrete or masonry as required to prevent delaying the Work.

1.8 WARRANTY

A. Special Mirror Warranty: Manufacturer's standard form in which manufacturer agrees to replace mirrors that develop visible silver spoilage defects and that fail in materials or workmanship within specified warranty period.
   1. Warranty Period: 15 years from date of Substantial Completion.

PART 2 - PRODUCTS

2.1 MATERIALS

A. Stainless Steel: ASTM A 666, Type 304, 0.031-inch minimum nominal thickness unless otherwise indicated.

B. Brass: ASTM B 19, flat products; ASTM B 16/B 16M, rods, shapes, forgings, and flat products with finished edges; or ASTM B 30, castings.

C. Steel Sheet: ASTM A 1008/A 1008M, Designation CS (cold rolled, commercial steel), 0.036-inch minimum nominal thickness.

D. Galvanized-Steel Sheet: ASTM A 653/A 653M, with G60 hot-dip zinc coating.

E. Galvanized-Steel Mounting Devices: ASTM A 153/A 153M, hot-dip galvanized after fabrication.

F. Fasteners: Screws, bolts, and other devices of same material as accessory unit and tamper-and-theft resistant where exposed, and of galvanized steel where concealed.

G. Chrome Plating: ASTM B 456, Service Condition Number SC 2 (moderate service).

H. Mirrors: ASTM C 1503, Mirror Glazing Quality, clear-glass mirrors, nominal 6.0 mm thick.

I. ABS Plastic: Acrylonitrile-butadiene-styrene resin formulation.

2.2 PUBLIC-USE WASHROOM ACCESSORIES

A. Basis of Design Products: As scheduled on Drawings.

2.3 PRIVATE-USE BATHROOM ACCESSORIES

A. Basis of Design Products: As scheduled on Drawings.

2.4 FABRICATION

A. General: Fabricate units with tight seams and joints, and exposed edges rolled. Hang doors and access panels with full-length, continuous hinges. Equip units for concealed anchorage and with corrosion-resistant backing plates.

B. Keys: Provide universal keys for internal access to accessories for servicing and resupplying. Provide minimum of [six] <Insert number> keys to Owner's representative.

PART 3 - EXECUTION

3.1 INSTALLATION

A. Install accessories according to manufacturers' written instructions, using fasteners appropriate to substrate indicated and recommended by unit manufacturer. Install units level, plumb, and firmly anchored in locations and at heights indicated.

B. Grab Bars: Install to withstand a downward load of at least 250 lbf, when tested according to ASTM F 446.

3.2 ADJUSTING AND CLEANING

A. Adjust accessories for unencumbered, smooth operation. Replace damaged or defective items.

B. Remove temporary labels and protective coatings.

C. Clean and polish exposed surfaces according to manufacturer's written recommendations.

END OF SECTION 102800

SECTION 105500 - POSTAL SPECIALTIES

PART 1 - GENERAL

1.1 SUMMARY

A. Section Includes:
   1. USPS-approved cluster box units (CBUs).

1.2 ACTION SUBMITTALS

A. Product Data: For each type of product indicated.

B. Shop Drawings: For postal specialties. Include plans, elevations, sections, details, and attachments to other work.

C. Samples: For each exposed product and for each color and texture specified.

1.3 INFORMATIONAL SUBMITTALS

A. Product certificates, including written approval by Postmaster General.

B. Other Informational Submittals: Final USPS local postmaster approval for installed postal specialties to be served by USPS.

1.4 CLOSEOUT SUBMITTALS

A. Maintenance data.

1.5 QUALITY ASSURANCE

A. Source Limitations for Each Type of Postal Specialty: For USPS-approved products, use only those included on current lists of USPS manufacturers and models.

B. Preinstallation Conference: Conduct conference at Project site.

1.6 DELIVERY, STORAGE, AND HANDLING

A. Deliver lock keys to Owner by registered mail or overnight package service with a record of each corresponding lock and key number.

1.7 WARRANTY

A. Special Warranty: Manufacturer's standard form in which manufacturer agrees to repair or replace components of postal specialties that fail in materials or workmanship within five years from date of Substantial Completion.

PART 2 - PRODUCTS

2.1 MATERIALS

A. Aluminum: Manufacturer's standard alloy and temper for type of use and finish indicated.

B. Steel Sheet: Cold rolled, ASTM A 1008/A 1008M, Commercial Steel (CS), Type B, exposed matte finish where exposed.

C. Metallic-Coated Steel Sheet: Galvanized-steel sheet, ASTM A 653/A 653M, G60 coating designation, extra smooth where exposed; or electrolytic zinc-coated steel sheet, ASTM A 879/A 879M, Coating Designation 08Z.

D. Stainless-Steel Sheet: ASTM A 666, Type 304.

E. Brass Sheet: ASTM B 36/B 36M, manufacturer's standard copper alloy.

F. Stainless-Steel Anchor Bolts, Nuts, and Washers: ASTM A 193/A 193M, Grade B8M, Type 316.

G. Bituminous Coating: Cold-applied asphalt emulsion complying with ASTM D 1187.

2.2 USPS-APPROVED CLUSTER BOX UNITS (CBUs)

A. General: Multiple compartments enclosed within freestanding, pedestal-mounted enclosure. Provide access to compartments for distributing incoming mail from front of unit by unlocking master lock and swinging pair of side-hinged master doors to provide accessibility to entire group of compartments. Provide access to each compartment for removing mail by swinging compartment door. Comply with USPS-B-1118F.
   1. Basis-of-Design Product: Salsbury Industries; Cluster Box Unit – ADA Accessible. A comparable product by one of the following manufacturers is also acceptable:
      a. Auth-Florence Manufacturing; a Florence company.

B. Compartment Enclosure: Fabricated from aluminum sheet with aluminum mounting pedestal and weather-protection hood, with the following number and size of compartments:
   1. Configuration (Type): Number and arrangement of mail compartments and parcel compartments indicated on Drawings; includes outgoing mail compartment.

C. Compartment Doors and Frames: Fabricated from one-piece extruded aluminum or aluminum sheet. Equip each compartment door with lock, tenant identification, and concealed, full-length, flush hinge on one side. Provide outgoing mail slot with weather protection flap.
   1. Tenant Identification: Number engraved into face of compartment door.
   2. Compartment-Door Locks: Comply with USPS-L-1172C, PSIN O910, for locks and keys, or equivalent as approved by USPS; with three keys for each compartment door. Key each compartment differently.
   3. Parcel-Locker-Door Locks: Two-key security system in which control key provides access to parcel-locker key, which opens compartment and is retained once opened.

D. Pedestal: Aluminum, with same finish as compartment enclosure and attached with theft-resistant fasteners.

E. Exposed Aluminum Finish: Finish surfaces exposed to view with powder-coated finish in postal gray (light gray).

2.3 FABRICATION

A. Form postal specialties to required shapes and sizes, with true lines and angles, square, rigid, and without warp, and with metal faces flat and free of dents or distortion. Make exposed metal edges and corners free of sharp edges and burrs and safe to touch.

B. Preassemble postal specialties in shop to greatest extent possible to minimize field assembly.

C. Form joints exposed to weather to exclude water penetration.

D. Where dissimilar metals will contact each other, protect against galvanic action by painting contact surfaces with bituminous coating or by applying other permanent separation.

PART 3 - EXECUTION

3.1 INSTALLATION

A. General:
   1. Where dissimilar metals will be in permanent contact with each other, protect against galvanic action by painting contact surfaces with bituminous coating or by applying other permanent separation.
   2. Where aluminum will contact grout, concrete, masonry, or wood, protect against corrosion by painting contact surfaces with bituminous coating.
   3. Final acceptance of postal specialties depends on compliance with USPS requirements.

B. Pedestal-Mounted Postal Specialties: Anchor units with 1/2-inch diameter, stainless-steel anchor bolts with hooked ends.

3.2 FIELD QUALITY CONTROL

A. Arrange for USPS personnel to examine and test postal specialties after they have been installed according to USPS regulations.

B. Obtain written final approval from USPS postmaster that authorizes mail collection for the served installation.

END OF SECTION 105500

SECTION 113100 - RESIDENTIAL APPLIANCES

PART 1 - GENERAL

1.1 SUMMARY

A. Section Includes:
   1. Cooking appliances.
   2. Kitchen exhaust ventilation.
   3. Refrigeration appliances.
   4. Cleaning appliances.
   5. Trash compactors.

1.2 ACTION SUBMITTALS

A. Product Data: For each type of product indicated.

1.3 INFORMATIONAL SUBMITTALS

A. Product certificates.

B. Field quality-control reports.

C. Warranties: Sample of special warranties.

1.4 CLOSEOUT SUBMITTALS

A. Operation and maintenance data.

1.5 QUALITY ASSURANCE

A. Installer Qualifications: An employer of workers trained and approved by manufacturer for installation and maintenance of units required for this Project.

1.6 WARRANTY

A. Special Warranties: Manufacturer's standard form in which manufacturer agrees to repair or replace residential appliances or components that fail in materials or workmanship within specified warranty period.
   1. Warranty Period: Two years from date of Substantial Completion.

PART 2 - PRODUCTS

2.1 MANUFACTURERS

A. Basis-of-Design Products: As specified herein.

B. Microwave: Over-the-Range microwave. Stainless steel shell. Recirculating (non-vented ductless).
   1. Basis of Design: GE Appliances; Model No. JVM7195SKSS.

C. Top-Freezer Refrigerator: Stainless steel. ADA compliant.
   1. Basis of Design: GE Appliances; Model No. GTS17GSNRSS.

D. Side-by-Side Refrigerator: Black stainless steel. Integral dispenser.
   1. Basis of Design: GE Appliances; Model No. GSS25IBNTS.

E. Freestanding Electric Range: Stainless steel. Radiant cooktop. Oven. ADA compliant.
   1. Basis of Design: GE Appliances; Model No. JB480SMSS.

F. Dishwasher with Hidden Controls: Stainless steel interior and exterior. ADA compliant. Energy Star certified.
   1. Basis of Design: GE Appliances; Model No. GDT226SSLSS.

PART 3 - EXECUTION

3.1 INSTALLATION, GENERAL

A. Built-in Equipment: Securely anchor units to supporting cabinets or countertops with concealed fasteners. Verify that clearances are adequate for proper functioning and that rough openings are completely concealed.

B. Freestanding Equipment: Place units in final locations after finishes have been completed in each area. Verify that clearances are adequate to properly operate equipment.

C. Range Anti-Tip Device: Install at each range according to manufacturer's written instructions.

D. Utilities: Comply with plumbing and electrical requirements.

3.2 FIELD QUALITY CONTROL

A. Perform tests and inspections.
   1. Manufacturer's Field Service: Engage a factory-authorized service representative to inspect components, assemblies, and equipment installations, including connections, and to assist in testing.

B. Tests and Inspections:
   1. Perform visual, mechanical, and electrical inspection and testing for each appliance according to manufacturers' written recommendations. Certify compliance with each manufacturer's appliance-performance parameters.
   2. Leak Test: After installation, test for leaks. Repair leaks and retest until no leaks exist.
   3. Operational Test: After installation, start units to confirm proper operation.
   4. Test and adjust controls and safeties. Replace damaged and malfunctioning controls and components.

C. Prepare test and inspection reports.

END OF SECTION 113100

SECTION 123623 - PLASTIC-LAMINATE-CLAD COUNTERTOPS

PART 1 - GENERAL

1.1 SUMMARY

A. Section includes plastic-laminate countertops.

1.2 ACTION SUBMITTALS

A. Product Data: For each type of product.

B. Shop Drawings: Show location of each item, dimensioned plans and elevations, large-scale details, attachment devices, and other components.

C. Samples:
1. Plastic laminates, for each color, pattern, and surface finish.

1.3 INFORMATIONAL SUBMITTALS

A. Woodwork Quality Standard Compliance Certificates: AWI Quality Certification Program certificates.

1.4 QUALITY ASSURANCE

A. Fabricator Qualifications: Certified participant in AWI's Quality Certification Program.

B. Installer Qualifications: Fabricator of products.

1.5 FIELD CONDITIONS

A. Environmental Limitations: Do not deliver or install countertops until building is enclosed, wet work is complete, and HVAC system is operating and maintaining temperature and relative humidity at occupancy levels during the remainder of the construction period.

PART 2 - PRODUCTS

2.1 PLASTIC-LAMINATE COUNTERTOPS

A. Quality Standard: Unless otherwise indicated, comply with the "Architectural Woodwork Standards" for grades indicated for construction, installation, and other requirements.

1. Provide labels from AWI certification program indicating that countertops comply with requirements of grades specified.

B. Grade: Premium.

C. High-Pressure Decorative Laminate: NEMA LD 3, Grade HGS.
   1. Basis of Design: As scheduled on Drawings.

D. Colors, Patterns, and Finishes: Provide materials and products that result in colors and textures of exposed laminate surfaces as scheduled on Drawings.

E. Edge Treatment: Same as laminate cladding on horizontal surfaces.

F. Core Material at Sinks: Exterior-grade plywood.

G. Core Thickness: 3/4 inch.

H. Backer Sheet: Provide plastic-laminate backer sheet, NEMA LD 3, Grade BKL, on underside of countertop substrate.

2.2 WOOD MATERIALS

A. Wood Products: Provide materials that comply with requirements of referenced quality standard unless otherwise indicated.
   1. Wood Moisture Content: 8 to 13 percent.

B. Composite Wood and Agrifiber Products: Provide materials that comply with requirements of referenced quality standard for each type of woodwork and quality grade specified unless otherwise indicated.
   1. Softwood Plywood: DOC PS 1.

2.3 MISCELLANEOUS MATERIALS

A. Adhesives: Do not use adhesives that contain urea formaldehyde.

2.4 FABRICATION

A. Fabricate countertops to dimensions, profiles, and details indicated. Provide front and end overhang of 1 inch over base cabinets. Ease edges to radius indicated for the following:

B. Complete fabrication, including assembly, to maximum extent possible before shipment to Project site. Disassemble components only as necessary for shipment and installation. Where necessary for fitting at site, provide ample allowance for scribing, trimming, and fitting.

C. Shop cut openings to maximum extent possible to receive appliances, plumbing fixtures, electrical work, and similar items. Locate openings accurately and use

templates or roughing-in diagrams to produce accurately sized and shaped openings. Sand edges of cutouts to remove splinters and burrs.

1. Seal edges of openings in countertops with a coat of varnish.

PART 3 - EXECUTION

3.1 PREPARATION

A. Before installation, condition countertops to average prevailing humidity conditions in installation areas.

3.2 INSTALLATION

A. Grade: Install countertops to comply with same grade as item to be installed.

B. Assemble countertops and complete fabrication at Project site to the extent that it was not completed in the shop.
   1. Provide cutouts for appliances, plumbing fixtures, electrical work, and similar items.
   2. Seal edges of cutouts by saturating with varnish.

C. Field Jointing: Prepare edges to be joined in shop so Project-site processing of top and edge surfaces is not required.

   1. Secure field joints in plastic-laminate countertops with concealed clamping devices located within 6 inches of front and back edges and at intervals not exceeding 24 inches. Tighten according to manufacturer's written instructions to exert a constant, heavy-clamping pressure at joints.

D. Install countertops level, plumb, true, and straight. Shim as required with concealed shims. Install level and plumb to a tolerance of 1/8 inch in 96 inches.

E. Scribe and cut countertops to fit adjoining work, refinish cut surfaces, and repair damaged finish at cuts.

F. Countertops: Anchor securely by screwing through corner blocks of base cabinets or other supports into underside of countertop.
   1. Install countertops with no more than 1/8 inch in 96-inch sag, bow, or other variation from a straight line.
   2. Secure backsplashes to walls with adhesive.
   3. Seal junctures of tops, splashes, and walls with mildew-resistant silicone sealant or another permanently elastic sealing compound recommended by countertop material manufacturer.

END OF SECTION 123623

SECTION 210000 – FIRE PROTECTION

PART 1 - GENERAL

1.1 RELATED DOCUMENTS

A. The Bidding Requirements and Contractual Conditions set forth in Division 01 apply to this section.

B. Examine other sections of the Project Manual for requirements which affect work of this section whether or not such work is specifically mentioned in this section.

C. Bidders of work in Sections under Division 21 are expected to have read these requirements and, upon subcontracting work called for in such Sections, shall be responsible for compliance with such Sections.

1.2 DEFINITIONS

A. Technical Definitions:

1. "Piping" shall mean pipe, fittings, flanges, valves, controls, hangers, traps, drains, insulation, and items customarily required in connection with the transfer of fluids.
2. "Concealed" shall mean embedded in masonry or other construction, installed within or behind wall furring, within double partitions or hung ceilings, in attics, in crawl spaces, in chases, in shafts, buried in trenches, etc.
3. "Exposed" shall mean not concealed.
4. "Demolition" shall be the removal of any existing component, and the capping or plugging or any existing services. Adjacent surfaces shall be restored to existing conditions.
5. "Furnish" means to purchase and deliver products and equipment to the project site and prepare for installation.
6. "Install" means to assemble, erect, place, anchor and connect furnished products into satisfactory operation.
7. "Provide" means to furnish and install.
8. “Contract Documents” shall include the written Project Manual and the Drawings.
9. Division 21 is the new CSI division replacing the old Division 15 nomenclature, and is hereby defined as interchangeable.
10. Division 26 is the new CSI division replacing the old Division 16 nomenclature. They shall be hereby defined as interchangeable.

1.3 QUALITY ASSURANCE

A. Whenever a reference is made to a standard, installation, or materials, the intention is that the Contractor shall comply with the latest published edition at the time project is bid, unless the edition is otherwise specified herein.

B. Materials and equipment specified herein shall be new and standard catalogued items manufactured by reputable concerns regularly supplying such materials. Material shall bear the Underwriters' Laboratories, Inc. label or other appropriate label where such is required or allowed by code, by Contract Documents or by authorities having jurisdiction.

C. Product deliveries shall be arranged in accordance with construction schedules and to avoid conflict with work and site conditions.

1. Deliver and store products in undamaged condition, in manufacturer's original containers or packaging, with identifying labels intact and legible.
2. Immediately, on delivery, inspect shipments to assure compliance with the requirements of the Contract Documents and approved submittals, and that products are properly protected and undamaged.
3. Provide equipment and personnel to handle products by methods to prevent soiling or damage to products or packaging.

1.4 AMPLIFICATION

A. Except where modified by a specific notation to the contrary, it shall be understood that the indication and/or description of an item, in the Contract Documents, carries with it the intent to provide the item, regardless of whether or not this is explicitly stated as part of the indication or description.

B. The intent of the Contract Documents is to include all items necessary for the proper execution and completion of the work. The Contract Documents are complementary, and what is required by any one shall be as binding as if required by all. Work not covered in the Contract Documents will not be required unless it is consistent therewith and is reasonably inferable as being necessary to produce the intended results. Words and abbreviations which have well-known technical or trade meanings are used in the Contract Documents in accordance with such recognized meanings.

C. In case of discrepancy concerning quality and/or quantity within the Contract Documents, the better quality and/or the greater quantity shall be provided, at no increase to the Contract sum.

D. No exclusions from, or limitations in, the language used in the Contract Documents shall be interpreted as meaning that the appurtenances or accessories necessary to complete any required system or item of equipment are to be omitted.

E. The Drawings, of necessity, utilize symbols and schematic diagrams to indicate various items of work. The work shall be installed, in accordance with the diagrammatic intent

expressed on the drawings, and in conformity with the dimensions indicated on final architectural and structural drawings.

F. Where Contract Documents conflict, such conflict shall be brought to the attention of the Architect for clarification. In general, the Architectural Drawings shall take precedence over the Fire Protection Drawings with regard to building construction. Any change from the Drawings necessary to make the work conform to the building as constructed, to fit the work of other trades or to the rules of authorities having jurisdiction, shall be made at no expense to the Owner.

G. No interpretation shall be made from the limitations of symbols and diagrams that any elements necessary for complete Work are excluded.

H. Certain details appear on the Drawings, which are specific with regard to the dimensioning and positioning of the Work. These details are intended only for the purpose of establishing general feasibility. They do not obviate responsibility for field coordination for the indicated Work.

I. The Architect reserves the right to make minor changes in the location of fire protection work or equipment prior to "roughing-in" without additional cost to the contract. Architect approval for deviations from drawing locations and layout shall be obtained prior to installation.

J. The use of a word in the singular shall not be considered as limiting where other indications denote that more than one item is required.

1.5 QUALIFICATIONS

A. All entities and personnel performing work for this project shall be regularly engaged and experienced in the type of work to be furnished and shall be licensed for such specialty trades, employ only properly qualified foremen, journeymen and apprentices as appropriate and in keeping with best trade practices.

B. Each firm shall provide, upon request, a list of similar jobs it has completed.

1.6 CONSTRUCTION REQUIREMENTS

A. Locations of all pipes, sprinkler heads, etc., as shown on the Drawings are approximate only and are understood to be subject to such revisions as may prove necessary or desirable at the time the work is installed. All work shall be installed with relation to building conditions and shall be installed correct with reference to finished elevations, etc. Exterior utilities shown on the drawings are diagrammatic only, refer to Civil Documents.

B. The Drawings show the general arrangement of the fire protection piping.

C. The Contractor is responsible for the proper location and size of all slots, holes or openings in the building structure pertaining to and for the correct location of pipe sleeves.

D. The Contractor shall so coordinate the work so that it may be installed in the most direct and workmanlike manner. Piping interferences shall be handled by giving precedence to pipe lines, which require a stated slope for proper operation. In all cases, lines requiring a stated grade for their proper operation shall have precedence over electrical conduit, sprinkler piping and ductwork.

E. All piping in finished areas, except where noted to the contrary, shall be installed in chases, furred spaces or above ceilings, etc. In all cases, pipes shall be installed as high as possible.

F. All parts of the system requiring adjustments shall be easily accessible. Provide rated access doors, if require, for proper maintenance of all equipment, valves and devices requiring service.

1.7 PROJECT CONDITIONS

A. All existing utilities shall be located prior to the beginning of work.

B. Adequate means of protection for all existing utilities shall be provided and, if utilities are damaged during working operations, such shall be repaired to the satisfaction of the utility Owner and at no cost to the contract.

1.8 COORDINATION

A. Coordinate the layout of fire protection work with other trades. Locations of structural systems, sprinkler piping, plumbing, and heating/air conditioning work should take preference over the location of conduit runs.

PART 2 – PRODUCTS

2.1 SUPPORTS

A. UL and FM Compliance: Provide products which are Underwriters Laboratories listed and Factory Mutual approved.

B. MSS Standard Compliance:

1. Provide pipe hangers and supports of which materials, design and manufacture comply with ANSI/MSS SP-58.

2. Select and apply pipe hangers and supports, complying with MSS SP-69. Size hangers and supports to support pipe weight and fluid conveyed.
3. Fabricate and install pipe hangers and supports, complying with MSS SP-89.
4. Terminology used in this section is defined in MSS SP-90.

C. Except as otherwise indicated, provide factory-fabricated horizontal piping hangers and supports complying with ANSI/MSS SP-58, of one of the following MSS types listed, selected by installer to suit horizontal piping system, in accordance with MSS SP-69 and manufacturer's published product information. Use only one type by one manufacturer for each piping service. Select size of hangers and supports to exactly fit pipe size for bare piping.

Adjustable Steel Clevises: MSS Type 1.
Pipe Hangers: MSS Type 2.
Steel Double Bolt Pipe Clamps: MSS Type 3.
Steel Pipe Clamps: MSS Type 4.
Pipe Hangers: MSS Type 5.
Adjustable Swivel Pipe Rings: MSS Type 6.
Adjustable Swivel Rings, Band Type: MSS Type 10.
Split Pipe Rings: MSS Type 11.
Extension Split Pipe Clamps: MSS Type 12.
U-Bolt: MSs Type 24.
Clips: MSS Type 26.

2.2 PIPE HANGERS

A. Pipe hangers for all piping shall be Anvil Star or Grinnell of a type suitable for each use. Perforated straps shall not be used in any work. For ferrous pipes up to and including four inches (4") in size, use Anvil Star Fig. 69 carbon steel, adjustable, swivel ring hanger. For piping larger than four inches (4") diameter, use Anvil Star Fig. 260 steel clevis hanger. Where several pipes are parallel at the same elevation, trapeze hangers may be used.

B. Hanger rods sizes shall conform to the following schedule:

Pipe up to and including 4" . . . . . 3/8" rod
Pipe 5" up to and including 8" . . . . . 1/2" rod
Pipe 10" and 12". . . . . 5/8" rod

C. Unless shown otherwise on the Plans, all horizontal runs of ferrous piping shall be suspended from the floor or roof construction, as the case may be, by means of hangers with the following maximum spacing:

Steel Pipe:

Pipe 1" up to and including 1-1/4" . . . . . 12-0 feet
Pipe 1-1/2" thru 8". . . . . 15-0 feet

Threaded Lightwall:
Pipe 1" up to and including 3”.. . . . . .12-0 feet

CPVC Pipe:

Pipe ¾”". . . . . 5-6 feet
Pipe1" . . . .6-0 feet
Pipe 1 ¼”. . . . . .6-6 feet
Pipe 1 1/2”. . . . .7-0 feet
Pipe 2”. . . . .8-0 feet
Pipe 2 1/2”. . . . .9-0 feet
Pipe 3”. . . . .10-0 feet

D. There shall be a hanger within two feet (2') of each elbow or tee. Additional supports shall be provided for valves, etc. Vertical risers shall be supported by approved riser clamps at each floor. Vertical pipes within a space shall not have less than two (2) supports.

E. Supports and hangers shall be installed to permit free expansion and contraction in the piping systems. Hangers shall permit vertical adjustment to maintain proper pitch. Where necessary to control expansion and contraction, the piping shall be guided and firmly anchored. No piping shall be self-supporting; nor shall it be supported from equipment connections.

F. Inserts shall be used where piping or equipment is to be hung from concrete construction. Inserts shall be Red Head, Drop-in anchors. All inserts shall be galvanized to prevent rusting. After the forms are removed, clip off all nails flush with the exposed surface of the inserts.

G. Expansion bolts shall be Ackerman-Johnson.

H. Beam clamps suitable for use with the type of steel construction involved shall be Anvil Star.

2.3 VERTICAL PIPING CLAMPS

A. General: Except as otherwise indicated, provide factory-fabricated vertical piping clamps complying with ANSI/MSS SP-58, of one of the following types listed, selected by installer to suit vertical piping systems, in accordance with MSS SP-69 and manufacturer's published product information. Select size of vertical piping clamps to exactly fit pipe size of bare pipe.

B. Two-Bolt Riser Clamps: MSS Type 8.

C. Four-Bolt Riser Clamps: MSS Type 42.

2.4 HANGER ROD ATTACHMENTS

A. General: Except as otherwise indicated, provide factory-fabricated hanger-rod attachments complying with ANSI/MSS SP-58, of one of the following MSS types listed, selected by installer to suit horizontal piping hangers and building attachments, in accordance with MSS SP-69 and manufacturer's published product information. Use only one type by one manufacturer for each piping service. Select size of hanger rod attachments to suit hanger rods

B. Steel Clevises: MSS Type 14.

C. Swivel Turnbuckles: MSS Type 15.

D. Malleable Iron Sockets: MSS Type 16.

E. Steel Weldless Eye Nuts: MSS Type 17.

2.5 BUILDING ATTACHMENTS

A. General: Except as otherwise indicated, provide factory-fabricated building attachments complying with ANSI/MSS SP-58, of one of the following MSS types listed, selected by Installer to suit building substrate conditions, in accordance with MSS SP-69 and manufacturer's published product information. Select size of building attachments to suit hanger rods.

B. Concrete Inserts: MSS Type 18.

C. Top Beam C-Clamps: MSS Type 19.

D. Side Beam or Channel Clamps: MSS Type 20.

E. Center Beam Clamps: MSS Type 21.

F. Welded Attachments: MSS Type 22.

G. C-Clamps: MSS Type 23.

H. Top I-Beam Clamps: MSS Type 25.

I. Side I-Beam Camps: MSS Type 27.

J. Steel I-Beam Clamps with Eye Nut: MSS Type 28.

K. Steel WF-Beam Clamps with Eye Nut: MSS Type 29.

L. Malleable Beam Clamps: MSS Type 30.

M. Steel Brackets: Heavy Duty: MSS Type 33.

N. Side Beam Brackets: MSS Type 34.

O. Plate Lugs: MSS Type 57.

P. Horizontal Travelers: MSS Type 58.

2.6 MISCELLANEOUS MATERIALS

A. Metal Framing: Provide products complying with NEMA STD ML 1.

B. Steel Plates, Shapes and Bars: Provide products complying with ANSI/ASTM A 36.

C. Cement Grout: Portland cement (ANSI/ASTM C 150, Type I or Type III) and clean uniformly graded, natural sand (ANSI/ASTM C 404, Size No. 2). Mix at a ratio of 1.0 part cement to 3.0 parts sand, by volume, with minimum amount of water required for placement and hydration.

D. Heavy-Duty Steel Trapezes: Fabricate from steel shapes selected for loads required; weld steel in accordance with AWS standards.

E. Install hangers, supports, clamps and attachments to support piping properly from building structure; comply with MSS SP-69. Arrange for grouping of parallel runs of horizontal piping to be supported together on trapeze type hangers where possible. Install supports with maximum spacing complying with MSS SP-69. Where piping of various sizes is to be supported together by trapeze hangers, space hangers for smallest pipe size or install intermediate supports for smaller diameter pipe. Do not use wire or perforated metal to support piping, and do not support piping from other piping, ductwork or other supported mechanical or electrical items.

F. Install hangers and supports complete with necessary inserts, bolts, rods, nuts, washers and other accessories. Except as otherwise indicated for exposed continuous pipe runs, install hangers and supports of same type and style as installed for adjacent similar piping. Provide section drawing for hanger locations to avoid duct interference.

G. Support fire suppression piping independently of all other piping.

2.7 MANUFACTURERS AND INSTALLATION OF PIPE, HANGERS, AND SUPPORTS

A. Available Manufacturers: Subject to compliance with requirements, manufacturer's offering hangers and supports which may be incorporated in the work include, but are not limited to, the following: Anvil Star and ITT Grinnel Corp.

2.8 PIPE PAINTING

TYPE OF SERVICE	BACKGROUND COLOR
Fire Protection Water	Red
Sprinkler-Fire	Red

2.9 BASIC PIPE, TUBE AND FITTINGS

A. Interior Piping:

1. Black Steel Pipe:
   a. Pipe Weight: Schedule 40 up to 2"; Schedule 10 for 2-1/2" and larger.
   b. Fittings: Class 125, cast-iron threaded.
   c. Fittings: Mechanical grooved pipe couplings and fittings; cut-groove type.
   d. Fittings: Mechanical grooved pipe couplings and fittings; roll-groove or mechanical locking type.

2.10 BASIC SUPPORTS, ANCHORS AND SEALS

A. Provide supports, anchors, and seals in accordance with the following listing:

1. Adjustable steel clevises, adjustable steel band hangers, adjustable band hangers, for horizontal piping hangers and supports.
2. Two-bolt riser clamps for vertical piping supports.
3. Steel turnbuckles, and malleable iron sockets for hanger-rod attachments.
4. Concrete inserts, top-beam C-clamps, side beam or channel clamps, and center beam clamps for building attachments.

2.11 BASIC VALVES

A. Interior Valves:

1. Sectional: Butterfly valves, Gate valves, O, S & Y UL listed, supervised.
2. Check: Swing check valves, UL listed.

2.12 SPECIAL VALVES

A. Provide valves, UL listed, of sizes and types which mate and match piping and equipment connections.

B. Hose Outlet Valves: Provide chrome plated brass angle hose valves, 2-1/2" size where not otherwise indicated, complete with caps and chains.

1. Available Manufacturers: Subject to compliance with requirements, manufacturers offering fire hydrants which may be incorporated in the work include, but are not limited to, the following: ITT Grinnel Valve Co. Inc., Kennedy Valve, Nibco, and Viking.

2.13 BASIC METERS AND GAUGES

A. General: Provide meters and gauges in accordance with the following listing:

Pressure gauges 0-250 PSI range.

2.14 FIRE PROTECTION SPECIALTIES

A. Provide fire protection specialties, UL listed, in accordance with the following listing. Provide sizes and types which mate and match piping and equipment connections.

B. Water Flow Indicators: Provide vane-type water flow detectors with retard switch adjustable up to 2 minutes.

C. Electric Bell: Provide 8" waterproof, red enameled finish.

D. Supervisory Switches: Provide products recommended by manufacturer for use in service indicated.

E. Automatic Sprinklers: Provide quick response automatic sprinklers of type indicated on drawings, and in accordance with the following listing. Provide glass bulb 155°F unless otherwise indicated. Provide glass bulbs for 200°F in areas indicated and in electrical closets when required by code.

F. Sprinkler Cabinet and Wrench: Furnish steel, baked red enameled, sprinkler box with spare head capacity per NFPA 13.

G. Available Manufacturers: Subject to compliance with requirements, manufacturers offering fire protection specialties which may be incorporated in the work include, but are not limited to, the following: Elkhart Brass Manufacturing Co., Croker Division, Potter-

Roemer, Inc., Automatic Sprinkler Corp. of America, Grinnell Fire Sprinkler Systems Co., Inc., Reliable Sprinklers, Star Sprinkler Corporation, Viking Corporation and Tyco.

2.15 CPVC PIPING SYSTEMS FOR FIRE PROTECTION SYSTEMS

A. PRODUCT DESCRIPTION

1. BlazeMaster® CPVC fire sprinkler pipe and fittings are extruded/molded from CPVC compounds manufactured by Noveon. The compound shall meet cell class 23447 as defined by ASTM D1784, and shall be certified by NSF International for use with fire sprinkler water.

B. PIPE AND FITTINGS

1. Pipe shall meet or exceed the requirements of ASTM F442 in standard dimension ratio (SDR) 13.5.
2. Fittings shall meet or exceed the requirements of ASTM F437 (schedule 80 threaded), ASTM F438 (schedule 40 socket) and ASTM F439 (schedule 80 socket).
3. Both pipe and fittings shall be listed by Underwriters Laboratories for use in wet automatic fire sprinkler systems and shall bear the logo of the Listing Agency. See UL Fire Protection Equipment Directory, categories VIWT and HFYH.
4. CPVC pipe and fittings shall be Listed by Underwriters Laboratories (UL 1821 Standard) and approved by Factory Mutual Global (FM). See UL Fire Protection Equipment Directory, categories VIWT and HFYH. FM approval shall also include approved for use with prefabricated metallic fire resistant barriers.
5. CPVC compounds used to manufacture the CPVC pipe and fittings shall be listed by Underwriters Laboratories (UL) according to the standards set forth by UL under category code QORR2, Polymeric Materials for use in Pipe and Fittings in Sprinkler Piping – Component.
6. CPVC compounds used to manufacture the CPVC pipe and fittings shall be produced by the same compound manufacturer. Fire sprinkler system pipe and fittings shall not be cross-mixed by various CPVC manufacturers.
7. CPVC compound shall be certified by NSF International.
8. CPVC compound shall meet cell class 23447 as defined by ASTM D1784.
9. CPVC pipe and fittings shall be manufactured from CPVC compounds which have been pressure rated by the Plastics Pipe Institute (PPI). That CPVC compound shall be listed in PPI's most current document entitled "TR-4, Listed Materials, PPI Listing of Hydrostatic Design Basis (HDB), Strength Design Basis (SDB), Pressure Design Basis (PDB) and Minimum Required Strength (MRS) Ratings for Thermoplastic Piping Materials or Pipe".
10. CPVC manufacturer shall conduct a program that lists those fire stops, thread sealants, and leak detectors that are chemically compatible with their CPVC pipe

and fittings. This compatibility program shall be administered by an independent third party testing agency. Only the materials listed in this program shall be used with the CPVC Fire Sprinkler Piping and Fittings.

11. CPVC resin (base CPVC material) and the CPVC compound (CPVC material used to manufacture pipe and fittings) must be manufactured in the United States of America and by a company with headquarters in the United States of America.
12. CPVC compound shall be produced from an ISO certified manufacturer.
13. CPVC pipe shall exceed the requirements of ASTM F442 and manufactured in Standard Dimension Ratio (SDR) 13.5 dimensions. Manufacturer of CPVC pipe shall be able to provide pipe sizes from ¾" inches up to and including 3" inches.
14. CPVC fittings shall meet or exceed the requirements of ASTM F437 (schedule 80 threaded), ASTM F438 (schedule 40 socket) and ASTM F439 (schedule 80 socket).

C. SOLVENT CEMENT

1. All socket type joints shall be made up employing solvent cements that meet or exceed the requirements of ASTM F493. The standard practice for safe handling of solvent cements shall be in accordance with ASTM F402. Solvent cement shall be listed by NSF International for use with potable water, and approved by the CPVC manufacturers. The solvent cements shall be compatible with their CPVC pipe and fittings.
2. Follow CPVC manufacturer's instructions for set and cure times for solvent cement joints. Avoid significant stresses during set and cure times. Do not apply any stress that will disturb an undried joint. Sprinkler fittings shall be allowed to cure in accordance with the manufacturer's guidelines and the contractor shall assure the outlets are clear of any excess cement prior to installing sprinklers.

D. BASIC USE

1. CPVC pipe and fittings shall be listed by UL and also either ULC or C-UL for use in:

a. Light Hazard Occupancies as defined by NFPA 13.
b. Ordinary hazard rooms of otherwise light hazard occupancies where the room does not exceed 400 ft2, per section 6.3.6.2 of NFPA 13, 2002 Edition.
c. Residential Occupancies up to four stories in height as defined by NFPA 13R.
d. One and two family dwellings and manufactured homes as defined by NFPA 13D.
e. Air handling (plenum) spaces as defined by NFPA 90A.
f. Underground water pressure service as defined by NFPA 24.
g. Maximum design temperature/pressure rating shall not be less than 175 psi at 150°F.

h. Refer to LPCB and FM** (if applicable).
i. Refer to CPVC pipe and fitting manufacturers' installation instructions.

E. QUALITY ASSURANCE

1. Installer Qualifications: Contractor Training Certificates for Chlorinated Polyvinyl Chloride (CPVC) Fire Protection Systems. Fire Protection Contractor must submit to the Contracting Officer documentation that lists personnel assigned to this project prior to beginning construction who have successfully completed formal CPVC Fire Protection Systems training conducted by an authorized CPVC manufacturer's representative. The Contractor Training Certificates shall be specific to the manufacturer of the pipe and fittings. Personnel's training certificates must be current and have been updated within the past two (2) years. (Note: this training does not imply compliance with any local or state contractor certification or licensing laws.)

F. SYSTEM DESIGN

1. The CPVC Protection System shall be hydraulically calculated using a Hazen-Williams C Factor of 150, and designed in accordance with the Standard for Installation of Sprinkler Systems, NFPA 13.
2. The maximum design temperature/pressure rating shall not exceed 175 psi at 150°F.
3. BlazeMaster® CPVC pipe and fittings are intended for use at a maximum working pressure of 175 psi at 150°F in accordance with the manufacturer's instructions and appropriate listing agencies.

G. TESTING

1. After the system is installed and any solvent cement is cured per the manufacturer's installation instructions, the systems shall be hydrostatically tested per the requirements of the applicable NFPA Standard (NFPA 13, 13R or 13D).

2.16 FIRE PROTECTION VALVES

A. VALVES

Provide factory-fabricated valves recommended by manufacturer for use in service indicated. Provide valves of types and pressure ratings indicated; provide proper selection as determined by Installer to comply with installation requirements. Provide sizes as indicated, and connections which properly mate with pipe, tube, and equipment connections.

B. GATE VALVES

1. Packing: Select valves designed for repacking under pressure when fully opened, equipped with packing suitable for intended service. Select valves designed so back seating protects packing and stem threads from fluid when valve is fully opened, and equipped with gland follower.
2. Comply with the following standards:

    a. Cast-Iron Valves: MSS SP-70.
    b. Bronze Valves: MSS SP-80.
    c. Steel Valves: ANSI B16.34.
3. For Fire Protection Service:

    a. Threaded Ends 2" and Smaller: Class 175, bronze body, screwed bonnet, rising stem, OS&Y, solid wedge, UL listed.
    b. Flanged Ends 2-1/2" and Larger: Class 175, iron body, bolted bonnet, rising stem, OS&Y, solid wedge, UL listed.
    c. Mechanical Joint Ends 4" and Larger: Class 175, iron body, bolted bonnet, non-rising stem, indicator post flange, solid wedge, UL listed.
    d. Vertical Indicator Post: Cast-iron body, cast-iron sleeve, steel extension rod, target plates and window, malleable iron operating wrench, length of sleeve to suit depth of bury.
4. Available Manufacturers: Subject to compliance with requirements, manufacturers offering gate valves which may be incorporated in the work include, but are not limited to, the following: Kennedy, Grinnell, NIBCO, Inc., United Brass Works, Inc.

C. DRAIN VALVES

1. For Low Pressure Drainage Service:

    a. Threaded Ends 2" and Smaller: Class 150, bronze body, screwed bonnet, rising stem, composition disc, 3/4" hose outlet connection.
    b. Soldered Ends 2" and Smaller: Class 150, bronze body, screwed bonnet, rising stem, composition disc, 3/4" hose outlet connection.
2. Available Manufacturers: Subject to compliance with requirements, manufacturers offering drain valves which may be incorporated in the work include, but are not limited to, the following: NIBCO, Inc., AGF.

D. BUTTERFLY VALVES

1. Comply with MSS SP-67. Provide gear operators on butterfly valves 6" and larger. Butterfly valves shall have a minimum working pressure rating of 150 psig at 150°F and be capable of bubble tight shut-off without a downstream flange at full rated pressure. Available Manufacturers: Subject to compliance with requirements, manufacturers offering butterfly valves which may be incorporated in the work include, but are not limited to the following: Grinnell, NIBCO, Inc., Kennedy, and Viking.

E. SWING CHECK VALVES

1. Construct pressure containing parts of valves as follows:
   a. Bronze Valves, 150 psi: ANSI/ASTM B 62.
2. Comply with MSS SP-71 for design, workmanship, material and testing.
3. Construct valves of pressure castings free of any impregnating materials.
4. Construct valves of bronze, regrinding with seating angle 40 degrees to 45 degrees, unless composition disc is specified.
5. Provide stop plug as renewable stop for disc hanger, unless otherwise specified.
6. Construct disc and hanger as separate parts, with disc free to rotate.
7. Support hanger pins on both ends by removable side plugs.
8. For Fire Protection Service:
   a. Threaded Ends 2-1/2" and Larger: Class 175, iron body bronze mounted, bolted cap, horizontal swing, malleable iron disc, UL listed.
   b. Flanged Ends 2-1/2" and Larger: Class 175, iron body bronze mounted, bolted cap, horizontal swing, malleable iron disc, UL listed.
9. Available Manufacturers: Subject to compliance with requirements, manufacturers offering swing check valves which may be incorporated into the work include, but are not limited to, the following: Grinnell, NIBCO, Inc., Kennedy, United Brass Works, Inc., and Viking.

2.17 IDENTIFICATION OF VALVES

1. All control, drain, and test connection valves shall be provided with a permanently marked weatherproof metal or rigid plastic identification signs.
2. The identification sign shall be secured with corrosion-resistant wire, chain, or other approved means.
3. The control valve sign shall identify the portion of the building served.

PART 3 - EXECUTION

3.1 ORGANIZATION OF THE WORK:

A. All work shall be installed as required to meet all construction schedules.

B. Prior to starting the work, carefully verify all measurements at the site and determine that the work will properly clear openings, structural members and work of other trades.

Correlate the time of each work item with all other trades to the best advantage of the completed job. Furnish, in ample time to avoid delays in the work, all information required to revise footing elevations, structural elements, chases and openings in floors and walls, and to provide clearances which may be required to accommodate the work.

C. Should uncharted or incorrectly charted piping or other utilities be encountered during work operations, notify the Architect/Engineer immediately for clarification.

D. Immediately act to put any damaged utilities back in functioning conditions.

E. At all times while work is taking place, a competent Superintendent in charge shall be on site.

F. Maintain a complete file of all Contract Documents and approved shop drawings at the site.

G. Installation and shop drawings shall be initialed and dated upon installation. This procedure will enable the Architect/Engineer to verify the work in progress.

H. The Contractor shall be responsible for the work until its completion and formal final Substantial Completion. Replace any work which may be damaged, lost or stolen without additional cost to the Owner, while the site is under the control of the contractor.

I. Provide all scaffolding, rigging, hoisting, and services necessary for erection of the work and for delivery to and removal from the premises of any equipment and apparatus furnished. Remove same from premises when no longer required.

J. Keep the premises free from accumulations of waste material or rubbish.

K. Minimize construction noise levels in all locations adjacent to or in occupied areas.

L. The Owner reserves the right to prevent use of any tools which cause detrimental vibration or noise when the facility is occupied.

M. Protect equipment and materials during construction from damage from water, dirt, welding and cutting splatter, paint drippings, etc., by use of shields and drop cloths. Damaged materials shall be repaired or replaced to the Architect's satisfaction.

N. Products stored outside shall be covered with waterproof drop cloth or tarpaulins. Condensation shall be prevented by heating and ventilating as may be required.

O. Provide the following accessory materials for sprinkler systems.

1. All pipe penetrations of rated floors and walls shall be properly sealed in accordance with UL and UL approved details. Coordinate penetrations with the appropriate detail as referenced on the Architectural Drawings.

P. Provide written copy of the approval of the authority having jurisdiction.

3.2 SHOP DRAWINGS AND SUBMITTALS

A. The Architect/Engineer shall have the authority to determine the method of submitting shop drawings.

B. Submittals are required for all sprinkler items.

C. Electronic transmittal (Fax or email) of submittals will not be acknowledged or reviewed.

D. For items reviewed and marked “Rejected” or “Revise and Resubmit”, only one additional submittal will be reviewed to verify product compliance with the Contract Documents. Should further submittals be required for the Design Professional to verify the submittal with the requirements of the Contract Documents, the hourly rate of $150.00 will be billed to the Contractor for the Professional(s) time spent on the review.

E. Manufacturer's catalog cuts may be submitted for all standard cataloged equipment, provided that the item required to meet the project specification is not modified in any way from the standard catalog version. Where multiple products are included on the same cut sheet, clearly identify the product proposed for installation by striking through all sections not applicable to the proposed product.

F. Cuts shall be clearly marked to indicate the exact size, type, rating, capacity, etc., of the item to be provided.

G. Bind shop drawings/catalog-cuts in three ring binders with a title sheet and identification on front and side of the binder. Submit shop drawings and cut sheets all at one time. Allow space for Contractor, Project Architect and Engineer review stamps.

H. All submittals must bear the handwritten signature of the Contractor and his stamp of approval before being considered for review by the Architect/Engineer.

I. Shop drawings that deviate from the requirements of the contract documents shall list all differences in a cover letter attached to top of the submittal. Any unlisted deviations found during review will result in the rejection of the entire submittal. Pipe routes may not be altered strictly for the Contractor's convenience.

3.3 ACCESS DOORS AND PANELS

A. Furnish access doors and panels for proper and adequate access to all valves and other equipment which is concealed in walls, furring and hung ceilings, or where may additionally be necessary.

B. Material and Finish: Access doors shall conform to the finish and rating of adjacent construction as indicated in the finish schedule.

3.4 PAINTING

A. Field painting shall be as specified in the Painting Section of the Specifications. All work shall be left clean and free from oil, dirt and grease prior to field painting.

B. Upon completion, thoroughly clean all piping and other work to remove all dirt, grease, rust and oil. Thoroughly prepare all such work for painting.

C. All fire risers and exposed fire sprinkler piping shall be painted red.

3.5 PENETRATION OF SOUND PROOFING

A. The penetration of any sound proofing materials shall include all necessary materials and labor to provide thorough and complete caulking of all penetrations through walls, partitions and decks, whether such penetration occurs above or below dropped ceiling lines.

3.6 EXCAVATION AND BACKFILL

A. Trench and pit excavating and backfilling inside and outside the building, as required, including shoring and bracing, pumping and protection for safety of persons and property shall be provided as required.

3.7 UNDERGROUND PIPING PROTECTION

A. Protect the exterior surface of all underground steel piping against rust and corrosion. For piping not specified elsewhere to be furnished with factory applied pipe corrosion resistant wrapping, the piping surfaces shall be cleaned of rust, dirt, etc. with a wire brush and shall be free of oil and grease and completely dry. Brush on or otherwise apply as recommended by the manufacturer, a heavy full coating of TC Mastic (Tape Coat Company, Evanston, Illinois) or Reilly Protective Coast Tar Enamel No. 3302 (Reilly Tar and Chemical Company, Indianapolis, Indiana). Dry coating shall be not less than twelve mils thickness.

3.8 CHASING, CUTTING AND PATCHING

A. Provide and place required sleeves, forms and inserts before walls, ceilings, partitions, floors or roofs are built.

B. When it becomes necessary to cut finished materials, submit to the Architect for approval, drawings showing the work required and obtain approval before doing such cutting.

C. Provide exact dimensions and locations of these openings (to suit the apparatus to be used) before such walls are built.

D. No cutting or altering the work of others will be permitted without the approval of the Architect. No structural members shall be cut without the previous written approval of the Architect.

E. Any holes in existing slabs or other concrete or finished work required for the installation of new piping shall be core bored and sealed.

3.9 CLEANING

A. Upon completion, piping and equipment shall be thoroughly cleaned of dirt, grease, rust and oil, primed where necessary, and made ready for painting.

B. Clean gauges and fittings.

3.10 TEST AND INSTRUCTIONS

A. Make tests necessary to establish the adequacy, quality, safety, completed status and satisfactory operation of all systems and components. Tests shall be made to the satisfaction of the Architect/Engineer and the authority having jurisdiction.

B. Provide a letter addressed to the Owner advising that the completed systems have been installed in accordance with the Contract Documents and that such are in proper operating condition. The Owner shall receive a written guarantee covering all defects in workmanship and material for a period of one (1) year from date of Substantial Completion.

3.11 INSTRUCTIONS

A. After the systems are in operation, and tests are complete, instruct the designated personnel of the Owner on the operation and maintenance of all equipment and systems in accordance with NFPA Standards.

3.12 PROJECT CLOSEOUT

A. Prior to request for substantial completion, all fire protection systems shall be verified for proper operation. Substantiation of complete and operational systems shall be verified by submission of the following documents and forms:

1. Completed Operation and Maintenance Manuals.
2. Fire sprinkler certification reports signed by the authority having jurisdiction.

3.13 ADJUST AND CLEAN

A. Sprinkler Piping Flushing: Prior to connecting sprinkler risers for flushing, flush water feed mains, lead-in connections and control portions of sprinkler piping. After fire sprinkler piping installation has been completed and before piping is placed in service, flush entire sprinkler system, as required to remove foreign substances, under pressure as specified in ANSI/NFPA 13. Continue flushing until water is clear, and check to ensure that debris has not clogged sprinklers.

3.14 FIELD QUALITY CONTROL

A. Hydrostatic Testing: After flushing system, test fire sprinkler piping hydrostatically, for period of 2 hours, at not less than 200 psi or at 50 psi in excess of maximum static pressure when maximum static pressure is in excess of 150 psi. Check system for leakage of joints. Measure hydrostatic pressure at low point of each system or zone being tested.

B. Repair or replace piping system as required to eliminate leakage in accordance with ANSI/NFPA standards for "little or no leakage", and retest as specified to demonstrate compliance.

3.15 STOCK OF SPARE SPRINKLERS

A. There shall be maintained on the premises a supply of spare sprinklers (never less than 6) so that any sprinklers that have operated or been damaged in anyway may be promptly replaced. These sprinklers shall correspond to the types and temperature ratings of the sprinklers in the property. The sprinklers shall be kept in a cabinet located where the temperature to which they are subjected will at no time exceed 100°F (38°C).

B. A special sprinkler wrench shall also be provided and kept in the cabinet to be used in the removal and installation of sprinklers. One sprinkler wrench shall be provided for each type of sprinkler installed.

C. The stock of spare sprinklers shall include all types and ratings installed and shall be as follows:

For protected facilities having under 300 sprinklers, not less than six (6) sprinklers.
For protected facilities having 300 to 1,000 sprinklers, not less than twelve (12) sprinklers.
For protected facilities having over 1,000 sprinklers, not less than twenty-four (24) sprinklers.

END OF SECTION 210000

SECTION 22 00 00

PLUMBING

PART 1 - GENERAL

1.1 RELATED DOCUMENTS

A. The Bidding Requirements and Contractual Conditions set forth apply to this section.

B. Examine other sections of the Project Manual for requirements which affect work of this section whether or not such work is specifically mentioned in this section.

C. Bidders of work in other Sections are expected to have read these requirements and, upon subcontracting work called for in such Sections, shall be responsible for compliance with such Sections.

1.2 DEFINITIONS

A. Technical Definitions:

1. "Piping" shall mean pipe, fittings, flanges, valves, controls, hangers, traps, drains, insulation, vents and items customarily required in connection with the transfer of fluids.
2. "Concealed" shall mean embedded in masonry or other construction, installed within or behind wall furring, within double partitions or hung ceilings, in attics, in crawl spaces, in chases, in shafts, buried in trenches, etc.
3. "Exposed" shall mean not concealed.
4. "Demolition" shall be the removal of any existing equipment, and the capping or plugging or any existing services to that equipment. Adjacent surfaces shall be restored to existing conditions and adjacent surfaces.
5. "Furnish" means to purchase and deliver products and equipment to the project site and prepare for installation.
6. "Install" means to assemble, erect, place, anchor and connect furnished products into satisfactory operation.
7. "Provide" means to furnish and install.
8. “Contract Documents” shall include the written Project Manual and the Drawings.
9. Divisions 21, 22 and 23 are the new CSI divisions replacing the old Division 15 nomenclature. They shall be hereby defined as interchangeable.
10. Division 26 is the new CSI division replacing the old Division 16 nomenclature. They shall be hereby defined as interchangeable.

1.3 QUALITY ASSURANCE

A. Standards: Certain standard materials and installation requirements are described by reference to standard specifications. These standards include the following:

ASA - American Standards Association
ASTM - American Society for Testing Materials
ASME - American Society of Mechanical Engineers
NEMA - National Electrical Manufacturers Association
UL - Underwriters Laboratories
ANSI - American National Standards Institute
ASPE - American Society of Plumbing Engineers
AMA - Acoustical Materials Association
NEC - National Electric Code

B. Whenever a reference is made to a standard, installation or a material the intention is that such shall comply with the latest published edition at the time project is bid, unless the edition is otherwise specified herein.

C. Materials and equipment herein shall be new and standard catalogued items manufactured by reputable concerns regularly supplying such materials. Material shall bear the Underwriters' Laboratories, Inc. label or other appropriate label where such is required or allowed by code, by the Contract Documents or by authorities having jurisdiction.

D. Product deliveries shall be arranged in accordance with construction schedules and to avoid conflict with work and site conditions.

1. Deliver and store products in undamaged condition, in manufacturer's original containers or packaging and with identifying labels intact and legible.
2. Immediately upon delivery, inspect shipments to assure compliance with the requirements of the Contract Documents and approved submittals; and that products are properly protected and undamaged.
3. Provide equipment and personnel to handle products by methods that prevent soiling or damage to the products or their packaging.

1.4 AMPLIFICATION

A. Except where modified by a specific notation to the contrary, it shall be understood that the indication and/or description of an item in the Contract Documents carries with it the intent to provide that item, regardless of whether or not it is explicitly stated as part of the indication or description.

B. The intent of the Contract Documents is to include all items necessary for the proper execution and completion of the work. The Contract Documents are complementary, and what is required by any one shall be as binding as if required by all. Work not covered in the Contract Documents will not be required unless it is consistent therewith

and is reasonably inferred as being necessary to produce the intended results. Words and abbreviations which have well-known technical or trade meanings are used in the Contract Documents in accordance with such recognized meanings.

C. In case of discrepancy concerning quality and/or quantity within the Contract Documents, the better quality and/or the greater quantity shall be provided, at no increase to the Contract sum.

D. No exclusions from or limitations in the language used in the Contract Documents shall be interpreted as meaning that the appurtenances or accessories necessary to complete any required system or item of equipment are to be omitted.

E. The Drawings, of necessity, utilize symbols and schematic diagrams to indicate various items of work. The work shall be installed, in accordance with the diagrammatic intent expressed on the drawings, and in conformity with the dimensions indicated on final architectural and structural drawings.

F. Where Contract Documents conflict, such conflict shall be brought to the attention of the Architect/Engineer for clarification. In general, the Architectural Drawings shall take precedence over the Mechanical Drawings with regard to building construction. Any change from the Drawings necessary to make the work conform to the building as constructed, to fit the work of other trades or to comply with the rules of authorities having jurisdiction, shall be made at no expense to the Owner.

G. No interpretation shall be made from the limitations of symbols and diagrams that any elements necessary for complete Work are excluded.

H. Certain details appear on the Drawings, which are specific with regard to the dimensioning and positioning of the Work. These details are intended only for the purpose of establishing general feasibility. They do not prevent responsibility for field coordination of the indicated Work.

I. Capacities, sizes and conditions specified or shown are allowable minimums. Based on design and rated operating conditions of systems, motors shall not be overloaded. Equipment shall not operate at speeds or temperatures greater than manufacturer's published recommendations, and no strain or demand shall be imposed upon any component to any system, structure or building.

J. The Architect/Engineer reserves the right to make minor changes in the location of mechanical work or equipment prior to "roughing-in" without additional cost to the contract. Architect/Engineer approval for deviations from drawing locations and layout shall be obtained prior to installation.

K. The use of a word in the singular shall not be considered as limiting where other indications denote that more than one item is required.

1.5 QUALIFICATIONS

A. All entities and personnel performing work for this project shall be regularly engaged and experienced in the type of work to be provided and shall be licensed for such specialty trades, employ only properly qualified foremen, journeymen and apprentices as appropriate and in keeping with best trade practices.

B. Each firm shall provide, upon request, a list of similar jobs it has completed.

1.6 CONSTRUCTION REQUIREMENTS

A. Locations of all pipes, fixtures, equipment, etc., as shown on the Drawings are approximate only and are understood to be subject to such revisions as may prove necessary or desirable at the time the work is installed. All work shall be installed with relation to building conditions and shall be installed correct with reference to finished elevations, etc. Exterior utilities shown on the drawings are diagrammatic only. Their exact locations, depths and invert elevations shall be as required for proper flow and coordination with other trades.

B. If equipment, piping and fixtures are installed requiring space conditions other than those shown, or arranged, and rearrangement of the space is necessitated, the Architect/Engineer shall review the change before the Contractor proceeds with the work. The request for such changes shall be accomplished by submission of Shop Drawings for the space in question.

C. The Contractor is responsible for the proper location and size of all slots, holes and/or openings in the building structure pertaining to pipe installation and for the correct location of pipe sleeves.

D. The Contractor shall so coordinate the work so that it may be installed in the most direct and workmanlike manner. Piping interferences shall be handled by giving precedence to pipe lines, which require a stated slope for proper operation. Storm and sewer lines and condensate piping shall take precedence over water lines in determination of elevations. Where there is interference between storm and/or sewer lines and condensate lines, the sewer lines shall have precedence and provisions shall be made in the condensate lines for offsetting them around the sewer lines. In all cases, lines requiring a stated grade for their proper operation shall have precedence over electrical conduit and ductwork.

E. All piping in finished areas, except where noted to the contrary, shall be installed in walls, chases, furred spaces, above ceilings, etc. In all cases, pipes shall be installed as high as possible. Runs of piping shall be grouped whenever it is feasible.

F. All oiling devices and all parts of equipment requiring adjustments shall be easily accessible. Provide access doors, if required, for proper maintenance of all equipment and devices requiring service.

1.7 PROJECT CONDITIONS

A. All existing utilities shall be located prior to the beginning of work. Any conflicts shall be resolved and noted on the Record Documents.

B. Adequate means of protection for all utilities shall be provided and, if utilities are damaged during working operations, such shall be repaired to the satisfaction of the utility Owner, at no cost to the contract.

C. Where existing devices are permanently abandoned, each pipe, etc., shall be completely removed and the pipe plugged or capped at a point well behind the proposed new finished closures or newly finished surfaces.

1.8 COORDINATION

A. Coordinate the layout of the plumbing work with all other trades. Locations of plumbing work should take preference over the location of conduit runs.

PART 2 - PRODUCTS

NOT APPLICABLE

PART 3 - EXECUTION

3.1 ORGANIZATION OF THE WORK:

A. All work shall be installed as required to meet all construction schedules.

B. Prior to starting the work, carefully verify all measurements at the site and determine that the work will properly clear openings, structural members and work of other trades. Correlate the time of each work item with all other items to the best advantage of the completed job. Furnish, in ample time to avoid delays in the work, all information required to revise footing elevations, structural elements, chases and openings in floors and walls, and to provide clearances which may be required to accommodate the work. Set all sleeves, anchor bolts and inserts required to accommodate equipment before concrete is poured or masonry is started.

C. Locate existing utilities prior to beginning work. Reroute or replace existing utilities where necessary to permit installation of work. Provide adequate means of protection

for all work, new and existing. Repair existing utilities damaged during work operations to the satisfaction of the utility and at no cost to the contract.

D. Should uncharted or incorrectly charted piping, or other utilities be encountered during work operations, notify the Architect immediately for clarification. Cooperate with utility companies to maintain active utilities in operation.

E. Immediately act to put any damaged utilities back in functioning conditions.

F. At all times while work is taking place, a competent Superintendent in charge shall be on site.

G. Maintain a complete file of all Contract Documents and approved shop drawings at the site.

H. Installation and equipment shop drawings shall be initialed and dated upon installation. This procedure will enable the Architect/Engineer to verify the work in progress.

I. The Contractor shall be responsible for the work until its completion and the formal final Substantial Completion. Replace any work which may be damaged, lost or stolen without additional cost to the Owner, while the site is under the control of the contractor.

J. Provide all scaffolding, rigging, hoisting, and services necessary for erection of the work and for delivery to and removal from the premises of any equipment and apparatus furnished. Remove same from premises when no longer required.

K. Keep the premises free from accumulations of waste material or rubbish.

L. Minimize construction noise levels in all locations adjacent to or in occupied areas.

M. The Owner reserves that right to prevent use of any tools which cause detrimental vibration or noise when the facility is occupied.

N. Protect equipment and materials during construction from damage from water, dirt, welding and cutting splatter, paint drippings, etc., by use of shields and drop cloths. Damaged equipment or materials shall be repaired or replaced to the Architect's/Engineer's satisfaction.

O. Products stored outside shall be covered with waterproof drop cloths or tarpaulins. Condensation shall be prevented by heating and ventilating as may be required.

P. During construction, maintain materials and equipment in an orderly and protected manner.

Q. Provide the following accessory materials for mechanical systems.

1. Anchor bolts or other anchoring devices shall be of the size and type recommended by equipment manufacturer for specific application.
2. Structural support (steel) for elevated or suspended mechanical items shall be made with connections using "simple" framing.
3. Resilient isolation pads for motors and equipment shall be rubber-in-shear pads and of type recommended by manufacturers of the motor and equipment. All air handlers and cooling equipment shall be provided with isolation pads between the equipment and the concrete housekeeping pad.
4. Dielectric fittings shall be provided where copper piping joins steel or iron piping, insulating bushings or unions.
5. Escutcheons shall be provided where pipes pierce exposed partitions, floors, walls or ceilings. Escutcheons shall be chrome plated.
6. All pipe penetrations of rated floors and walls shall be properly sealed in accordance with UL and UL approved details. Coordinate penetrations with the appropriate detail or reference on the Architectural Drawings.

R. Provide a secondary drain pan under all water heaters. Drain pan shall include a full size drain piped to the building exterior.

S. Where specific instructions are not indicated or specified, provide the following items on the installation of motor driven equipment:

1. Provide templates and anchor bolts.
2. For equipment placed on the ground floor or on the structural system, provide a minimum of six inch (6") thick reinforced concrete equipment pad. Provide resilient isolation pads between equipment and slab. Such slabs shall be designed and reinforced to meet the conditions.
3. For suspended equipment, provide structural supports designed to carry all loads, with "simple" framing, anchoring devices and vibration isolation devices reviewed by the Architect/Engineer.

3.2 SHOP DRAWINGS AND SUBMITTALS

A. The Architect/Engineer shall have the authority to determine the method of submitting shop drawings whether in multiple sets or by the reproducible transparency technique.

B. Submittals are required for all items of equipment and all plumbing products.

C. Electronic transmittal (Fax or email) of shop drawings will <u>not</u> be acknowledged or reviewed.

D. For items reviewed and marked “Rejected” or “Revise and Resubmit”, only one additional submittal will be reviewed to verify product compliance with the Contract Documents. Should further submittals be required for the Design Professional to verify

the submittal with the requirements of the Contract Documents, the hourly rate of $125.00 will be billed to the Contractor for the Professional(s) time spent on the review.

E. Submittals shall be referenced to the Contract Documents. For all equipment, which has been scheduled directly on the Drawings, provide within the submittal, a performance schedule for the proposed equipment in the same format as included on the Contract Documents.

F. Manufacturer's catalog cut sheets may be submitted for all standard cataloged equipment, provided that the item required to meet the project specification is not modified in any way from the standard catalog version. Where multiple products are included on the same cut sheet, clearly identify the product proposed for installation by striking through all sections not applicable to the proposed product.

G. Cut sheets shall be clearly marked to indicate the exact size, type, rating, capacity, etc., of the item to be provided.

H. Bind shop drawings/catalog-cuts in three ring binders with a title sheet and identification on front and side of the binder. Submit drawings and cut sheets all at one time. Allow space for Contractor, Project Architect and Engineer review stamps. Index all items to the Project Manual or Drawings as applicable.

I. All submittals must bear the handwritten signature of the Contractor and his stamp of approval before being considered for review by the Architect/Engineer. Submittals shall include sufficient area on the cover for the Architect’s/Engineer’s stamp.

J. Shop drawings and submittals which have not been reviewed and so marked by the Contractor, will be returned to the Contractor for such action before the Architect or his Engineers will review and comment on such submittals.

K. Full submittal shall be made for all equipment (whether or not it is exactly as specified) on the basis of design. Any items marked REJECTED shall be resubmitted and provided exactly as specified. Partial submittals will not be accepted for review and approval.

L. Full electrical characteristics for each motor, piece of equipment or device shall be prominently displayed on the shop drawings or submittal. Additionally, a statement signed by maker of the submittal shall be included indicating that he or she has carefully examined the electrical characteristics specified in the Contract Documents (and if remodeling or an addition, as to existing electrical characteristics), and that the motors, equipment or devices proposed to be furnished are compatible.

The responsibility to provide motors and equipment compatible with the electric service provided shall rest with the supplier furnishing the equipment, at no additional cost to the Contract.

A similar statement shall be included stating the supplier has reviewed the space requirements of the project and that the submitted equipment will fit in the space provided and adequate service requirements have been met.

M. Shop drawings that deviate from the requirements of the contract documents shall list all differences in a cover letter attached to top of the submittal. Any unlisted deviations found during review will result in the rejection of the entire submittal.

3.3 EXAMINATION OF EXISTING CONDITIONS

A. Before submitting proposals, visit and carefully examine those portions of the site and/or existing buildings affected by this work so as to become familiar with the existing conditions and difficulties that will affect the execution of the work.

B. Submission of a proposal will be construed as evidence that such examination has been made. Later claims for labor, equipment, materials, etc. required because of difficulties encountered, which could have been foreseen had such examination been made, will not be recognized.

3.4 ACCESS DOORS AND PANELS

A. Furnish access doors and panels for proper and adequate access to all dampers and other mechanical equipment which is concealed in walls, furring and non-accessible ceilings, or where may additionally be necessary for access to valves and other equipment needing service.

B. Material and Finish: Access doors shall conform to the finish of adjacent construction as indicated in the finish schedule and matches the wall and/or ceiling construction rating.

3.5 ELECTRICAL CONNECTIONS

A. Provide all electrical work and connections except those specifically set forth below as being provided under Division 26 work.

1. The Electrical Subcontractor shall provide under Division 26 all wiring except the following which will be provided under Division 22:
   a. Interlock Wiring.
2. The Electrical Subcontractor shall furnish and install under Division 26 all power wiring complete from power source to motor or equipment junction box.
3. The Electrical Subcontractor shall furnish and install under Division 26 all motor starters and contactors except when specified to be furnished by the equipment manufacturer under Division 22.
4. Conduits:

a. When Conduit is required for wiring, the Electrical Subcontractor shall provide and install same under Division 26. Conduit shall be provided for all work installed within mechanical spaces (exposed) and in walls.

5. Motors:
   a. Motors shall be furnished by the manufacturer or supplier of the specified equipment. All motors shall be of the premium efficiency type.
   b. General purpose motors shall be open drip-proof conforming to NEMA Design B, Class B insulation, continuous 40°C ambient, 60 Hz, 1.15 service factor, and 1800 RPM maximum speed unless specified otherwise. All motors smaller than 3/4 HP shall be self lubricating.
   c. Motors shall be protected with thermal overload devices in the motor, or by the motor starter. Disconnect switch at motors are for service purposes and shall be unfused type.
   d. Single phase motors 1/2 HP and smaller shall have built-in overload protection; over 1/2 HP shall have motor starters as overload protection.
   e. Single Phase motors shall be capacitor start, capacitor run.
   f. Equipment requiring 1,000 Watts or more shall have a power factor of 85% or greater at rated load conditions. Equipment with power factor less than 85% shall be corrected to at least 90% under full load operating conditions. Power factor corrective devices shall be switched with related equipment.
   g. Motor characteristics which change from that specified, due to the Contractor electing to use one of the optional manufacturers, or an updated model, etc., shall be coordinated with the Electrical Contractor prior to bid. This Contractor is responsible for the cost and design of any revisions necessary to provide proper power and control connections in full accordance with the National Electric Code and state and local codes.
   h. Motors 1/2 HP and smaller shall be self lubricated. Larger motors shall be self-lubricated if specified.

B. Each Subcontractor under Division 22 shall furnish and install all low voltage (120V and under) temperature control wiring, for the equipment he furnishes, from the point of connection provided under Division 26.

C. Electrical work provided and installed by Subcontractors under Division 22 shall be performed by licensed Electrical Contractors.

D. Equipment containing various electrical components within its housing shall be furnished with internal wiring arranged to terminate at one set of electrical power lugs. Components shall be approved for group operation as defined by National Electrical Code, or auxiliary equipment must be provided as required to satisfy the National Electrical Code and UL Labels (or other labels) of the unit.

3.6 PAINTING

A. Field painting shall be as specified in the Painting Section of the Specifications. All work shall be left clean and free from oil, dirt and grease prior to field painting.

B. Upon completion, thoroughly clean all equipment, piping and other work to remove all dirt, grease, rust and oil. Clean piping in exposed areas with diluted acetic acid. Thoroughly prepare all such work for painting.

C. Equipment:

1. All equipment shall have factory standard finish.
2. Factory finished equipment which has rusted or been damaged shall be repaired, cleaned, spot primed and entirely repainted the original color.
3. Insulation coverings shall be cleaned, sized (if necessary), and painted for service identification.

D. Ferrous metals which are not exposed to view within the building, such as piping, pipe hangers, angle supports, supports for apparatus, black iron partitions or casings, tanks, etc..., shall be painted with one coat of priming zinc chromate.

E. Ferrous metals which are exposed to view or to the weather, such as pipes, pipe supports, supporting or stiffening angles, vent pipes, etc., shall be painted in accordance with the Painting Section of the Project Manual.

3.7 PENETRATION OF WATERPROOFING (INCLUDING WATERPROOF CONCRETE)

A. Where any work pierces waterproofing, including waterproof concrete, the method of installation shall be approved by the Architect/Engineer before the work is completed.

B. Provide all necessary sleeves, sealant and flashing materials required to make openings absolutely water tight.

3.8 EXCAVATION AND BACKFILL

A. Trench and pit excavating and backfilling inside and outside the building, as required, including shoring and bracing, pumping and protection for safety of persons and property shall be provided as required.

B. Backfill shall be compacted in layers not exceeding six inches (6") in depth. Completed backfill shall conform to surrounding ground and finish grade and with compaction requirements of Division Two of the Project Manual.

1. Concrete encasement: Piping passing under footings, foundations and other locations as shown on drawings shall be encased by eight inches (8") minimum concrete on all sides. Concrete shall conform to Division 03 requirements.
2. Extend concrete encasement eight (8") inches around piping and twelve (12) each side of footings or foundations.

C. Remove non-usable excavated material from the site. Do not remove reusable material from site.

D. Provide and maintain bracing, shoring or sheathing as required to safely support sides of excavations.

E. Provide and operate pumping equipment to keep excavations free of water.

F. Repair and restore paving, streets, curbs, walks, and other work in the area where excavations are made.

G. Provide additional excavation and backfill where required to resolve conflicts in buried lines.

H. Coordinate timing of excavations in advance with other trades.

I. Excavation shall be open cut from the surface.

J. Hold trench width to a minimum.

K. Do not excavate utility trenches parallel to building footings closer than four feet (4') from the footings except by approval of the Architect/Engineer. When parallel trenches require cuts deeper than the building footings, the horizontal distance from the footing shall be equivalent to, or greater than one and one half (1-1/2) times the vertical distance below the footing, but in no case shall the horizontal distance be less than four (4') feet except by the approval of the Architect/Engineer.

L. Mechanical excavation shall be held to four inches (4") above final grade of the bottom of trench. The remainder shall be shaped by manual excavation, so that piping is fully supported on undisturbed soil. Shoring of piping in trench will not be allowed. Piping must be suspended from above.

M. Bell joint holes shall be carefully excavated so that none of the load is supported by the bells or joints.

N. Whenever, in the opinion of the Architect /Engineer, the soil is unsuitable for supporting piping and appurtenances, provisions for proper foundations shall be made at no additional cost to the contract. Soil test reports are bound in the Project Manual.

O. Wherever trenching or excavating, assume utilities may exist in area without such being shown on the drawings. Exercise extreme caution. Should existing facilities be damaged, repair such to Architect's satisfaction at no additional cost to the Contract.

3.9 UNDERGROUND PIPING PROTECTION

A. Protect the exterior surface of all underground steel piping against rust and corrosion. For piping not specified elsewhere to be furnished with factory applied pipe corrosion resistant wrapping, the piping surfaces shall be cleaned of rust, dirt, etc. with a wire brush and shall be free of oil and grease and completely dry. Brush on, or otherwise apply as recommended by the manufacturer, a heavy full coating of TC Mastic (Tape Coat Company, Evanston, Illinois) or Reilly Protective Coast Tar Enamel No. 3302 (Reilly Tar and Chemical Company, Indianapolis, Indiana). Dry coating shall be not less than twelve mils thickness. Protect freshly covered surfaces and delay applying insulation (if required) and delay covering with earth for at least 12 hours as recommended by the manufacturers, and depending on the weather. Cathodic protection shall be provided for all buried ferrous piping.

3.10 CHASING, CUTTING AND PATCHING

A. Provide and place required sleeves, forms and inserts before walls, ceilings, partitions, floors or roofs are built.

B. When it becomes necessary to cut finished materials, submit to the Architect/Engineer for approval, drawings showing the work required and obtain approval before doing such cutting.

C. Provide exact dimensions and locations of these openings (to suit the apparatus to be used) before such walls are built.

D. No cutting or altering the work of others will be permitted without the approval of the Architect/Engineer. No structural members shall be cut without the previous written approval of the Architect/Engineer.

E. Any holes in existing slabs or other concrete slabs or finished work required for the installation of new piping shall be core bored and sealed.

F. Finish patch cut areas with floor tile, drywall, plaster, ceiling panels or tiles as required to match the existing. Paint entire disturbed area to match the existing. Provide new ceiling panels and grid, which may have damaged during construction. Such work shall match existing.

3.11 SLEEVES

A. Sleeves up through 8" diameter shall be Schedule 40 steel pipe (Schedule 40 PVC) and machine cut, as specified below.

B. Sleeves, 10" diameter and larger, shall be fabricated from 12 gauge steel sheet.

C. Watertight seals: "Linkseal" by Thunderline Corporation. Provide correct sleeve size as recommended by the manufacturer.

D. Size sleeves shall provide 1/2" minimum clearance all around pipe or pipe insulation passing through the sleeve. Insulation shall be continuous through sleeves where indicated.

E. Fill space around pipes in sleeves in exposed areas and through fire walls and partitions with non-flammable sealing compound equal to the wall or partition ratings with a UL Rated sealing system.

F. Sleeves through walls shall be cut flush with each surface.

G. Install sleeves plumb and true to line, grade and position.

H. Unused sleeves shall be plugged and finished to match adjacent surface.

I. Pipe sleeves penetrating outside walls shall be packed with insulating material, sealed and made waterproof.

3.12 CLEANING

A. Upon completion, piping and equipment shall be thoroughly cleaned of dirt, grease, rust and oil, primed where necessary, and made ready for painting. Vacuum clean the inside and outside of equipment.

B. Clean galvanized piping in exposed areas with diluted acetic acid.

C. Clean copper piping in exposed areas with emery cloth and solvent.

D. Clean gauges, thermometers, traps, strainers and fittings.

3.13 TEST AND INSTRUCTIONS

A. Make tests necessary to establish the adequacy, quality, safety, completed status and satisfactory operation of all systems and components. Tests shall be made to the satisfaction of the Architect/Engineer. Provide instruments and labor necessary to conduct these tests and have them verified by the Architect/Engineer.

B. Provide a letter addressed to the Owner advising that the completed systems have been installed in accordance with all codes, the Contract Documents and that such are in proper operating condition. The Owner shall receive a written guarantee covering all defects in workmanship and material for a period of one (1) year from date of Substantial Completion. This time period shall be automatically extended until the corrective action is fully complete and satisfactory.

3.14 INSTRUCTIONS

A. After the systems are in operation, and tests are complete, instruct the designated personnel of the Owner on the operation and maintenance of all equipment and systems. Entire session shall be videotaped, with copy provided to the Owner and Architect/Engineer.

3.15 ENGINEER'S PROJECT SITE VISITS

A. When the engineer or his designated representative visits the site to review the installation, all tools, ladders, etc. necessary for the review of the work shall be provided.

B. The Engineer will provide a typed list of deficiencies noted during the site visit for corrective action. Prior to request for supplementary visits, provide an initialed and dated copy of the last report indicating the current status of the noted deficiency corrections.

3.16 PROJECT CLOSEOUT

A. Prior to request for substantial completion, all plumbing systems shall be verified for proper operation and control. Substantiation of complete and operational systems shall be verified by submission of the following documents and forms:

1. Completed Operation and Maintenance Manuals.
2. Health department certification of the potable water systems.
3. Certificate of Compliance with the Boiler Safety Code (F.S. 554.103, 554.109 and 554.110)

END OF SECTION 22 00 00

REQUEST FOR PRIOR APPROVAL

NOTE TO CONTRACTOR: This letter must be sent to the Architect, with copy to the Engineer as per Prior Approval Requirements of the Project Manual (Seven or Ten days as applicable). Facsimile or email is not acceptable. Requests received after the date of Prior Approval will be discarded.

[DATE:]

[ARCHITECT NAME]

Re: [PROJECT NAME]
[ARCHITECT/OTHER] Project No.: _____

Dear _____:

We hereby request approval to bid the following products for this project:

REFER TO PROJECT MANUAL:

Section _____, Paragraph _____: We request that _____ be added as an acceptable manufacturer.

Section _____, Paragraph _____: We request that _____ be added as an acceptable manufacturer.

Section _____, Paragraph _____: We request that _____ be added as an acceptable manufacturer.

We understand that listing of the above manufacturers is for bidding purposes only. The Manufacturer is responsible to meet all capacity, controllability of equipment, space requirements, and service clearances as per basis of design.

[CLOSING SIGNATURE]

SECTION 22 05 23

GENERAL-DUTY VALVES FOR PLUMBING PIPING

PART 1 - GENERAL

1.1 RELATED DOCUMENTS

A. The Bidding Requirements and Contractual Conditions set forth in Division 01 apply to this section.

1.2 DESCRIPTION OF WORK

A. Extent of valves required by this section is indicated on drawings and/or specified in other Division 22 specifications.

B. Types of valves specified in this section include the following:

Gate valves
Globe valves
Ball valves
Butterfly valves
Check valves

C. Valves furnished as part of factory-fabricated equipment, are specified as part of the equipment assembly in other Division 22 sections.

1.3 QUALITY ASSURANCE

A. Manufacturers: Firms regularly engaged in the manufacture of valves, of types and sizes required, whose products have been in satisfactory use in similar service for not less than 5 years.

B. Marking of Valves: Comply with MSS SP-25.

C. Valve Dimensions: For face-to-face and end-to-end dimensions of flanged or welding-end valve bodies, comply with ANSI B16.10.

D. Valves Installed in Boiler Rooms: Comply with ASME Boiler and Pressure Vessel Code.

E. Valve types: Provide valves of same type by same manufacturer.

1.4 SUBMITTALS

A. Product Data: Submit catalog cuts, specifications, installation instructions, and dimensional drawings for each type of valve. Include pressure drop curve or chart for each type and size of valve. Submit valve schedule showing manufacturer's figure number, size, location, and valve features for each required valve.

B. Maintenance Data: Submit maintenance data and spare parts lists for each type of valve. Include this data in Maintenance Manual.

PART 2 - PRODUCT

2.1 VALVES

A. Provide factory-fabricated valves recommended by manufacturer for use in service indicated. Provide valves of types and pressure ratings indicated; provide proper selection as determined by Installer to comply with installation requirements. Provide sizes as indicated, and connections which properly mate with pipe, tube, and equipment connections.

2.2 GATE VALVES

A. Packing: Select valves designed for repacking under pressure when fully opened, equipped with packing suitable for intended service. Select valves designed so back seating protects packing and stem threads from fluid when valve is fully opened, and equipped with gland follower.

B. Comply with the following standards:

1. Cast-Iron Valves: MSS SP-70.
2. Bronze Valves: MSS SP-80.
3. Steel Valves: ANSI B16.34.

C. Manufacturer - Subject to compliance with requirements, provide gate valves of one of the following:

1. Kitz
2. NIBCO
3. Milwaukee

2.3 GLOBE VALVES

A. Packing: Select valves designed for repacking under pressure when fully opened, equipped with packing suitable for intended service. Select valves designed so back

seating protects packing and stem threads from fluid when valve is fully opened, and equipped with gland follower.

B. Composition Discs: Where required, provide suitable material for intended service. For stem throttling service, fit composition disc valve with throttling nut. For metal-seated globe valves, provide hardened stainless steel disc and seat ring.

1. Comply with the following standards:

a. Cast-Iron Valves: MSS SP-85.
b. Bronze Valves: MSS SP-80.

C. For Domestic Water Service:

1. Threaded Ends 2" and Smaller, Class 150, bronze body, union bonnet, rising stem, composition disc.
2. Soldered Ends 2" and Smaller: Class 150, bronze body, screwed bonnet, rising stem, composition disc.
3. Flanged Ends 2-1/2" and Larger: Class 150, iron body, bolted bonnet, rising stem, OS&Y, renewable seat and disc.

D. Manufacturer: Subject to compliance with requirements, provide globe valves of one of the following:

1. Kitz
2. Milwaukee
3. Nibco

2.4 BALL VALVES

A. General: Select with full port opening, blow-out proof stem, hard chrome plated forged brass vented ball, adjustable packing nut, rated not less than 600# W.O.G., 150 W.S.P.

1. Comply with the following standards:

Ball Valves: MSS SP-110

B. For Domestic Water Service:

1. Threaded Ends 3” and Smaller: #600 W.O.G., 150 W.S.P., bronze two piece body, hard chrome plated forged brass vented ball, true adjustable packing nut, blow-out proof stem: Kitz #68, Nibco T-585-70, Milwaukee BA-125, Apollo 77-100 Series, or equal.
2. Soldered Ends 3” and Smaller: 600# W.O.G., 150 W.S.P., bronze two piece body, hard chrome plated forged brass vented ball, true adjustable packing nut,

blow-out proof stem: Kitz #69, Nibco S-585-70, Milwaukee BA-155, Apollo 77-200 Series, or equal.

C. Manufacturer: Subject to compliance with requirements, provide ball valves with one of the following:

1. Kitz
2. Milwaukee
3. Nibco
4. Apollo

2.5 BUTTERFLY VALVES

A. General: Where butterfly valves are used as shut-off for termination, or equipment removal or repair, select ductile iron lug type valves, bi-directional, dead-end service rated to the full working pressure of the valve. Select wafer type valves for other applications.

B. Provide gear operators on butterfly valves 8” and larger. Valve bodies to have extended necks to provide for 2-1/4” insulation as needed. Butterfly valves 12 inch and smaller rated to 200 psi, 14 inch and larger 150 psi.

1. Comply with the following standards:
   a. Butterfly valves: MSS SP-67

C. Manufacturer: Subject to compliance with requirements, provide butterfly valves with one of the following: Kitz #5122B (Wafer type), Kitz #6122E (Lug Type), Milwaukee MW123 (Wafer), ML123 (Lug), Nibco WD2000 (Wafer), LD2000 (Lug) or equal.

2.6 SWING CHECK VALVES

A. Comply with the following standards for design, workmanship, material and testing:

1. Bronze Valves: MSS SP-80
2. Cast Iron Valves: MSS SP-71

B. For Domestic Water Service:

1. Threaded Ends 2” and Smaller: Class 125, bronze body, screwed cap, “Y” pattern swing, bronze disc: Kitz #22, Nibco S-413B, Milwaukee 508 or equal.

2. Soldered Ends 2" and Smaller: Class 125, bronze body, screwed cap, "Y" pattern swing, bronze disc: Kitz #23, Nibco S-413B, Milwaukee 1509 or equal.
3. Flanged Ends 2-1/2" and Larger: Class 125, iron body, bronze mounted, horizontal swing, cast-iron disc: Kitz #78, Nibco F918-B, Milwaukee F2974 or equal.

2.7 VALVE FEATURES

A. General: Provide valves with features indicated and where not otherwise indicated, provide proper valve features as outlined in this specification. Comply with ANSI B31.1.

B. Flanged: Valve flanged comply with ANSI B16.1 (cast iron), ANSI B16.24 (bronze).

C. Threaded: Valve ends complying with B2.1.

D. Solder Joint: Valve ends complying with ANSI B16.18.

E. Wafer: Flangeless valves.

F. Trim: Fabricate pressure-containing components of valves, including stems and seats from brass
or bronze materials; of standard allow recognized in valve manufacturing that resist de zincification.

G. Non-Metallic Disc: Non-metallic material selected for service indicated in accordance with manufacturer's published literature.

H. Renewable Disc: Non-metallic material selected for service indicated in accordance with manufacturer's published literature.

I. Bonnet: Part of gate or globe valve through which stem passes to valve body, and attached to valve body threads, bolts, union, or welding.

J. Solid Wedge: One-piece tapered disc in gate valve, designed for contact with both sides.

K. Outside Screw and Yoke (OS&Y): Stem and hand wheel designed to rotate without rising when valve is operated from closed to open position.

L. Tight Shutoff: Butterfly valve designed for flow regulation, and manufactured to be tight in closed position. Test pressures in accordance with MSS SP-67 as follows: Seat 2-12" 220 psi. No leakage permitted under test.

M. Solder Joint: Valve ends complying with ANSI B.16.18.

N. Extended Stem: Increase stem length by 2” minimum, to accommodate insulatin applied over
valve.

O. Double Disc: Two-piece tapered disc in gate valve, designed for contact on one side of each disc.

P. Parallel Double Disc: Two parallel discs in gate valve, designed for contact by action of separate
wedging block.

PART 3 - EXECUTION

3.1 INSTALLATION

A. Install valves with stems pointed up, in vertical position where possible, but in no case with stems pointed downward for horizontal plane unless unavoidable. Install valve drains with hose-end adapter for each valve that must be installed with stem below horizontal plane.

B. Insulation: Where insulation is indicated, install extended-stem valves, arranged in proper manner to receive insulation.

C. Applications Subject to Shock: Install valves with bodies of metal other than cast-iron where thermal or mechanical shock is indicated or can be expected to occur.

D. Applications Subject to Corrosion: Do not install bronze valves and valve components in direct contact with steel, unless bronze and steel are separated by dielectric insulator. Install bronze valves in steam and condensate service and in other services where corrosion is indicated or can be expected to occur.

E. Selection of Valve Ends (Pipe Connections): Except as otherwise indicated, select and install with the following ends or types of pipe/tube connections.

1. Tube Size 2" and Smaller: Solder joint valves.
2. Pipe Size 2" and Smaller:
   Threaded valves
   Grooved end valves
3. Pipe Size 2-1/2" and Larger:
   Grooved end valves
   Flanged valves
   Wafer valves
   Single flange valves

F. Valve System: Select and install valves with outside screw and yoke stems, provide inside screw non-rising stem valves where headroom prevents full opening of OS&Y valves.

G. Non-Metallic Disc: Limit selection and installation of valves with non-metallic discs to locations indicated and where foreign material in piping system can be expected to prevent tight shutoff of metal seated valves.

H. Renewable Seats: Select and install valves with renewable seats, except where otherwise indicated.

I. Fluid Control: Except as otherwise indicated, install gate, ball and/or globe valves to comply with ANSI B31.1. Where throttling is indicated or recognized as principal reason for valve, install globe or butterfly valves.

J. Installation of Check Valves:

1. Swing Check Valves: Install in horizontal position with hinge pin horizontally perpendicular to centerline of pipe. Install for proper direction of flow in pump discharge lines.
2. Horizontal Lift Check Valve: Install in horizontal piping line with stem vertically upward, position for proper direction of flow.
3. Vertical Lift Check Valve: Install in vertical piping line with upward flow with stem vertically upward.
4. Spring Loaded Horizontal Lift Check Valve: Install in horizontal piping line with stem vertically upward, position for proper direction of flow.

K. Valves shall have shaft extension to facilitate insulation installation.

END OF SECTION 22 05 23

SECTION 22 05 29

HANGERS AND SUPPORTS FOR PLUMBING PIPING AND EQUIPMENT

PART 1 - GENERAL

1.1 WORK INCLUDED

A. Provide supports and hangers for all piping and piping system components.

B. Provide supports and hangers for all equipment.

C. Examine other sections of the Project Manual for requirements which affect work of this section whether or not such work is specifically mentioned in this section.

D. Provide steel angles and channels between structural members as necessary to support piping and equipment.

1.2 RELATED WORK

A. The Bidding Requirements and Contractual Conditions set forth in Division 01 apply to this section.

1.3 QUALITY ASSURANCE

A. Meet the requirements of the following:

1. MSS SP 58-2002 Pipe Hangers and Supports.
2. ANSI Code for Pressure Piping.
3. Hangers and supports shall have a stress safety factor of 5.
4. ASTM, UL, NFPA.

1.4 SUBMITTALS

A. Submit manufacturer's product data for the following:

Hangers
Supports
Inserts

1.5 COORDINATION

A. Obtain Structural Engineer’s approval before welding, drilling or cutting any structural members.

B. Coordinate runs of piping and install equipment as may be required to utilize available structural members.

PART 2 - PRODUCTS

2.1 MANUFACTURERS

A. Products are based on Grinnell as a standard, unless specified otherwise.

B. Optional manufacturers: Grinnell, Elcen, F & S, Fee & Mason or Michigan.

2.2 STRUCTURE ATTACHMENT DEVICES

A. Riser clamp, steel: Grinnell Fig. 261. Provide masonry or concrete bearing.

B. Riser clamp, copper: Grinnell Fig. CT-121, copper plated. Provide masonry or concrete bearing.

C. Top beam clamp: Grinnell Fig. 227 with Fig. 157 extension.

D. Bottom beam clamp: Grinnell Fig. 229. (Use only where top clamps are not possible. Obtain approval from Engineer).

E. Side beam bracket: Grinnell Fig. 202. (For wood construction only.)

F. Horizontal traveler: Grinnell Fig. 170

G. Concrete inserts: Grinnell Fig. 282, galvanized.

H. Concrete fasteners: Phillips "Red Head."

I. Copper tube strap: Grinnell Fig. 9124.

J. Pipe strap: Grinnell Fig. 153.

K. Pipe hanger flange: Grinnell Fig. 153.

L. Bottom channel clamp: Grinnell Fig. 226 with 157 extension. (Obtain approval from Engineer prior to use.)

M. Bottom beam/joist C clamp: Grinnell Fig. 87 with retaining clip and locknut. (Obtain approval from Engineer prior to use on pipes 2" and smaller.)

2.3 HANGERS AND ACCESSORIES

A. Adjustable copper tubing ring: Grinnell Fig. CT-99, copper plated.

B. Adjustable swivel split ring: Grinnell Fig. 104, black finish.

C. Adjustable pipe ring, plastic coated: Grinnell Fig. CT-99c, plastic coated.

D. Heavy adjustable clevis: Grinnell Fig. 260, black finish.

E. Lightweight adjustable clevis: Grinnell Fig. 65, black finish.

F. Pipe roll stand (base supported): Grinnell Fig. 271, cast iron roll.

G. Adjustable pipe roll: Grinnell Fig. 181.

H. Pre-engineered spring hanger: Grinnell Figs. B-268, 82 or 98.

I. Insulated pipe saddle: Hot lines - high density pre-compressed fiberglass support segment with 18 gage galvanized steel shield. Cold lines - provide "Foamglass" pipe insulation with jacket and 18 ga. galvanized steel shield. Insulation thickness shall be same as specified in the insulation section of this specification.

2.4 HANGER RODS AND ACCESSORIES

A. Provide plated steel threaded rods.

B. Provide all necessary couplings, turnbuckles, nuts, washers, and accessories for a complete installation.

2.5 TRAPEZE COMPONENTS

A. Horizontal trapeze member: Unistrut P-2700 series channel, standard or heavy duty according to load.

B. Trapeze clamp: Unistrut two piece bolted pipe clamp; steel for steel pipes, copper for copper pipes.

2.6 EQUIPMENT SUPPORTS

A. Provide 3 x 3 x 1/4 angles or heavier, if required, spanning 3 structural joints to support hung equipment.

B. Provide channels (strength as required) to span between beams. Weld to beams. Obtain approval of Structural Engineer before proceeding.

PART 3 - EXECUTION

3.1 PIPE SUPPORT METHODS

A.

CONDITION	SUPPORT METHOD
Uninsulated copper pipe horizontal, hung.	Adjustable plastic coated tubing ring and hanger rod.
Uninsulated copper pipe horizontal, bottom support.	Plastic coated tube strap. Provide necessary angle braces.
Uninsulated copper pipe vertical	Plastic coated tube strap to walls with anchors. Riser clamp at floors.
Uninsulated metal drain pipe horizontal, hung.	Heavy adjustable clevis, hanger rod.
Uninsulated metal drain pipe vertical.	One hole clamp at walls. Riser clamp, steel at floors.
Insulated pipe horizontal, bottom support.	Insulated pipe saddle, pipe roll stand.

Notes:
1. Install pipe saddles as pipe is installed.
2. Trapeze hangers may be used for multiple horizontal hung pipe runs. Trapeze consists of hanger rods, horizontal trapeze member, and trapeze clamps. Each pipe shall be individually attached to trapeze.
3. Hangers shall be isolated from dissimilar metals with dielectric fittings.

3.2 SUPPORT SPACING AND HANGER ROD DIAMETERS

A. Cast iron, ductile iron, steel and copper pipes shall be in compliance with the FBC, Plumbing, Table 308.5 Hanger Spacing.

1. Maximum support spacing for horizontal cast iron drain and vent lines is one support at each joint (i.e., 5' spacing for 5' lengths, 10' spacing for 10' lengths, etc.).
2. Provide additional supports at turns, valves, concentrated loads connections to equipment and where necessary for proper alignment.

3.3 STRUCTURE ATTACHMENT METHODS

A.

CONDITION	SUPPORT METHOD
Hanger rod to steel bar or truss.	Top beam clamp.
Hanger rod to steel beam (Corrugated metal deck above).	Top beam clamp.
Hanger rod to steel beam (concrete deck above, temporary form).	Bottom beam clamp.
Hanger rod to precast or existing concrete deck.	Concrete fasteners, pipe hanger flange.
Hanger rod to new cast-in-place concrete deck.	Concrete insert.
Hanger rod to wood beam.	Side beam bracket, lag bolt to beam (use bolt through entire beam when load exceeds mfg's recommended load for lag bolt application).
Hanger rod to any structure at elbows with significant lateral movement.	Horizontal traveler
Hanger rod to any structure at risers with significant vertical movement.	Pre-engineered spring hanger.
Hanger rod to any structure at risers from vibrating equipment.	Pre-engineered spring hanger.

Notes:
1. Do not install hangers from metal roof deck.
2. Avoid drilling concrete by using inserts.
3. Explosive powder driven fasteners are not acceptable and shall not be used.
4. Weld to steel structural members. In wood construction where pipe is parallel to, and hanging from joists, rafters, or beams bolt angles to side of members

vertically, bolt horizontal angles to side of members vertically, bolt horizontal angles to vertical angles, attach hanger rods to horizontal angles. Consult with Structural Engineer and affected trades regarding procedure.

5. Vertical piping shall be anchored to building with two-point bearing.

3.4 VIBRATING EQUIPMENT

A. In-line pump support: Contractor shall provide a calibrated spring-hanger as approved by the pump manufacturer. The spring shall support the pump at approximately the center of gravity and shall reduce the piping load to less than 10% of the weight of the pump at room temperature.

B. Support piping at pumps and equipment from floor, ceiling or walls, so that piping weight is not supported from pumps or equipment. Provide pipe stands as required.

3.5 WET AREA AND EXTERIOR SUPPORTS

A. Use non-ferrous, galvanized steel, plated steel or plastic coated steel supports and hangers in exterior applications.

3.6 ADDITIONAL REQUIREMENTS

A. Properly support pipe to maintain required alignment, slopes, and expansion capabilities.

B. Piping shall be supported independently from the building structure. Where interferences occur, provide trapeze type hangers or other suitable supports for each system. Locate hangers and supports where they will not interfere with access to valves and other appurtenances requiring service.

C. Whenever mechanical equipment rooms are located within or immediately adjacent to the occupied building, vibration dampening hangers and supports shall be used.

END OF SECTION 22 05 29

SECTION 22 05 30

SUPPORTS, ANCHORS, AND SEALS - PLUMBING

PART 1 - GENERAL

1.1 WORK INVOLVED

A. Extent of supports, anchors, and seals required by this section is indicated on drawings and/or specified in other Division 22 sections.

B. Types of supports, anchors, and seals specified in this section include the following:

1. Horizontal piping hangers and supports
2. Vertical piping clamps
3. Hanger rod attachments
4. Building attachments
5. Saddles and shields
6. Flashing materials
7. Miscellaneous materials
8. Anchors

C. Supports, anchors and seals furnished as part of factory-fabricated equipment are specified as part of the equipment assembly in other Division 22 sections.

1.2 RELATED WORK

A. The Bidding Requirements and Contractual Conditions set forth in Division 01 apply to this section.

1.3 QUALITY ASSURANCE

A. Manufacturers: Firms regularly engaged in the manufacture of supports, anchors and seals of types and sizes required, whose products have been in satisfactory use in similar service for not less than 5 years.

B. MSS Standard Compliance:

1. Provide pipe hangers and supports of which materials, design and manufacture comply with ANSI/MSS SP-58.
2. Select and apply pipe hangers and supports, complying with MSS SP-69. Size hangers and supports to support pipe weight and fluid conveyed.
3. Fabricate and install pipe hangers and supports, complying with MSS SP-89.
4. Terminology used in this section is defined in MSS SP-90.

1.4 SUBMITTALS

A. Product Data: Submit catalog cuts, specifications, installation instructions and dimensioned drawings for each type of support, anchor and seal. Include a schedule of supports, anchors and seals to be used.

PART 2 - PRODUCTS

2.1 HORIZONTAL PIPING HANGERS AND SUPPORTS

A. General: Except as otherwise indicated, provide factory-fabricated horizontal piping hangers and supports complying with ANSI/MSS SP-58, of one of the following MSS types listed, selected by installer to suit horizontal piping system, in accordance with MSS SP-69 and manufacturer's published product information. Use only one type by one manufacturer for each piping service. Select size of hangers and supports to exactly fit pipe size for bare piping, and to exactly fit around piping insulation with saddle or shield for insulated piping. Provide copper-plated hangers and supports for copper piping systems.

B. Adjustable Steel Clevises: MSS Type 1.

C. Pipe Hangers: MSS Type 2.

D. Steel Double Bolt Pipe Clamps: MSS Type 3.

E. Steel Pipe Clamps: MSS Type 4.

F. Pipe Hangers: MSS Type 5.

G. Adjustable Swivel Pipe Rings: MSS Type 6.

H. Adjustable Swivel Rings, Band Type: MSS Type 10.

I. Split Pipe Rings: MSS Type 11.

J. Extension Split Pipe Clamps: MSS Type 12.

K. U-Bolt: MSs Type 24.

L. Clips: MSS Type 26.

M. Pipe Saddle Supports: MSS Type 36, including steel pipe base support and cast-iron floor flange.

N. Pipe Stanchion Saddles: MSS Type 37, including steel pipe base support and cast-iron floor flange.

O. Adjustable Pipe Saddle Supports: MSS Type 38 including steel pipe base support and cast-iron floor flange.

P. Single Pipe Rolls: MSS Type 41.

Q. Adjustable Roller Hangers: MSS Type 43.

R. Pipe Roll Stands: MSS Type 44.

S. Pipe Rolls and Plates: MSS Type 45.

T. Adjustable Pipe Roll Stands: MSS Type 46.

2.2 PIPE HANGERS

A. Pipe hangers for all piping including sprinkler piping shall be Fee and Mason or Grinnell of a type suitable for each use. Perforated straps shall not be used in any work. For ferrous pipes up to and including four inches (4") in size, use Fee and Mason Fig. 199 malleable iron, adjustable, split ring, swivel hanger. For plumbing piping larger than four inches (4") diameter, use Fee and Mason Fig. 239 steel clevis hanger. Where several pipes are parallel at the same elevation, trapeze hangers may be used. Where trapeze hangers are used, the pipes shall be supported on rollers where rollers are called for by the above specifications. For copper pipes up to and including three inches (3") in size, use Fee and Mason Fig. 360 malleable iron, plastic coated hangers. For copper pipes larger than three inches (3") use Fee and Mason Fig. 364 plastic coated clevis hanger.

B. Hanger rods sizes shall conform to the following schedule:

Pipe up to and including 2" . . . . . 3/8" rods
Pipe 2-1/2", 3" and 3-1/2" . . . . . 1/2" rods
Pipe 4" and 5". . . . . 5/8" rods
Pipe 6" . . . . . 3/4" rods
Pipe 8", 10" and 12". . . . . .7/8" rods

Pipe 14" and larger . . . . . .1" rods

C. Unless shown otherwise on the Plans, all horizontal runs of ferrous piping shall be suspended from the floor or roof construction, as the case may be, by means of hangers with the following maximum spacing:

Pipe up to and including 8” . . . . . 5 feet

D. Unless shown otherwise on the Plants, all horizontal runs of copper tubing shall be suspended from the floor or roof construction as the case may be, by means of hangers with the following maximum spacing:

Pipe up to 1-1/4" in size . . . . . 6 feet
Pipe 1-1/2" and larger. . . . . 10 feet

E. There shall be a hanger within two feet (2') of each elbow or tee. Additional supports shall be provided at valves, strainers, etc. Cast iron pipe shall have not less than one hanger per length of pipe. Vertical risers shall be supported by approved riser clamps at each floor. Vertical pipes within a space shall not have less than two (2) supports.

F. Supports and hangers shall be installed to permit free expansion and contraction in the piping systems. Hangers shall permit vertical adjustment to maintain proper pitch. Where necessary to control expansion and contraction, the piping shall be guided and firmly anchored. No piping shall be self-supporting; nor shall it be supported from equipment connections.

G. Inserts shall be used where piping or equipment is to be hung from concrete construction. Inserts shall be Grinnell Fig. 281, wedge type, concrete inserts. All inserts shall be galvanized to prevent rusting. After the forms are removed, clip off all nails flush with the exposed surface of the inserts.

H. Expansion bolts shall be Ackerman-Johnson.

I. Beam clamps suitable for use with the type of steel construction involved shall be Grinnell.

J. Domestic hot water, domestic cold water piping, and horizontal rainwater piping hangers shall be sized to go around the insulation with saddles being provided to protect the insulation.

2.3 VERTICAL PIPING CLAMPS

A. General: Except as otherwise indicated, provide factory-fabricated vertical piping clamps complying with ANSI/MSS SP-58, of one of the following types listed, selected by installer to suit vertical piping systems, in accordance with MSS SP-69 and manufac-

turer's published product information. Select size of vertical piping clamps to exactly fit pipe size of bare pipe. Provide plastic coated clamps for copper piping systems.

B. Two-Bolt Riser Clamps: MSS Type 8.

C. Four-Bolt Riser Clamps: MSS Type 42.

2.4 HANGER ROD ATTACHMENTS

A. General: Except as otherwise indicated, provide factory-fabricated hanger-rod attachments complying with ANSI/MSS SP-58, of one of the following MSS types listed, selected by installer to suit horizontal piping hangers and building attachments, in accordance with MSS SP-69 and manufacturer's published product information. Use only one type by one manufacturer for each piping service. Select size of hanger rod attachments to suit hanger rods. Provide plastic coated hanger rod attachments for copper piping systems.

B. Steel Clevises: MSS Type 14.

C. Swivel Turnbuckles: MSS Type 15.

D. Malleable Iron Sockets: MSS Type 16.

E. Steel Weldless Eye Nuts: MSS Type 17.

2.5 BUILDING ATTACHMENTS

A. General: Except as otherwise indicated, provide factory-fabricated building attachments complying with ANSI/MSS SP-58, of one of the following MSS types listed, selected by Installer to suit building substrate conditions, in accordance with MSS SP-69 and manufacturer's published product information. Select size of building attachments to suit hanger rods. Provide plastic coated building attachments for copper piping systems.

B. Concrete Inserts: MSS Type 18

C. Top Beam C-Clamps: MSS Type 19

D. Side Beam or Channel Clamps: MSS Type 20.

E. Center Beam Clamps: MSS Type 21.

F. Welded Attachments: MSS Type 22.

G. C-Clamps: MSS Type 23.

H. Top I-Beam Clamps: MSS Type 25.

I. Side I-Beam Camps: MSS Type 27.

J. Steel I-Beam Clamps with Eye Nut: MSS Type 28.

K. Steel WF-Beam Clamps with Eye Nut: MSS Type 29.

L. Malleable Beam Clamps: MSS Type 30.

M. Steel Brackets: One of the following for indicated loading:

Heavy Duty: MSS Type 33

N. Side Beam Brackets: MSS Type 34.

O. Plate Lugs: MSS Type 57.

P. Horizontal Travelers: MSS Type 58.

2.6 SADDLES AND SHIELDS

A. General: Except as otherwise indicated, provide saddles or shields for piping hangers and supports, factory-fabricated, for all insulated piping. Size saddles and shields for exact fit to mate with pipe insulation.

B. Protection Saddles: MSS Type 39; fill interior voids with segments of insulation matching adjoining insulation.

C. Protection Shields: MSS Type 40; of length recommended by manufacturer to prevent crushing of insulation.

D. Thermal Hanger Shields: Constructed of 360 degrees of high density, 100 psi, water-proofed calcium silicate, encased in 360 degrees sheet metal shield. Provide assembly of same thickness as adjoining insulation.

E. Available Manufacturers: Subject to compliance with requirements, manufacturer's offering thermal hanger shields which may be incorporated in the work include, but are not limited to the following:

C & S Mfg. Corp.
Elcen Metal Products Co.
Fee & Mason Manufacturing Co., Div. of A-T-O Inc.
ITT Grinnel Corp.

Pipe Shields, Inc.

2.7 MANUFACTURERS OF HANGERS AND SUPPORTS

A. Available Manufacturers: Subject to compliance with requirements, manufacturer's offering hangers and supports which may be incorporated in the work include, but are not limited to, the following:

C & S Mfg. Corp.
Elcen Metal Products Co.
Fee & Mason Mfg. Co., Div. of A-T-O Inc.
ITT Grinnel Corp.

2.8 MISCELLANEOUS MATERIALS

A. Metal Framing: Provide products complying with NEMA STD ML 1.

B. Steel Plates, Shapes and Bars: Provide products complying with ANSI/ASTM A 36.

C. Cement Grout: Portland cement (ANSI/ASTM C 150, Type I or Type III) and clean uniformly graded, natural sand (ANSI/ASTM C 404, Size No. 2). Mix at a ratio of 1.0 part cement to 3.0 parts sand, by volume, with minimum amount of water required for placement and hydration.

D. Heavy-Duty Steel Trapezes: Fabricate from steel shapes selected for loads required; weld steel in accordance with AWS standards.

E. Pipe Guides: Provide factory-fabricated guides, of cast semi-steel or heavy fabricated steel, consisting of a bolted two-section outer cylinder and base with a two-section guiding spider bolted tight to pipe. Size guide and spider to clear pipe and insulation (if any) and cylinder. Provide guides of length recommended by manufacturer to allow indicated travel.

PART 3 - EXECUTION

3.1 PREPARATION

A. Proceed with installation of hangers, supports and anchors only after required building structural work has been completed in areas where the work is to be installed. Correct inadequacies including (but not limited to) proper placement of inserts, anchors and other building structural attachments as may be required.

3.2 INSTALLATION OF BUILDING ATTACHMENTS

A. Install building attachments at required locations, within concrete or on structural steel for proper piping support. Space attachments within maximum piping span length indicated in MSS SP-69. Install additional building attachments where support is required for additional concentrated loads, including valves, flanges, guides, strainers, expansion joints, and at changes in direction of piping. Install concrete inserts before concrete is placed; fasten insert securely to forms. Where concrete with compressive strength less than 2500 psi is indicated, install reinforcing bars through openings at top of inserts.

3.3 INSTALLATION OF HANGERS AND SUPPORTS

A. Install hangers, supports, clamps and attachments to support piping properly from building structure; comply with MSS SP-69. Arrange for grouping of parallel runs of horizontal piping to be supported together on trapeze type hangers where possible. Install supports with maximum spacing complying with MSS SP-69. Where piping of various sizes is to be supported together by trapeze hangers, space hangers for smallest pipe size or install intermediate supports for smaller diameter pipe. Do not use wire or perforated metal to support piping, and do not support piping from other piping, ductwork or other supported mechanical or electrical items.

B. Supports and hangers shall be installed to permit free expansion and contraction in the piping systems. Hangers shall permit vertical adjustment to maintain proper pitch. Where necessary to control expansion and contraction, the piping shall be guided and firmly anchored. No piping shall be self-supporting; nor shall it be supported from equipment connections.

C. Install hangers and supports complete with necessary inserts, bolts, rods, nuts, washers and other accessories. Except as otherwise indicated for exposed continuous pipe runs, install hangers and supports of same type and style as installed for adjacent similar piping. Provide section drawing for hanger locations to avoid duct interference.

D. Prevent electrolysis in support of copper tubing by use of hangers and support which are copper-plated, or by other recognized industry methods.

E. Provisions for Movement:

1. Install hangers and supports to allow controlled movement of piping systems and to permit freedom of movement between pipe anchors, and to facilitate action of expansion joints, expansion loops, expansion bends and similar units.
2. Load Distribution: Install hangers and supports so that piping live and dead loading and stresses from movement will not be transmitted to connected equipment.
3. Pipe Slopes: Install hangers and supports to provide indicated pipe slopes, and so that maximum pipe deflections allowed by ANSI B31 are not exceeded.
4. Insulated Piping: Comply with the following installation requirements.

a. Clamps: Attach clamps, including spacers (if any), to piping with clamps projecting through insulation; do not exceed pipe stresses allowed by ANSI B31.
b. Shields: Where low compressive strength insulation or vapor barriers are indicated on cold or chilled water piping, install coated protective shields.
c. Saddles: Where insulation without vapor barrier is indicated, install protection saddles.

3.4 INSTALLATION OF ANCHORS

A. Install anchors at proper locations to prevent stresses from exceeding those permitted by ANSI B31, and to prevent transfer of loading and stresses to connected equipment.

B. Fabricate and install anchor by welding steel shapes, plates and bars to piping and to structure. Comply with ANSI B31 and with AWS standards.

C. Where expansion compensators are indicated, install anchors in accordance with expansion unit manufacturer's written instructions, to limit movement of piping and forces to maximum recommended by manufacturer for each unit.

D. Anchor Spacing: Where not otherwise indicated, install anchors at ends of principal pipe-runs, at intermediate points in pipe-runs between expansion loops and bends. Make provisions for preset of anchors as required accommodating both expansion and contraction of piping.

3.5 ADJUSTMENT OF HANGERS AND SUPPORTS

A. Adjust hangers and supports and place grout as required under supports to bring piping to proper levels and elevations.

END OF SECTION 22 05 30

SECTION 22 05 53

IDENTIFICATION FOR PLUMBING PIPING AND EQUIPMENT

PART 1 - GENERAL

1.1 WORK INCLUDED

A. Provide pipe identification for all exposed piping in Equipment Rooms, on pipe mains above accessible ceilings, access panels, and piping exposed to view.

B. Provide valve tags for all valves. Provide valve tag chart, enclosed in a minimum 8-1/2" x 11" frame, in each mechanical room. Master chart(s) to be included in the maintenance manual.

C. Provide equipment nameplates for all major equipment, such as water heaters, pumps, etc… Nameplates shall include all information on standard nameplates, but shall be of an engraved metal or plastic type, mechanically secured to the equipment.

D. Examine other sections of the Project Manual for requirements which affect work of this section whether or not such work is specifically mentioned in this section.

1.2 RELATED DOCUMENTS

A. The Bidding Requirements and Contractual Conditions set forth in Division 01 apply to this section.

1.3 QUALITY ASSURANCE

A. Meet the requirements of:

1. ANSI A13.1-1981: Scheme for the Identification of Piping System.
2. ANSI 253.1: Safety Color Code for Marking Physical Hazards.

PART 2 - PRODUCTS

2.1 MATERIALS

A. Pipe markers shall be "SET MARK" semi-rigid plastic identification markers as manufactured by Seton Name Plate Corporation. Markers shall conform to ANSI A13.1 for correct color background, color of letters and correct marker length. Use Type STR markers on outside diameters 3/4" through 5", and Type STR markers on outside diameters of 6" and larger. Direction of flow arrows shall be included on each marker. Letter height and length of color background shall be as follows:

LENGTH OF OUTSIDE DIAMETER	LETTER HEIGHT	COLOR FIELD
3/4" - 1-1/4"	1/2"	8"
1-1/2" - 2"	3/4"	8"
2-1/2" - 6"	1-1/4"	12"
8" - 10"	2-1/2"	24"
Over 10	3-1/2"	32"

B. For pipes less than 3/4" O.D. a permanently legible tag shall be used.

C. Valve tags shall be 1-1/2" diameter, 19 gauge brass attached with copper meter seal wire, brass chain, or "S" hook. Service designation letter shall be 1/4" high minimum and black filled. Valve numbers shall be 1/2" high and black filled. Stamp tags with service designation and number consecutively for each system - Style 250-BL.

D. Equipment name plates shall be 1½" x 4" aluminum or plastic with black enamel background and with the equipment designation engraved in natural aluminum or white lettering not less than 1/2" high. Equipment name plates shall also include the area that the equipment serves, either by room name or number as approved by the Architect/Engineer.

2.2 MANUFACTURERS

A. Model numbers of Seton Name Plate Corporation, CT are used as standard. Optional manufacturers: W. H. Brady.

2.3 SUBMITTALS

A. Submit manufacturer's product data for tags and identification with colors and wording indicated.

PART 3 - EXECUTION

3.1 PIPE IDENTIFICATION (use colors for services that apply to this project).

TYPE OF SERVICE	BACKGROUND COLOR	LETTER COLOR	SERVICE DESIGNATION

Domestic Cold Wtr.	Green	White	Cold Water
Domestic Hot Wtr.	Green	White	Hot Water
Domestic Hot Wtr. Rtrn.	Green	White	Hot Water Return
Natural Gas	Yellow	Black	Gas
Condensate	Green	White	Condensate

3.2 INSTALLATION

A. Pipe markers:

1. Service designation shall be readable from a standing position from the floor.
2. Provide pipe markers at 25 ft. maximum intervals on mains above ceilings.
3. Provide markers at each major branch from mains and at each branch line.
4. Provide a marker at each equipment connection.

B. Valve tagging:

1. Attach tags to valve handles in such a manner that valve shall be operable without damaging or removing tag.
2. Prepare valve charts showing tag number, locations, sizes, and services. Frame under glass and mount in equipment room. A copy of chart shall be included in the service manual.

C. Equipment nameplates:

1. Nameplate designation shall consist of unit number and area served.
2. Locate nameplates where readable from a standing position on the floor.
3. Secure nameplates securely with rivets or screws.
4. Nameplates identifying manufacturer model number, serial number, voltage, etc. for equipment shall be of the engraved type. Painted labels are not acceptable.

END OF SECTION 22 05 53

SECTION 22 07 00

PLUMBING INSULATION

PART 1 - GENERAL

1.1 RELATED DOCUMENTS

A. Drawings and general provisions of Contract, including General and Supplementary Conditions and Division 22 Specification sections, apply to work of this section.

B. The Bidding Requirements and Contractual Conditions set forth in Division 01 apply to this section.

1.2 DESCRIPTION OF WORK

A. Extent of insulation required by this section is indicated on drawings, and by requirements of this section.

B. Insulation shall be provided by an independent insulating contractor.

C. Types of mechanical insulation specified in this section include the following:

1. Piping System Insulation:
   Domestic Water Piping Systems
   Storm Water Piping Systems
   Condensate Piping Systems
2. Equipment Insulation:
   Bottom of Roof Drain Bodies

1.3 QUALITY ASSURANCE

A. Firms regularly engaged in manufacturer of mechanical insulation products, of types and sizes required, whose products have been in satisfactory use in similar service for not less than 5 years.

B. Subject to compliance with requirements, manufacturers offering products which may be incorporated in the work include, but are not limited to, the following: Armstrong, Certainteed Corp., Johns-Manville Corp., Knauf Fiber Glass, Owens-Corning Fiberglass Corp., Pittsburgh Corning Corp.

C. Installer: A firm with at least 5 years successful installation experience on projects with mechanical insulation similar to that required for this project.

D. Flame/Smoke Ratings: Provide composite mechanical insulation (insulation, jackets, coverings, sealers, mastics and adhesives) with flame-spread rating of 25 or less, and Smoke-developed rating of 50 or less, as tested by ANSI/ASIM E 84 (NFPA 255) method.

E. Appropriate ASTM, ANSI, UL, ASME and NFPA standards shall be met.

1.4 SUBMITTALS

A. Product Data: Submit manufacturer's specifications and installation instructions for each type of mechanical insulation. Submit schedule showing manufacturer's product number, thickness, and furnished accessories for each mechanical system requiring insulation.

1. Certified Tests: With product data submit certified test reports on performances including burning characteristics and thermal insulating valves.

B. Maintenance Data: Submit maintenance data and replacement material lists for each type of mechanical insulation. Include this data in Maintenance Manual.

1.5 DELIVERY, STORAGE, AND HANDLING

A. Deliver insulation, coverings, cements, adhesives, and coatings to site in containers with manufacturer's stamp or label, affixed showing fire hazard ratings of products.

B. Protect insulation against dirt, water, and chemical and mechanical damage. Do not install damaged insulation; remove from project site.

C. Protect cements, adhesives and coatings from freezing.

PART 2 - PRODUCTS

2.1 ARMAFLEX INSULATION

A. ¾” thick closed cell insulation. UV rated in exterior applications.

B. Adhesives, Sealers, and Protective Finishes: As recommended by insulation manufacturer for applications indicated.

2.2 FIBERGLASS INSULATION

A. Rigid Fiberglass Equipment Insulation: FS HH-1-558, Form A, Class as indicated. K = .27 at 75°F.

1. Provide Class 1 (non-load bearing) for temperatures up to and including 400°F (204°C) and where insulation is not subjected to compressive loading.
2. Provide Class 2 (load bearing) for temperatures up and including 400°F (204°C) and where insulation is not subjected to compressive loading.
3. Flexible Fiberglass Equipment Insulation: FS HH-I-558, Form B, Type I, Class as indicated.
4. Provide Class 6 for temperatures up to and including 350°F (177°C).

B. Fiberglass Insulation: Factory applied white vapor barrier jacket.

C. Equipment Insulation Compounds: Provide adhesives, cements, sealers, mastics and protective finishes as recommended by insulation manufacturer for applications indicated.

D. Equipment Insulation Accessories: Provide staples, bands, wire, wire netting, tape corner angles, anchors, stud pins and metal covers as recommended by insulation manufacturer for applications indicated.

PART 3 - EXECUTION

3.1 INSTALLATION OF PIPING INSULATION

A. General: Install insulation products in accordance with manufacturer's written instructions, and in accordance with recognized industry practices to ensure that insulation serves its intended purpose.

B. Install insulation on pipe systems subsequent to testing and acceptance of tests.

C. Install insulation materials with smooth and even surface. Insulate each continuous run of piping with full-length units of insulation, with single cut piece to complete run. Do not use cut pieces or scraps abutting each other.

D. Clean and dry pipe surfaces prior to insulating. Butt insulation joints firmly together to ensure complete and tight fit over surfaces to be covered.

E. Maintain integrity of vapor-barrier jackets on pipe insulation, and protect to prevent puncture or other damage.

F. Cover valves, fittings and similar items in each piping system with equivalent thickness and composition of insulation as applied to adjoining pipe run. Install factory molded, precut or job fabricated units (at Installer's option) except where specific form or type is indicated.

G. Extend piping insulating without interruption through walls, floors and similar piping penetrations, except where otherwise indicated.

H. Install protective metal shields and insulated inserts wherever needed to prevent compression of insulation.

I. Pipe Hanger Insulation Inserts: Butt pipe insulation against pipe hanger insulation inserts. For hot pipes, apply 3" wide vapor barrier tape or band over the butt joints. For cold piping apply wet coat of vapor barrier lap cement on butt joints and seal joints with 3" wide vapor barrier tape or band.

J. Fiberglass cloth jacket may be used in concealed areas.

3.2 PROTECTION AND REPLACEMENT

A. Replace damaged insulation which cannot be repaired satisfactorily, including units with vapor barrier damage and moisture saturated units.

B. Protection: Insulation Installer shall advise Contractor of required protection for insulation work during remainder of construction period, to avoid damage and deterioration.

END OF SECTION 22 07 00

SECTION 22 10 00

INSTALLATION OF PIPING PLUMBING

PART 1 - GENERAL

1.1 RELATED DOCUMENTS

A. The Bidding Requirements and Contractual Conditions set forth in Division 01 apply to this section.

1.2 WORK INCLUDED

A. Install above ground piping as specified below.

PART 2 - PRODUCTS

2.1 UNIONS

A. Unions in copper pipe shall be Bronze 150# ground joint, solder end. Mueller, Chase or Nibco are acceptable alternative manufacturers.

B. Unions in steel pipe shall be Black malleable iron, bronze ground ball joint. Mueller, Chase or Nibco are acceptable alternative manufacturers.

C. Dielectric unions: Capitol, Dart, or Vogt.

2.2 VALVES

A. Drain valves: 3/4" bronze or brass hose and gate, Powell 503 HS where exposed, Powell 502 HS with cap and chain where concealed.

B. Flanged joints of valves: Spirotallic-Condren #913, 304 stainless steel with carbon steel guide, 150# flanges.

2.3 NIPPLES

A. Nipples shall be same weight and material as pipe in which they are installed.

B. Close and shoulder nipples shall be extra heavy.

2.4 EXPANSION LOOPS

A. For piping systems fabricated from pipe and couplings, use one of the following methods for expansion compensation.

   Combination Couplings and Nipples: Provide expansion joints constructed of short pipe nipples and couplings, designed by manufacturer to suit intended service. Provide removable ties to hold joint compressed or expanded during piping fabrication. Select couplings and gasket materials to match balance of piping system.

B. Available Manufacturers: Subject to compliance with requirements, manufacturers offering expansion joints for grooved piping which may be incorporated in the work include, but are not limited to, the following:
   Stockham Valves & Fittings, Inc.
   Vitaulic

PART 3 - EXECUTION

3.1 PIPING INSTALLATION

A. Cut pipe accurately, remove burrs by reaming, and work into place without forcing or springing.

B. Use pipe lubricant on male threads only. Teflon pipe joint tape may be used.

C. Make all changes of direction with fittings, rather than bending.

D. Install piping level, except where specifically required to pitch. Arrange piping to allow draining the entire system.

E. Use eccentric reducers, keeping top of pipe level in water systems.

F. Bull head connections in any piping service are prohibited.

G. All piping shall be installed in a neat and workmanlike manner and parallel to building walls, floors, etc.

H. Properly support all relief valve discharge piping.

I. No pipes shall cross over or within 3-0" of electrical panels.

J. Condensate piping shall be pitched a minimum of 1/8" per foot and cleanouts provided at every 90 degree bend and at convenient intervals in straight lines. A trap shall be provided at each equipment connection to drain. Water seal must exceed maximum pressure developed by the equipment.

3.2 VALVES AND SPECIALTIES

A. Install with hand wheel/lever at or above center line of pipe.

B. Install with union downstream of valve.

C. Install with sweat adapters upstream of valve.

D. Install where accessible.

E. Install the thermometers and gauges to be readable from the floor.

F. Install air vents at all highpoints, piping drops and other points where necessary for air removal.

3.3 ESCUTCHEONS

A. Provide chrome plated escutcheons for exposed piping passing through walls, floors and ceilings or finished areas.

3.4 UNIONS AND FLANGES

A. Flanged joints shall be accessible, faced true and square.

B. Provide unions or flanges at all connections to equipment and fixtures to facilitate removal and servicing.

C. Provide dielectric unions or flanges between dissimilar metals, such as copper to steel.

3.5 COORDINATION

A. Drawings are schematic.

B. Where interferences develop, piping shall be offset or rerouted as required.

C. Where piping is installed in accessible chases, keep all piping to sides of chase, except for portions which must be in the center of the chase. Offset vents to side immediately above connection to waste line.

D. Piping shall be concealed except in unfinished rooms and except as otherwise shown.

3.6 EXPANSION CONTROL

A. Install piping to permit free expansion and contraction without damage to joints and hangers.

B. Provide pipe loops or offsets in supply and return lines where required or necessary for accurate control of movement.

C. Pipe branches from mains must incorporate at least one change of direction in horizontal plane, and one change of direction in vertical plane, before connecting to equipment or fixtures, unless main is anchored at branch take-off.

D. Install flexible connections to vibrating equipment.

E. Provide securely supported pipe anchors and guides where required or necessary to control expansion and contraction of piping.

3.7 EXPANSION LOOPS

A. Fabricate expansion loops as indicated, in locations indicated, and elsewhere as determined by Installer for adequate expansion of installed piping system. Subject loop to cold spring which will absorb 50% of total expansion between hot and cold conditions.

Provide pipe anchors and pipe alignment guides as indicated, and elsewhere as determined by Installer to properly anchor piping in relationship to expansion loops. See drawings for detail of anchors.

B. Install expansion loops where indicated and elsewhere as determined by Installer for adequate expansion of installed piping system. Install in accordance with manufacturer's instructions. Provide pipe anchors alignment guides as indicated, and in accordance with manufacturer's recommendations. Align units properly to avoid end loading and stress.

3.8 EXPANSION JOINTS

A. Install expansion joints where indicated, and elsewhere as determined by Installer for adequate expansion of installed piping system. Install in accordance with manufacturer's instructions. Provide pipe anchors and pipe alignment guides as indicated, and in accordance with manufacturer's recommendations. Align units properly to avoid end loading and stress.

END OF SECTION 22 10 00

SECTION 22 11 00

PIPE, TUBE, AND FITTINGS – PLUMBING

PART 1 - GENERAL

1.1 RELATED DOCUMENTS

A. The bidding requirements and contractual conditions of Division 01 are applicable to this section.

1.2 DESCRIPTION OF WORK

A. Extent of pipe, tube, and fittings required by this section is indicated on drawings and/or specified in other Division 22 sections. Drawings are diagrammatic and do not indicate every bend, fitting, etc. required for installation in the space allotted. Coordinate the work of this section with other work to avoid conflicts.

B. Types of pipe, tube, and fittings specified in this section include the following:

1. Piping Materials:
   Copper tube
   CPVC pipe
   Cast-iron soil pipe
   PVC Pipe
2. Pipe/Tube Fittings:
   Fittings for copper tube
   Fittings for cast-iron soil pipe
   Fittings for PVC Pipe
3. Grooved piping products.
4. Miscellaneous piping materials/products.

1.3 QUALITY ASSURANCE

A. Manufacturers: Firms regularly engaged in the manufacture of pipe, tube, and fittings of types and sizes required, whose products have been in satisfactory use in similar service for not less than 5 years.

B. Brazing: Certify brazing procedures, brazers, and operators in accordance with ANSI B31.5, paragraph 527.5 for shop and job-site brazing of piping work.

C. Appropriate ASTM, ANSI, UL, ASME, and NFPA Standards must be met.

1.4 SUBMITTALS

A. Product Data: Submit catalog cuts, specifications, installation instruction, and dimensional drawings for each type of pipe, tube, and fitting. Submit piping schedule showing manufacturer, pipe or tube weight, fitting type, and joint type for each piping system.

1.5 DELIVERY, STORAGE, AND HANDLING

A. Except for concrete, hub-and-spigot, and similar types of pipe, factory-applied plastic end-caps on each length of pipe and tube shall be provided. Maintain end-caps through shipping, storage and handling as required to prevent pipe end damage and to eliminate dirt and moisture from inside the pipe and tube.

B. Where possible, store pipe and tube inside and protected from the weather. Where necessary to store outside, elevate above ground and enclose with durable, waterproof wrapping.

C. Protect flange and fittings from moisture and dirt by inside storage and enclosure, or by packaging with durable, waterproof wrapping.

PART 2 - PRODUCTS

2.1 PIPING MATERIALS

A. Provide pipe and tube of type, joint type, grade, size and weight (wall thickness or class) indicated for each service. Where type, grade or class is not indicated, provide proper selection as determined by Installer for the installation and comply with governing regulations and industry standards.

B. Copper Tube: ANSI/ASTM B 88; Type (L not buried), Type K (buried), hard-drawn temper, except as otherwise indicated.

1. DWV Copper Tube: ANSI/ASTM B 306.

C. Cast-Iron Soil Pipe:

1. Hubless Cast-Iron Soil Pipe: CISPI 301, ASTM A 888, or ASTM A 74. Pipe and Fittings shall be marked with the collective trademark of the Cast Iron Soil Pipe Institute.
2. Cast-Iron Hub and Spigot Soil Pipe: CISPI 301, ASTM A 888 or ASTM A 74. Pipe and Fittings shall be marked with the collective trademark of the Cast Iron Soil Pipe Institute.

D. PVC Pipe:

1. PVC Pipe Type DWV (Above ground): ASTM D 2665, ASTM D 2949, CSA B181.2,
ASTM F 1488.
2. PVC Pipe Type DWV (Underground): ASTM D 2665, ASTM D 2949, ASTM F 891,
CSA-B181.2.

2.2 PIPE/TUBE FITTINGS

A. Provide factory-fabricated fittings of type, materials, grade, class and pressure rating indicated for each service and pipe size. Provide sizes and types matching pipe, tube, valve or equipment connections in each case. Where not otherwise indicated, comply with governing regulations and industry standards for selections, and with pipe manufacturer's recommendations.

B. Fittings for Copper Tube:

1. Cast-Copper Solder-Joint Fittings: ANSI B16.18.
2. Cast-Copper Solder-Joint Drainage Fittings: ANSI B16.23.
3. Cast-Copper Flared Tube Fittings: ANSI B16.26, Class 150.
4. Non-Ferrous Pipe Flanges: ANSI B16.31, Class 150.
5. Copper-Tube Unions: Provide standard products recommended by manufacturer for use in service indicated.

C. Fittings for Cast-Iron Soil Pipe:

1. Hubless-Cast-Iron Soil Pipe Fittings: CISPI 301; and complying with governing regulations as manufactured by Clamp-All, Inc., Alpha or MG, Inc..
2. Cast-Iron Hub-and-Spigot Soil Pipe Fittings: Match soil pipe units; complying with same standards (ANSI/ASTM A 74).
3. Compression Gaskets: CISPI Standard HSN.

D. Fittings for PVC Pipe:

1. PVC Pipe Fittings: ASTM D 3311, ASTM D 2665, ASTM F 1866.

2.3 MISCELLANEOUS PIPING MATERIALS/PRODUCTS

A. Soldering Materials: Provide soldering materials as determined by Installer to comply with the following installation requirements:

1. Tin-Antimony Solder: Water ANSI/ASTM B 32, Grade 95TA.

2. Silver Solder: Medical Gas, Refrigeration, ANSI/ASTM B 32, Grade 96.5TS.

B. Brazing Materials: Provide brazing materials as determined by Installer to comply with Section IX, ASME Boiler and Pressure Vessel Code.

C. Piping Connectors for Dissimilar Non-Pressure Pipe: Elastomeric annular ring insert, or elastomeric flexible coupling secured at each end with stainless steel clamps, sized for exact fit to pipe ends and subject to approval by plumbing code.

D. Available Manufacturers: Subject to compliance with requirements, manufacturers offering piping connectors which may be incorporated in the work include, but are not limited to, the following: Fernco, Inc.

PART 3 - EXECUTION

3.1 INSTALLATION

A. Install pipe, tube and fitting in accordance with recognized industry practices which will achieve permanently leakproof piping systems, capable of performing each indicated service without piping failure. Install each run with minimum joints and couplings, but with adequate and accessible unions for disassembly and maintenance/replacement of valves and equipment. Reduce sizes (where indicated) by use of reducing fittings. Align piping accurately at connections, within 1/16" misalignment tolerance. Comply with ANSI B31 Code for pressure piping.

B. Locate piping runs vertically and horizontally (pitched to drain) and avoid diagonal runs wherever possible. Orient horizontal runs parallel with walls and column lines. Locate runs as shown or described by diagrams, details and notations or, if not otherwise indicated, run piping in shortest route which does not obstruct usable space or block access for servicing building and its equipment. Hold piping close to walls, overhead construction, columns and other structural and permanent enclosure elements of buildings; limit clearance to 1/2" where furring is shown for enclosure or concealment of piping, but allow for insulation thickness, if any. Where possible, locate insulated piping for maximum 1.0" clearance outside insulation. Wherever possible in finished and occupied spaces, conceal piping from view, by locating in column enclosures, in hollow wall construction or above suspended ceilings; do not encase horizontal runs in solid partitions, except as indicated.

C. Do not run piping through transformer vaults and other electrical or electronic equipment spaces and enclosures unless unavoidable. Install drip pans under piping that must be run through electrical spaces, verify with Engineer prior to running of pipe.

D. Provide joints of type indicated in each piping system.

1. Braze copper tube and fitting joints in accordance with ANSI B31.

2. Solder copper tube-and-fitting joints where indicated, in accordance with recognized industry practice. Cut tube ends squarely, ream to full inside diameter, and clean outside of tube ends and inside of fittings. Apply solder flux to joint areas of both tubes and fittings. Insert tube full depth into fitting, and solder in manner which will draw solder full depth and circumference of joint. Wipe excess solder from joint before it hardens.
3. Weld pipe joints in accordance with ANSI B31.
4. Weld pipe joints in accordance with recognized industry practices.
5. Weld pipe joints of steel water pipe in accordance with AWWA C206.
6. Hubless Cast-Iron Joints: Comply with CISPI 310.

3.2 CLEANING, FLUSHING AND FILLING

A. Remove strainer, automatic air vents, and flow regulators from all piping systems and ensure all control and shut-off valves are fully open. Flush each system for a minimum of two hours.

B. Replace strainers, air vents, and flow regulators and fill system with clean water.

3.3 PIPING TESTS

A. Test pressure piping in accordance with ANSI B31.

B. Provide temporary equipment for testing, including pump and gauges. Test piping system before insulation is installed. Remove control devices before testing. Test each natural section of each piping system independently but do not use piping system valves to isolate sections where test pressure exceeds valve pressure rating. Fill each section with water and pressurize for indicated pressure and time.

C. Required test period is 24 hours with no pressure drop.

D. Test each piping system at 150% of operating pressure indicated, but not less than125 PSI test pressure.

E. Observe each test section for leakage at end of test period. Test fails if leakage is observed or if pressure drop exceeds 5% of test pressure.

F. Repair piping systems sections which fail required piping test, by disassembly and re-installation, using new materials to extent required to overcome leakage. Do not use chemicals, stop-leak compounds, mastics, or other temporary repair methods.

G. Drain test water from piping systems after testing and repair work has been completed.

END OF SECTION 22 11 00

SECTION 22 11 01

CONDENSATE PIPING SYSTEMS – PLUMBING

PART 1 - GENERAL

1.1 RELATED DOCUMENTS

A. Drawings and general provisions of Contract, including General and Supplementary Conditions and Division 01 Specification sections, apply to work of this section.

1.2 DESCRIPTION OF WORK

A. Extent of condensate piping work is indicated on the drawings and schedules, as indicated in Mechanical General Provisions and by requirements of this section.

B. Applications for condensate piping include the following:

1. Conductor piping from air handling equipment to building storm drain or as indicated on drawings.
2. Refer to appropriate Division 23 sections for exterior condensate system required in conjunction with storm water piping.
3. Refer to appropriate Division 22 sections for insulation required in conjunction with condensate piping; not work of this section.
4. Trenching and backfill required in conjunction with storm water piping is specified in applicable Division 33 sections, and is included as work of this section.

PART 2 - PRODUCTS

2.1 CONDENSATE PIPING MATERIALS AND PRODUCTS

A. Provide piping materials and factory-fabricated piping products of sizes, types, pressure ratings, and capacities as indicated. Where not indicated, provide proper selection as determined by Installer to comply with installation requirements. Provide sizes and types matching piping and equipment connections; provide fittings of materials which match pipe materials used in storm water piping systems.

2.2 BASIC PIPE, TUBE AND FITTINGS

A. Provide pipe, tube and fittings complying with Division 22 Basic Materials and Methods section, "Pipe, Tube and Fittings", in accordance with the following listing:

B. Above Ground Drain Piping:

1. Pipe Size 1-1/4" and Larger: DWV copper hard drawn.
2. Fittings: DWV copper with 50/50 silver soldered joints.
3. Pipe Size 1" and Smaller: Type "L" copper, hard drawn.
4. Fittings: Wrought copper with 95/5 soldered joints.

C. Underground Drain Piping:

1. Pipe Size 6" and Smaller: Polyvinyl chloride pipe (PVC) DWV-ASTM D2665-82.
2. Pipe Class: Schedule 40
3. Fittings: PVC-DWV fittings with solvent weld cement ASTM D2564-80.

2.3 BASIC SUPPORTS, ANCHORS AND SEALS

A. Provide supports, anchors and seals complying with Division 22 Basic Materials and Methods section, "Supports, Anchors and Seals", in accordance with the following listing:

B. Adjustable steel clevises, steel pipe clamps and pipe saddle supports for horizontal piping hangers and supports.

C. Two-bolt riser clamps for vertical piping supports.

D. Concrete inserts, C-clamps, and steel brackets for building attachments.

E. Copper flashings for piping penetrations.

2.4 DRAINAGE PIPING PRODUCTS

A. Provide factory fabricated drainage piping products of size and type indicated. Where not indicated, provide proper selection as determined by Installer to comply with installation requirements and governing regulations.

B. Cleanout Plugs: Cast-bronze or brass, threads complying with ANSI B2.1 countersunk head.

C. Floor Cleanouts: Cast-iron body and frame: cleanout plug; adjustable round top as follows:

Nickel-Bronze Top: Manufacturer's standard cast unit of pattern indicated.

D. Available Manufacturers: Subject to compliance with requirements, manufacturers offering piping products which may be incorporated in the work include the following: Ancon, Inc., Josam Manufacturing Co., J.R. Smith Manufacturing Co., Wade Div., Tyler Pipe, Zurn.

PART 3 - EXECUTION

3.1 INSTALLATION OF BUILDING DRAIN PIPING

A. Install condensate building drains as indicated and in accordance with the latest version of the Florida Building Code. Lay building drains beginning at low point of systems, true to grades and alignment indicated with unbroken continuity of invert. Clear the interior of piping from dirt and other superfluous material. Place plugs in ends of uncompleted piping at end of day or whenever work stops.

B. Install condensate piping pitched to drain at minimum slope of 1/4" per foot (2%) for piping 3" and smaller, and 1/8" per foot (1%) for piping 4" and larger.

3.2 EQUIPMENT CONNECTIONS

A. Provide union and P-trap with cleanout and union connection to equipment. Refer to details on drawings.

B. Provide condensate piping as required and make connection to all Owner furnished/Contractor installed equipment.

3.3 INSTALLATION OF DRAINAGE PIPING PRODUCTS

A. Cleanouts: Install in condensate piping as indicated, as required by the Florida Building Code; at each change in direction of piping greater than 45o; at minimum intervals of 50' for piping 4" and smaller and 100' for larger piping; and at base of each conductor. Install floor and wall cleanout covers for concealed piping. Select type to match adjacent building finish.

B. Flashing Flanges: Install flashing flange and clamping device with each cleanout passing through water proof membrane.

3.4 PIPING TESTS

A. Test condensate piping system in accordance with requirements of the Florida Building Code.

END OF SECTION 22 11 01

SECTION 22 11 16

DOMESTIC WATER PIPING

PART 1 - GENERAL

1.1 RELATED DOCUMENTS

A. The Bidding Requirements and Contractual Conditions set forth in Division 01 apply to this section.

1.2 DESCRIPTION OF WORK

A. Extent of domestic water piping systems is indicated on drawings and schedules and by requirements of this section.

B. Applications for domestic water piping systems include the following:

1. Domestic cold water piping
2. Domestic hot water piping

1.3 QUALITY ASSURANCE

A. Manufacturers: Firms regularly engaged in the manufacture of domestic water piping systems products, of types, materials, and sizes required, whose products have been in satisfactory use in similar service for not less than 5 years.

B. ANSI Standards: Comply with applicable American National Standards pertaining to products and installation of domestic water piping systems.

1.4 SUBMITTALS

A. Submit manufacturer's data for domestic water piping systems, materials and products.

PART 2 - PRODUCTS

2.1 DOMESTIC WATER PIPING MATERIALS AND PRODUCTS

A. Provide piping materials and factory-fabricated piping products of sizes, types, pressure ratings, temperature ratings, and capacities as indicated. Provide sizes and types matching piping and equipment connections provide fittings of materials which match pipe materials used in domestic water piping systems.

2.2 BASIC PIPE, TUBE, AND FITTINGS

A. Provide pipe, tube, and fittings complying with Division 22 Basic Materials and Methods section "Pipe, Tube, and Fittings", in accordance with the following listing:

2.3 Schedule 40 and 80 CPVC

A. Alternate Water System: Corzan® CPVC Schedule 40 and 80 Pressure Pipe and Fitting System

B. CPVC is intended for pressure applications where the operating temperature will not exceed 200°F.

C. Pipe and fittings shall be manufactured from virgin rigid CPVC (chlorinated polyvinyl chloride) vinyl compounds with a Cell Class of 23447-B as identified in ASTM D 1784. CPVC Schedule 40 and 80 pipe shall be Iron Pipe Size (IPS) conforming to ASTM F 441. CPVC Schedule 80 fittings shall conform to ASTM F 439. CPVC Schedule 80 threaded fittings shall conform to ASTM F 437. Pipe and fittings shall be manufactured as a system and be the product of one manufacturer. All pipe and fittings shall be manufactured in the United States. Pipe and fittings shall conform to National Sanitation Foundation (NSF) Standard 61 or the health effects portion of NSF Standard 14.

D. Installation shall comply with the latest installation instructions published by Charlotte Pipe and Foundry and shall conform to all local plumbing, building, and fire code requirements. Solvent cement joints shall be made in a two step process with primer manufactured for thermoplastic piping systems and solvent cement conforming to ASTM F 493. The system shall be protected from chemical agents, fire stopping materials, thread sealant, plasticized vinyl products, or other aggressive chemical agents not compatible with CPVC compounds. Systems shall be hydrostatically (water) tested after installation. Testing with compressed air or gas is not recommended.

2.4 SPECIAL PIPING SPECIALTIES

A. Water Hammer Arresters: Provide bellows type water hammer arresters, stainless steel casing and bellows, pressure rated for 250 PSI, tested and certified in accordance with PDI Standard WH-201.

B. Available Manufacturers: Subject to compliance with requirements, manufacturers offering water hammer arresters which may be incorporated in the work include, but are not limited to, the following: Amtrol Inc., Smith (Jay H.) Mfg. Co., Wade Div., Tyler Pipe, Zurn Industries, Inc.

2.5 BASIC SUPPORTS, ANCHORS, AND SEALS

A. Provide supports, anchors, and seals complying with Division 22 Basic materials and Methods section "Supports, Anchors and Seals", in accordance with the following listing:

1. Adjustable steel clevises, adjustable roller hangers, and adjustable pipe roll stands for horizontal piping hangers and supports.
2. Two-bolt riser clamps for vertical piping supports.
3. Concrete inserts, C-clamps, and steel brackets for building attachments.
4. Protection shields for insulated piping support in hangers.

2.6 BASIC VALVES

A. Provide valves complying with Division 22 Basic Materials and Methods section "Valves", in accordance with the following listing:

B. Sectional Valves:

1. 2" or Smaller: Ball or Gate valves.
2. 2-1/2" and Larger: Gate valves.

C. Shutoff Valves:

1. 2" and Smaller: Ball or Gate valves.
2. 2-1/2" and Larger: Gate valves.

D. Drain Valves:

1. 2" and Smaller: Ball or Gate valves.
2. 2-1/2" and Larger: Gate valves.

E. Check Valves:

1. All Sizes: Swing check valves.

2.7 SPECIAL VALVES

A. Special valves required for domestic water piping systems include the following types:

B. Balance Cocks:

1. Threaded Ends 2" and Smaller: Class 125, bronze body, bronze plug, screw driver operated, straight or angle pattern.

2. Soldered Ends 2" and Smaller: Class 125, bronze body, bronze plug, screw driver operated, straight or angle pattern.
3. Available Manufacturers: Subject to compliance with requirements, manufacturers offering balance cocks which may be incorporated in the work include, but are not limited to, the following: Bell & Gossett, Hammond Valve Corp., Illinois Products, American Air Filter Company, Milwaukee Valve Company, Inc., Sarco Company, Taco, Inc.

C. Hose Bibbs: Threaded Ends: Bronze body, renewable composition disc, tee handle, 3/4" NPT inlet, 3/4" hose outlet with vacuum breaker.

D. Available Manufacturers: Subject to compliance with requirements, manufacturers offering hydrants which may be incorporated in the work include, but are not limited to, the following: Ancon, Inc., Smith, (Jay R.) Mfg. Co., Wade Division, Tyler Pipe, Zurn Industries, Inc.

2.8 BACKFLOW PREVENTERS

A. Provide reduced pressure principal backflow preventers consisting of assembly including shutoff valve on inlet and outlet and strainer on inlet. Backflow preventers shall include test cocks, and pressure differential relief valve located between two positive seating check valves. Construct in accordance with ASSE Standard 1013.

B. Available Manufacturers: Subject to compliance with requirements, manufacturers offering backflow preventers which may be incorporated in the work include, but are not limited to, the following: Hersey Products, Inc., Lawler, Watts Regulator Company

2.9 BASIC EXPANSION COMPENSATION

A. Provide expansion compensation products complying with Division 22 Basic Materials and Methods section "Extension Compensation, in accordance with the following listing:

1. Expansion compensators for hot water and hot water recirculating piping.
2. Pipe alignment guides.

PART 3 - EXECUTION

3.1 INSTALLATION OF DOMESTIC WATER DISTRIBUTION PIPING

A. Install water distribution piping in accordance with Division 22 Basic Materials and Methods section "Pipe, Tube, and Fittings".

B. Sterilization solution shall be 400 ppm to 1000 ppm chlorine made from a sanitation grade chlorine or sodium hypochlorite. Solution shall remain in system for twenty-four

(24) hours during which time valves and faucets are to be opened and closed several times. Outlets shall be tested to ensure an adequate amount of chlorine is present. At conclusion of sterilization, entire system shall be flushed with clean water until chlorine content is at a level approved by the Health Department.

3.2 INSTALLATION OF EXTERIOR WATER PIPING

A. Install exterior water service piping system in compliance with local governing regulations.

B. Copper Tube: Install in accordance with recommended procedures of the Copper Development Association.

C. Sterilization solution shall be 400 ppm to 1000 ppm chlorine made from a sanitation grade chlorine or sodium hypochlorite. Solution shall remain in system for twenty-four (24) hours during which time valves and faucets are to be opened and closed several times. Outlets shall be tested to ensure an adequate amount of chlorine is present. At conclusion of sterilization, entire system shall be flushed with clean water until chlorine content is at a level approved by the Health Department.

D. Installation of all underground water lines shall include 14 GA irrigation wire, blue coated, secured to the pipe at 3’-0” on-centers in accordance with the manufacturer’s installation instructions.

3.3 INSTALLATION OF PIPING SPECIALTIES

A. Install piping specialties in accordance with Division 22 Basic Materials and Methods section "Piping Specialties".

B. Water Hammer Arresters: Install in upright position, in locations and of sizes in accordance with PDI Standard WH-201, and elsewhere as indicated.

3.4 INSTALLATION OF VALVES

A. Install valves in accordance with Division 22 Basic Materials and Methods section "Valves".

B. Sectional Valves: Install on each branch and riser, close to main, where branch or riser serves two or more plumbing fixtures or equipment, connections, and elsewhere as indicated.

C. Shutoff Valves: Install on inlet of each plumbing equipment item, and on inlet of each plumbing fixture, and elsewhere as indicated.

D. Drain Valves: Install on each plumbing equipment item located to completely drain equipment for service or repair. Install at base of each riser, at base of each rise or drop in piping system, and elsewhere where indicated or required to completely drain domestic water piping system.

E. Check Valves: Install spring loaded check valves on discharge side of each pump, and swing check valves elsewhere as indicated.

F. Balance Cocks: Install in each hot water recirculating loop, and elsewhere as indicated.

G. Hose Bibbs: Install where indicated with vacuum breaker.

3.5 INSTALLATION OF BACKFLOW PREVENTERS

A. Install backflow preventers where indicated, and where required by the Florida Building Code. Locate in the same room as equipment being protected and pipe relief outlet to the nearest floor drain.

3.6 INSTALLATION OF PRESSURE REGULATING VALVES

A. Install pressure regulating valves where indicated. Provide inlet and outlet shutoff valves, and glove valve bypass. Provide pressure gauge on valve outlet.

3.7 INSTALLATION OF EXPANSION COMPENSATION PRODUCTS

A. Install expansion compensation products in accordance with Division 22 Basic Materials and Methods section "Expansion Compensation".

3.8 EQUIPMENT CONNECTIONS

A. Piping Runouts to Fixtures: Provide hot and cold water piping runouts to fixtures of sizes indicated, but in no case smaller than required by Code.

B. Equipment Connections: Connect hot and cold water piping system to mechanical equipment as indicated, and comply with equipment manufacturer's installation instructions. Provide shutoff valve and union for each connection, provide drain valve on drain connection.

3.9 SPARE PARTS

A. Furnish to Owner, one valve key to each key operated hydrant, bibb, or faucet installed.

END OF SECTION 22 11 16

SECTION 22 13 16

SANITARY WASTE AND VENT PIPING

PART 1 - GENERAL

1.1 RELATED DOCUMENTS

A. The Bidding Requirements and Contractual Conditions set forth in Division 01 apply to this section.

1.2 DESCRIPTION OF WORK

A. Extent of soil and waste piping system work is indicated on drawings and schedules, and by requirements of this section.

B. Applications for soil and waste piping systems include the following:

1. Above ground soil, waste and vent piping within buildings including soil stacks vent stacks, horizontal branches, traps, and connections to fixtures and drains.
2. Underground building drain piping including mains, branches, traps, connections to fixtures and drains, and connections to stacks, terminating at connection to sanitary sewers outside foundation wall. Verify inverts of mains and make final connection.
3. Refer to appropriate Division 22 sections for insulation required in conjunction with soil and waste piping; not work of this section.
4. Provide trenching and backfill required in conjunction with underground building drain piping.

1.3 QUALITY ASSURANCE

A. Manufacturers: Firms regularly engaged in the manufacture of piping, products of types, materials and sizes required, whose products have been in satisfactory use in similar service for not less than 5 years.

B. ANSI Compliance: Comply with applicable American National Standards pertaining to products and installation of soil and waste piping systems.

C. PDI Compliance: Comply with applicable Plumbing and Drainage Institute Standards pertaining to products and installation of soil and waste piping systems.

1.4 SUBMITTALS

A. Product Data: Submit manufacturer's data for soil and waste piping systems materials and products.

PART 2 - PRODUCTS

2.1 SOIL AND WASTE PIPING MATERIALS AND PRODUCTS

A. Provide piping materials and factory-fabricated piping products of sizes, types, pressure ratings, and capacities as indicated. Provide sizes and types matching piping and equipment connections; provide fittings of materials which match pipe materials used in soil and waste piping systems.

2.2 BASIC PIPE, TUBE, AND FITTINGS

A. Provide pipe, tube, and fittings complying with Division 22 Basic Materials and Methods section "Pipe, Tube, and Fittings", in accordance with the following listing:

B. PVC Piping:

1. PVC piping shall be Schedule 40 Solid Wall Pipe and PVC DWV Fitting System.
2. PVC shall be Schedule 40 solid wall pipe and PVC DWV fittings used in sanitary drain, waste, and vent (DWV), sewer, and storm drainage applications. This system is intended for use in non-pressure applications where the operating temperature will not exceed 140°F.
3. Pipe and fittings shall be manufactured from virgin rigid PVC (polyvinyl chloride) vinyl compounds with a Cell Class of 12454-B as identified in ASTM D 1784. PVC Schedule 40 pipe shall be Iron Pipe Size (IPS) conforming to ASTM D 1785 and ASTM D 2665. PVC DWV fittings shall conform to ASTM D 2665. Pipe and fittings shall be manufactured as a system and be the product of one manufacturer. All pipe and fittings shall be manufactured in the United States. Pipe and fittings shall conform to National Sanitation Foundation Standard 14.
4. Installation shall comply with the latest installation instructions published by the manufacturer and shall conform to all local plumbing, building, and fire code requirements. Solvent cement joints shall be made in a two-step process with primer manufactured for thermoplastic piping systems and solvent cement conforming to ASTM D 2564. The system shall be protected from chemical agents, fire stopping materials, thread sealant, plasticized vinyl products, or other aggressive chemical agents not compatible with PVC compounds. Systems shall be hydrostatically tested after installation.

2.3 BASIC SUPPORTS, ANCHORS, AND SEALS

A. Provide supports, anchors, and seals complying with Division 22 Basic Materials and Methods section "Supports, Anchors, and Seals", in accordance with the following listing:

1. Adjustable steel clevises, steel pipe clamps, and pipe saddle supports for horizontal piping hangers and supports.
2. Two-bolt riser clamps for vertical piping supports.
3. Concrete inserts, C-clamps, and steel brackets for building attachments.

2.4 SPECIAL VALVES

A. Special valves required for soil and waste piping systems include the following types:

Backwater Valves: Cast-iron body, bronze backwater valve assembly. Hang flapper in such manner to provide maximum 1/4" clearance between flapper and seat for air circulation. Provide end to suit piping material; bolted cover.

B. Available Manufacturers: Subject to compliance with requirements, manufacturers offering backwater valves which may be incorporated in the work include, but are not limited to, the following: Ancon, Inc., Smith (Jay R.) Mfg. Co., Wade Div., Tyler Pipe, Zurn Industries, Hydromechanics Div.

2.5 SPECIAL EXPANSION COMPENSATION

A. Special expansion compensation products required for soil and waste piping systems include the following types:

Expansion Joints: Cast-iron body, adjustable bronze sleeves, bronze bolts with wing nuts, for vertical installation only.

B. Available Manufacturers: Subject to compliance with manufacturers offering expansion joints which may be incorporated in the work include, but are not limited to the following: Ancon, Inc., Smith (Jay R.) Mfg. Co., Wade Div., Tyler Pipe, Zurn Industries.

2.6 DRAINAGE PIPING PRODUCTS

A. Provide factory fabricated drainage piping products of size and type indicated on the drawings. Where not indicated by schedule on the drawings, provide proper selection as determined by Installer to comply with installation requirements and governing regulations.

1. Cleanout Plugs: Cast-bronze or brass, threads complying with ANSI B2.1 countersunk head.
2. Floor Cleanouts: Cast-iron body and frame; cleanout plug; adjustable round top as follows:
   a. Nickel-Bronze Top; Manufacturer's standard cast unit of pattern indicated.
   b. Pattern: Exposed rim type, with recess to receive 1/8" thick resilient floor finish.
3. Wall Cleanouts: Cast-iron body adaptable to pipe; cast-bronze or brass cleanout plug; stainless steel cover including screws.
4. Flashing Flanges: Cast-iron watertight stack or wall sleeve with membrane flashing ring. Provide underdeck clamp and sleeve length as required.
5. Vent Flashing Sleeves: Cast-iron caulking-type roof coupling for cast-iron stacks, cast-iron threaded type roof coupling for steel stacks, and cast-bronze stack flashing sleeve for copper tubing.

B. Available Manufacturers: Subject to compliance with requirements, manufacturers offering drainage piping products which may be incorporated in the work include, but are not limited to, the following: Ancon, Inc.) Mfg. Co., Smith (Jay R.) Mfg. Co., Wade Div., Tyler Pipe, Zurn Industries

2.7 FLOOR DRAINS

A. Provide floor drains of size as indicated on drawings.

B. Available Manufacturers: Subject to compliance with requirements, manufacturers offering floor drains which may be incorporated in the work include, but are not limited to, the following: Ancon, Inc., Smith (Jay R.) Mfg. Co., Wade Div., Tyler Pipe, Zurn Industries.

PART 3 - EXECUTION

3.1 INSTALLATION OF SOIL AND WASTE ABOVE GROUND PIPING

A. Install soil and waste piping in accordance with Division-15 Basic Materials and Methods section, "Pipe, Tube, and Fittings", and with Code.

B. Soil, waste, and vent drain piping - Plug and fill system to highest point to provide at least ten (10) feet minimum head on all parts of system. Piping shall be watertight for at least one (1) hour under observed testing.

3.2 INSTALLATION OF BUILDING DRAIN PIPING

A. Install building drains as indicated and in accordance with the Florida Building Code. Lay underground building drains beginning at low point of systems, true to grades and alignment indicated with unbroken continuity of invert. When installing building drains below grade, care shall be taken to ensure that the installed system is capable of withstanding anticipated earth loads and live loads to be exerted.

B. Place bell ends of piping facing upstream. Install required gaskets in accordance with manufacturer's recommendations for use of lubricants, cements, and other special installation requirements. Clear the interior of piping of dirt and other superfluous material as work progresses. Maintain swab or drag-in line and pull past each joint as it is completed. Place plugs in ends of uncompleted piping at end of day or whenever work stops.

C. Install soil and vent piping pitched to drain at minimum slope of 1/4" per foot (2%) for piping 2-1/2" and smaller, 1/8" per foot (1%) for piping 3" to 6”, and 1/16” per foot (2%) for piping 8” or larger.

D. Below grade pipe installations shall be performed in accordance with the manufacturer’s installation instructions, the Florida Building Code.

E. Trench excavation, bedding, and backfill procedures shall be in accordance with Chapter IV of the Cast Iron Soil Pipe and Fittings Handbook.

3.3 INSTALLATION OF SPECIAL VALVES

A. Backwater Valves: Install in sanitary building drain piping as indicated, and as required by Code. For interior installation, provide cleanout cover flush to floor centered over backwater valve cover, and of adequate size to remove valve cover for service.

3.4 INSTALLATION OF SPECIAL EXPANSION COMPENSATION PRODUCTS

A. Install expansion joints on vertical risers as indicated, and as required by the Florida Building Code.

3.5 INSTALLATION OF DRAINAGE PIPING PRODUCTS

A. Cleanouts: Install in sanitary above ground piping and sanitary building drain piping as indicated, as required by Code; at each change in direction of piping greater than 45 degrees; at minimum intervals of 50' for piping 4" and smaller and 75' for larger piping; and at base of each vertical soil or waste stack. Install floor and wall cleanout covers for concealed piping, select type to match adjacent building finish.

B. Flashing Flanges: Install flashing flange and clamping device with each stack and cleanout passing through waterproof membrane.

3.6 INSTALLATION OF DRAINS

A. Install drains in accordance with manufacturer's written instructions and in locations indicated.

B. Coordinate with soil and waste piping as necessary to interface drains with drainage piping systems.

C. Install drains at low points of surface areas to be drained, or as indicated. Set tops of drains flush with finished floor.

D. Install drain flashing collar or flange so that no leakage occurs between drain and adjoining flooring. Maintain integrity of waterproof membranes, where penetrated.

E. Position drains so that they are accessible and easy to maintain.

3.7 EQUIPMENT CONNECTIONS

A. Piping Runouts to Fixtures: Provide soil and waste piping runouts to plumbing fixtures and drains, with approved trap, of sizes indicated; but in no case smaller than required by Code.

B. Locate piping runouts as close as possible to bottom of floor slab supporting fixtures or drains.

3.8 PIPING TESTS

A. Test soil and waste piping system in accordance with requirements of the Florida Building Code.

END OF SECTION 22 13 16

SECTION 22 30 00

PLUMBING EQUIPMENT

PART 1 - GENERAL

1.1 RELATED DOCUMENTS

A. The Bidding Requirements and Contractual Conditions set forth in Division 01 apply to this section.

1.2 WORK INCLUDED

A. Extent of plumbing equipment work is indicated on drawings and provisions of this section, including schedules and equipment lists associated with either drawings or this section.

B. Types of plumbing equipment required for project include the following:

1. Domestic water heaters:
Commercial electric water heaters

1.3 QUALITY ASSURANCE

A. Manufacturer: Firms regularly engaged in the manufacture of plumbing equipment of type and sizes required, whose products have been in satisfactory use in similar service for not less than 5 years.

B. UL and NEMA Compliance: Provide electric motors and electrical components required as part of plumbing equipment, which have been listed and labeled by Underwriters Laboratories and comply with NEMA standards.

C. NEC Compliance: Comply with National Electrical Code (ANSI/NFPA 70) as applicable to installation and electrical connections of ancillary electrical components of plumbing equipment.

D. ANSI Compliance: Comply with ANSI Z223.1 (NFPA 54) "National Fuel Gas Code', as applicable to installation of gas-fired water heaters.

E. AGA and NSF Labels: Provide water heaters which have been listed and labeled by American Gas Association and National Sanitation Foundation.

F. USDA Approval: Comply with requirements of United States Department of Agriculture for approved materials and installation practices for protective liners for potable water storage tanks.

G. ASME Code Symbol Stamps: For the following equipment, comply with ASME Boiler and Pressure Vessel Code for construction, and stamp with ASTM Code Symbol:

Commercial water heaters

H. ASME Relief Valve Stamps: Provide water heaters with safety relief valves hearing ASME valve markings.

I. Mineral Standards: Provide mineral products for water softeners, acceptable under state and local public health control regulations.

J. AWWA Compliance: Comply with applicable American Water Works Association standards pertaining to steel water tanks.

K. PDI Compliance: Comply with applicable Plumbing and Drainage Institute standards pertaining to grease interceptors and acid neutralization tanks.

1.4 SUBMITTALS

A. Product Data: Submit manufacturer's plumbing equipment specifications, installation and start-up instructions, and capacity and ratings, with selection points clearly indicated.

B. Shop Drawings: Submit assembly type shop drawings indicating dimensions, weights, required clearances, and methods of assembly of all components.

C. Wiring Diagrams: Submit ladder-type wiring diagrams for all components, clearly indicating all required field electrical connections.

D. Maintenance Data: Submit maintenance data and parts lists for each item of plumbing equipment. Include "trouble-shooting" maintenance guides. Include this data in maintenance manual.

E. Submit certificate indicating USDA approval of potable water storage tank.

PART 2 - PRODUCTS

2.1 DOMESTIC WATER HEATERS

A. Commercial Electric Water Heaters:

1. Provide commercial electric water heaters of size, capacity, and electrical characteristics as indicated on schedule. Comply with ANSI/ASHRAE/IES 90.1 for energy efficiency. Provide UL listing, and NSF approval.
2. Heater: Working pressure of 150 psi, magnesium anode rod; glass lining on internal surfaces exposed to water.
3. Heating Elements: Heavy-duty, medium watt density, with incoloy sheath, thermostat stepped through magnetic contactors.
4. Safety Controls: Double pole, manual reset, high limit; probe-type electric low water cutoff; both factory wired.
5. Jacket: Equip with full size control compartments with front panel opening. Insulate tank with vermin-proof glass fiber insulation. Provide outer steel jacket with bonderized undercoat and baked enamel finish.
6. Warranty: Furnish 3 year limited warranty for tank leakage.
7. Accessories: Provide brass drain valve; 3/4" temperature and pressure relief valve; ASME tank construction for 125 psi working pressure; and 4" x 6" handhole cleanout.
8. Controls: Adjustable immersion thermostat; power circuit fusing; pilot light and switch controlling control circuit; 3-stage time delay sequencer; and 7-day time clock.
9. Available Manufacturers: Subject to compliance with requirements, manufacturers offering commercial electric water heaters products which may be incorporated in the work include, but are not limited to, the following: A. O. Smith, Rheem Water Heater Div., Ruud Water Heater Div., State Industries, Viking Superior Corp.

PART 3 - EXECUTION

3.1 INSTALLATION OF DOMESTIC WATER HEATERS

A. Electric Water Heaters:

1. Install electric water heaters as indicated, in accordance with manufacturer's installation instructions, and in compliance with applicable codes.
2. Support: Set units on concrete pads, orient so controls and devices needing service and maintenance have adequate access. Level and plumb unit.
3. Electrical Supply: Furnish wiring diagram to Electrical Installer. Refer to Division 16000 for wiring of units.
4. Piping: Connect hot and cold water piping to units with shutoff valves and unions. Connect recirculating water line to unit with shutoff valve, check valve, and union.
5. Start-Up: Start-up, test, and adjust electric water heaters in accordance with manufacturer's start-up instructions. Check and calibrate controls.

END OF SECTION 22 30 00

SECTION 22 40 00

PLUMBING FIXTURES

PART 1 - GENERAL

1.1 RELATED DOCUMENTS

A. All work of this section shall be governed by all provisions of the general, supplementary and special conditions of these specifications and the drawings.

B. Examine other sections of the Project Manual for requirements which affect work of this section whether or not such work is specifically mentioned in this section.

1.2 SCOPE

A. All plumbing fixtures shall be of “First Quality” as defined and set forth in Commercial Standard CS77-28 as promulgated by the US Department of Commerce. All fixtures are to be white vitreous china unless otherwise specifically noted. Where enameled iron fixtures are specified, they shall be furnished with acid resisting enamel.

B. Fixtures and fittings proposed shall be from one manufacturer and of similar character in any room or location. Escutcheons, handles, etc., on the different fixtures shall be of the same design.

C. The fixture numbers and types are scheduled on the drawings and are used to indicate type and quality of fixtures desired.

D. All fixtures and fittings proposed shall be submitted for approval with cuts and full description.

PART 2 - PRODUCTS

2.1 PLUMBING FIXTURES

A. Provide factory-fabricated fixtures of type, style and material indicated. For each type fixture, provide fixture manufacturer's standard trim, carrier, seats and valves as indicated by their published product information, either as designed and constructed or as recommended by the manufacturer, and as required for a complete installation. Where more than one type is indicated, selection is Installer's option; but, all fixtures of same type must be furnished by single manufacturer.

2.2 MATERIALS

A. Unless otherwise specified, comply with applicable Federal Specification WW-P-541/-Series sections pertaining to plumbing fixtures, fittings, trim, metals and finishes. Comply with requirements of WW-P-541/-specification relative to quality of ware, glazing enamel, composition and finish of metals, air gaps and vacuum breakers, even though some plumbing fixtures specified in this section are not described in WW-P-451/-Series.

1. Provide materials which have been selected for their surface flatness and smoothness. Exposed surfaces which exhibit pitting, seam marks, roller marks, foundry sand holes, stains, discoloration, or other surface imperfections on finished units are not acceptable.
2. Where fittings, trim and accessories are exposed or semi-exposed, provide bright chrome-plated or polished stainless steel units. Provide copper or brass where not exposed.

B. Stainless Steel Sheets: ANSI/ASTM A 167, Type 302/304, hardest workable temper.

Finish: No. 4, bright, directional polish on exposed surfaces.

C. Galvanized Steel Sheet: ANSI/ASTM A 526, except ANSI/ASTM A 527, for extensive forming; ANSI/ASTM A 252, G90 zinc coating, chemical treatment.

D. Aluminum: ANSI/ASTM B 209/B 221 sheet, plate and extrusions, as indicated; alloy, temper and finish as determined by manufacturer, except 0.40 mil natural anodized finish on exposed work unless another finish is indicated.

E. Vitreous China: High quality, free from fire cracks, spots, blisters, pinholes and specks; glaze exposed surfaces and test for crazing resistance in accordance with ANSI/ASTM C 554.

2.3 PLUMBING FITTINGS, TRIM AND ACCESSORIES

A. Water Outlets: At locations where water is supplied (by manual, automatic or remote control), provide commercial quality faucets, valves, or dispensing devices, of type and size indicated and as required to operate as indicated. Include manual shutoff valves and connecting stem pipes to permit outlet servicing without shutdown of water supply piping systems.

B. Vacuum Breakers: Provide with flush valves and locations where water outlets are equipped for hose attachment.

C. P-Traps: Include adjustable and removable P-traps with cleanouts where drains are indicated for direct connection to drainage system.

D. Carriers: Provide carriers indicated, or, if not indicated, provide rectangular floor mounted cast-iron supports for fixtures of either graphitic gray iron, ductile iron, or malleable iron as required.

E. Fixture Bolt Caps: Provide manufacturer's standard exposed fixture bolt caps finished to match fixture finish.

F. Escutcheons: Where fixture supplies and drains penetrate walls in exposed locations, provide chrome-plated, cast-brass escutcheons with set screw.

G. All faucets, stops and fittings must each be of one manufacturer with interchangeable parts, unless otherwise specified. All units are to be manufactured from brass and monel metal and be of institutional quality.

H. Comply with additional fixture requirements contained in fixture schedule included at the end of section.

2.4 MANUFACTURERS

A. Available Manufacturers: Subject to compliance with requirements, manufacturers offering plumbing fixtures and trim which may be incorporated in the work include the following:

Plumbing Fixtures: American Standard, Briggs, Crane, Eljer, Kohler.

Plumbing Trim: American Standard, Delta, Elkay, Moen, Just Company, Kohler Co., T & S Brass.

Flush Valves: Zurn Aqua Flush, Delaney, Sloan.

Fixture Seats: Bemis, Beneke, Church, Olsonite, Sperzel.

Water Coolers: Ebco (Oasis), Elkay, Halsey Taylor, Haws, Sunroc.

Mop Basins: Creative Industries, Fiat Products, Mustee, Stern-Williams.

Stainless Steel Sinks: Elkay Manufacturing Co., Just Manufacturing Co.

Shower Fittings Sets: American Standard, Delta, Elkay, Moen, Just, Kohler, T & S Brass.

Fixture Carriers: Jonespec, Josam, J.R. Smith, Zurn Industries, Wade.

Traps and Supplies: Brasscraft, Engineered Brass Company, Eljer Plumbingware, McGuire.

PART 3 - EXECUTION

3.1 INSTALLATION

A. Layout fixtures and indicated on the drawings.

B. Carefully install fixtures in accordance with manufacturer's data with sufficient clearances to coordinate with accessories, specialties and equipment specified in other divisions of these specifications and/or as shown on the drawings.

C. Hangers and carriers shall be installed in accordance with manufacturer's recommendations and in accordance with good practice and workmanship.

D. Clean all exposed metal surfaces from grease, dirt, paint or other foreign material.

E. Fixtures shall be properly protected from damage during construction and shall be cleaned in accordance with manufacturer's instruction under this section of the specification.

F. Fixtures, chrome-plated piping, fittings and trim shall be polished before requesting acceptance of the system.

END OF SECTION 22 40 00

SECTION 23 00 00

HEATING, VENTILATING, AND AIR CONDITIONING (HVAC)

PART 1 - GENERAL

1.1 RELATED DOCUMENTS

A. The Bidding Requirements and Contractual Conditions set forth in Division 01 apply to this section.

B. Examine other sections of the Project Manual for requirements which affect work of this section whether or not such work is specifically mentioned in this section.

C. Bidders of work in Sections under Division 23 are expected to have read these requirements and, upon subcontracting work called for in such Sections, shall be responsible for compliance with such Sections.

1.2 REQUIREMENTS OF REGULATORY AGENCIES

A. All work under Division 23 shall comply with the codes and standards as listed on the project drawings.

1.3 DEFINITIONS

A. Technical Definitions:

1. "Piping" shall mean pipe, fittings, flanges, valves, controls, hangers, traps, drains, insulation, vents and items customarily required in connection with the transfer of fluids.
2. "Concealed" shall mean embedded in masonry or other construction, installed within or behind wall furring, within double partitions or hung ceilings, in attics, in crawl spaces, in chases, in shafts, buried in trenches, etc.
3. "Exposed" shall mean not concealed.
4. "Demolition" shall be the removal of any existing equipment, and the capping or plugging or any existing services to that equipment. Adjacent surfaces shall be restored to existing conditions and adjacent surfaces.
5. "Furnish" means to purchase and deliver products and equipment to the project site and prepare for installation.
6. "Install" means to assemble, erect, place, anchor and connect furnished products into satisfactory operation.
7. "Provide" means to furnish and install.
8. “Contract Documents” shall include the written Project Manual and the Drawings.
9. Divisions 21, 22 and 23 are the new CSI divisions replacing the old Division 15 nomenclature. They shall be hereby defined as interchangeable.

10. Division 26 is the new CSI division replacing the old Division 16 nomenclature. They shall be hereby defined as interchangeable.

1.4 QUALITY ASSURANCE

A. Standards: Certain standard materials and installation requirements are described by reference to standard specifications. These standards include the following:

ASTM - American Society for Testing Materials
ASME - American Society of Mechanical Engineers
NFPA - National Fire Protection Association
NEMA - National Electrical Manufacturers Association
UL - Underwriters Laboratories
EPA – Environmental Protection Agency
ANSI - American National Standards Institute
ASHRAE - American Society of Heating, Refrigerating and Air Conditioning Engineers
SMACNA - Sheet Metal and Air Conditioning Contractors' National Association
AMCA - Air Moving and Conditioning Association
ARI - Air Conditioning and Refrigeration Institute
AMA - Acoustical Materials Association
NEC - National Electric Code
ISO – International Organization for Standardization

B. Whenever a reference is made to a standard, installation or materials the intention is such shall comply with the latest published edition at the time project is bid, unless the edition is otherwise specified herein.

C. Materials and equipment herein shall be new and standard catalogued items manufactured by reputable concerns regularly supplying such materials. Material shall bear the Underwriters Laboratories, Inc. label or other appropriate label where such is required or allowed by code, by Contract Documents or by authorities having jurisdiction (AHJ).

D. Product deliveries shall be arranged in accordance with construction schedules and to avoid conflict with work and site conditions.

1. Deliver and store products in undamaged condition, in manufacturer's original containers or packaging, with identifying labels intact and legible.
2. Immediately, on delivery, inspect shipments to assure compliance with the requirements of the Contract Documents and approved submittals, and that products are properly protected and undamaged.
3. Provide equipment and personnel to handle products by methods to prevent soiling or damage to products or packaging.

1.5 AMPLIFICATION

A. Except where modified by a specific notation to the contrary, it shall be understood that the indication and/or description of an item, in the Contract Documents, carries with it the intent to provide the item, regardless of whether or not this is explicitly stated as part of the indication or description.

B. The intent of the Contract Documents is to include all items necessary for the proper execution and completion of the work. The Contract Documents are complementary, and what is required by any one shall be as binding as if required by all. Work not covered in the Contract Documents will not be required unless it is consistent therewith and is reasonably inferable as being necessary to produce the intended results. Words and abbreviations which have well-known technical or trade meanings are used in the Contract Documents in accordance with such recognized meanings.

C. In case of discrepancy concerning quality and/or quantity within the Contract Documents, the better quality and/or the greater quantity shall be provided, at no increase to the contract sum.

D. No exclusions from, or limitations in, the language used in the Contract Documents shall be interpreted as meaning that the appurtenances or accessories necessary to complete any required system or item of equipment are to be omitted.

E. The Drawings, of necessity, utilize symbols and schematic diagrams to indicate various items of work. The work shall be installed, in accordance with the diagrammatic intent expressed on the drawings, and in conformity with the dimensions indicated on the architectural and structural drawings.

F. Where Contract Documents conflict, such conflict shall be brought to the attention of the Architect for clarification. In general, the Architectural Drawings shall take precedence over the HVAC Drawings with regard to building construction. Any change from the Drawings necessary to make the work conform to the building as constructed, to fit the work of other trades or to the rules of authorities having jurisdiction, shall be made at no expense to the Owner.

G. No interpretation shall be made from the limitations of symbols and diagrams that any elements necessary for complete Work are excluded.

H. Certain details appear on the Drawings, which are specific with regard to the dimensioning and positioning of the Work. These details are intended only for the purpose of establishing general feasibility. They do not obviate responsibility for field coordination for the indicated Work.

I. Capacities, sizes and conditions specified or shown are allowable minimums. Based on design and rated operating conditions of systems, motors shall not be overloaded.

Equipment shall not operate at speeds or temperatures greater than manufacturer's published recommendations, and no strain or demand shall be imposed upon any component to any system, structure or building.

J. The Architect reserves the right to make minor changes in the location of HVAC work or equipment prior to "roughing-in" without additional cost to the contract. Architect approval for deviations from drawing locations and layout shall be obtained prior to installation.

K. The use of a word in the singular shall not be considered as limiting where other indications denote that more than one item is required.

L. In the event that extra work is authorized, work shown on Drawings depicting such work, and/or described by Addendum, Architectural Supplemental Instruction, or by Change Order, shall be subject to the basic requirements set forth in Division One and Contract Documents in all respects.

1.6 QUALIFICATIONS

A. All entities and personnel performing work for this project shall be regularly engaged and experienced in the type of work to be furnished and shall be licensed for such specialty trades, employ only properly qualified foremen, journeymen and apprentices as appropriate and in keeping with best trade practices.

B. Each firm shall provide, upon request, a list of similar jobs it has completed.

1.7 CONSTRUCTION REQUIREMENTS

A. Locations of all pipes, ducts, panels, appliances, etc., as shown on the Drawings are approximate only and are understood to be subject to such revisions as may prove necessary or desirable at the time the work is installed. All work shall be installed with relation to building conditions and shall be installed correct with reference to finished elevations, etc. Exterior utilities shown on the drawings are diagrammatic only. Their exact locations, depths and invert elevations shall be as required for proper flow and coordination with other trades.

B. If equipment, piping and ductwork, are installed requiring space conditions other than those shown, or arranged, and rearrangement of the space is necessitated, the Architect shall review the change before proceeding with the work. The request for such changes shall be accomplished by submission of Shop Drawings of the space in question.

C. The Contractor is responsible for the proper location and size of all slots, holes or openings in the building structure pertaining, and for the correct location of pipe sleeves.

D. The Contractor shall so coordinate the work so that it may be installed in the most direct and workmanlike manner. Piping interferences shall be handled by giving precedence to pipe lines, which require a stated slope for proper operation. Sewer lines and condensate piping shall take precedence over water lines in determination of elevations. Where there is interference between sewer lines and condensate lines, the sewer lines shall have precedence and provisions shall be made in the condensate lines for looping them around the sewer lines. In all cases, lines requiring a stated grade for their proper operation shall have precedence over electrical work and ductwork.

E. All piping and ductwork in finished areas, except where noted to the contrary, shall be installed in chases, furred spaces, above ceilings, etc. In all cases, pipes and ducts shall be installed as high as possible. Runs of piping shall be grouped whenever feasible.

F. All oiling devices and all parts of equipment requiring adjustments shall be easily accessible. Provide access doors and panels if required for proper maintenance of all equipment and devices requiring service.

1.8 PROJECT CONDITIONS

A. All existing utilities shall be located prior to the beginning of work. Any conflicts shall be resolved and noted on the Record Documents.

B. Adequate means of protection for all utilities shall be provided and, if utilities are damaged during working operations, such shall be repaired to the satisfaction of the Owner, at no cost to the contract.

1.9 COORDINATION

A. Coordinate the layout of mechanical work with other trades. Locations of structural systems, plumbing, and HVAC work should take preference over the location of conduit runs.

1.10 AIR CONDITIONING SYSTEM OPERATION

A. The operation of air conditioning equipment during construction is prohibited unless the following procedures are strictly followed:

1. Contractor shall notify the Owner in writing of his intent to use the equipment to dehumidify the building and/or to control air borne contaminants.
2. For each piece of equipment used, a record log shall be maintained which indicates starting date and every day operation. Log shall indicate all service and maintenance work completed on the equipment.

3. A minimum MERV 8 filters shall be in place in all return air intakes and the filter section of all air handling units. Record of filter change shall be maintained at each filter location.
4. Upon completion of the work, and prior to the Substantial Completion, the interior of air handling units shall be vacuum cleaned. Coils and drain pans shall be washed.
5. Test and Balance Agency shall measure and record temperature and humidity throughout the facility. Report to be available at Substantial Completion Inspection.
6. Failure to keep and present required records will mandate that all air moving equipment and ducts be opened and cleaned in the presence of the Owner. The Contractor will be responsible for the cost of the personnel assigned by the Owner, Architect and Engineer to witness the cleaning process.

PART 2 - PRODUCTS

NOT APPLICABLE

PART 3 - EXECUTION

3.1 ORGANIZATION OF THE WORK:

A. All work shall be installed as required to meet all construction schedules.

B. Prior to starting the work, carefully verify all measurements at the site and determine that the work will properly clear openings, structural members and other work. Correlate the time of each work item with all other items to the best advantage of the completed job. Furnish, in ample time to avoid delays in the work, all information required to revise footing elevations, structural elements, chases and openings in floors and walls, and to provide clearances which may be required to accommodate the work. Set all sleeves, anchor bolts and inserts required to accommodate equipment before concrete is poured or masonry work is started.

C. Should uncharted or incorrectly charted piping, ductwork or other utilities be encountered during work operations, notify the Architect immediately for clarification. Cooperate with utility companies to maintain active utilities in operation.

D. Immediately act to put any damaged utilities back in functioning conditions.

E. Installation and equipment shop drawings shall be initialed and dated upon installation. This procedure will enable the Architect to verify the work in progress.

F. The Contractor shall be responsible for the work until its completion and formal final Substantial Completion. Replace any work which may be damaged, lost or stolen without additional cost to the Owner.

G. Provide all scaffolding, rigging, hoisting, and services necessary for erection of the work and for delivery to and removal from the premises of any equipment and apparatus furnished. Remove same from premises when no longer required.

H. Minimize construction noise levels in all locations adjacent to or in occupied areas. The Owner reserves that right to prevent use of any tools which cause detrimental vibration or noise when the facility is occupied.

I. Protect equipment and materials during construction from damage from water, dirt, welding and cutting splatter, paint drippings, etc., by use of shields and drop cloths. Damaged equipment or materials shall be repaired (or replaced) to the Architect's satisfaction.

J. Provide the following accessory materials for mechanical systems.

1. Anchor bolts or other anchoring devices shall be of the size and type recommended by equipment manufacturer for specific application.
2. Structural support (steel) for elevated or suspended mechanical items shall be made with connections using "simple" framing.
3. Resilient isolation pads for motors and equipment shall be rubber-in-shear pads and of type recommended by manufacturers of the motor and equipment. All air handlers and cooling equipment shall be provided with isolation pads between the equipment and the concrete housekeeping pad.
4. Dielectric fittings shall be provided between dissimilar metals such as copper piping joins steel or iron piping, insulating bushings or unions.
5. Escutcheons shall be provided where pipes pierce partitions, floors, walls or ceilings. Escutcheons shall be chrome plated.
6. All pipe and duct penetrations of rated floors and walls shall be properly sealed in accordance with UL approved details. Coordinate penetrations with the appropriate detail or reference on the Contract Drawings.
7. Provide a secondary drain pan under all condensate producing equipment. Drain pan shall include a float switch wired to shut down the air handler and cooling once tripped.

K. Delay caused by equipment not being on the job site when required shall be avoided in the following manner:

Provide temporary substitute equipment (subject to approval of the project Architect), allowing the building to become operative. The temporary substitute equipment shall later be removed and replaced with that originally specified or approved when it arrives, all at the convenience of and at no additional cost to the Owner.

L. All products with compressor sections shall be started by a factory trained service technician. Provide written report indicating start-up results. Provide extended

compressor parts warranty for all compressors for a total five year warranty on all compressors. Provide manufacturer's phase loss protection.

3.2 SHOP DRAWINGS AND SUBMITTALS

A. The Architect shall have the authority to determine the method of submitting shop drawings whether in multiple sets or by the reproducible transparency technique.

B. Submittals are required for all items of mechanical equipment and products.

C. For items reviewed and marked "Rejected" or "Revise and Resubmit", only one additional submittal will be reviewed to verify product compliance with the Contract Documents. Should further submittals be required for the Design Professional to verify the submittal with the requirements of the Contract Documents, the hourly rate of $ 150.00 will be billed to the Contractor for the Professional(s) time spent on the review.

D. Submittals shall be referenced to the Contract Documents. For all equipment, which has been scheduled directly on the Drawings, provide within the submittal, a performance schedule for the proposed equipment in the same format as included on the Contract Documents.

E. Manufacturer's catalog cuts may be submitted for all standard cataloged equipment, provided that the item required to meet the project specification is not modified in any way from the standard catalog version. Where multiple products are included on the same cut sheet, clearly identify the product proposed for installation by striking through all sections not applicable to the proposed product. Do not provide useless or unnecessary pages in the submittal package.

F. Cut sheets shall be clearly marked to indicate the exact size, type, rating, capacity, etc., of the item to be provided.

G. Bind shop drawings/catalog-cuts in three ring binders with a title sheet and identification on front and side of the binder. Allow space for Contractor, Project Architect and Engineer review stamps. Index all items to the Project Manual or Drawings as applicable.

H. All submittals must bear the handwritten signature of the Contractor and his stamp of approval before being considered for review by the Architect.

I. Full electrical characteristics for each device requiring power shall be prominently displayed on the shop drawings or submittal. Additionally, a statement signed by maker of the submittal shall be included indicating that he or she has carefully examined the electrical characteristics specified in the Contract Documents (and if remodeling or an addition, as to existing electrical characteristics), and that the motors, equipment or devices proposed to be furnished are fully compatible.

A similar statement shall be included stating the supplier has reviewed the space requirements of the project and that the submitted equipment will fit in the space provided and the manufacturer's required service requirements have been met.

J. Shop drawings that deviate from the requirements of the contract documents shall list all differences in a cover letter attached to top of the submittal.

3.3 COORDINATION DRAWINGS

A. Prior to the installation and fabrication of HVAC systems, submit detailed, overlaid coordination drawings at a minimum 1/4" = 1'-0" scale. Drawings are to include, but not necessarily be limited to, the following items:

1. Detailed sheet metal drawings indicating all ductwork, volume dampers, access doors, smoke/fire dampers, grilles, registers and diffusers, air handling equipment, penetrations through roofs, floors, etc. Include elevation, and appropriate section, of all air handling systems.

B. Coordinate with other trades for installation without conflict.

3.4 EXAMINATION OF EXISTING CONDITIONS

A. Visit and carefully examine those portions of the site and/or present buildings affected by this work so as to become familiar with existing conditions and difficulties that will affect the execution of the work, before submitting proposals.

B. Submission of a proposal will be construed as evidence that such examination has been made. Later claims for labor, equipment, materials, etc. required because of difficulties encountered, which could have been foreseen had such examination been made, will not be recognized.

3.5 ACCESS DOORS AND PANELS

A. Furnish access doors and panels for proper and adequate access to all dampers, smoke detectors, and other mechanical equipment which is concealed in walls, furring and hung ceilings, or where may additionally be necessary.

B. Material and Finish: Access doors shall conform to the finish of adjacent construction as indicated in the finish schedule.

3.6 ELECTRICAL CONNECTIONS

A. Provide all electrical work and connections except those specifically set forth below as being provided under Division 26 work.

1. The Electrical Subcontractor shall provide under Division 26 all wiring except the following which will be provided under Division 23:
   a. Temperature Control Wiring.
   b. Equipment Control Wiring.
   c. Interlock Wiring.
   d. 120V power for energy management controllers. Power for controllers shall be provided by the sub-contractor providing the controls and shall be installed by licensed electricians.
2. The Electrical Subcontractor shall provide all power wiring complete from power source to motor or equipment junction box, including power wiring through starters and shall connect to power lugs on the equipment.
3. The Electrical Subcontractor shall provide all motor starters and contactors except when specified to be furnished by the equipment manufacturer under Division 23.
4. Conduits:
   a. When Conduit is required for control wiring, the Electrical Subcontractor shall provide under Division 26. Conduit shall be provided for all control work installed within mechanical spaces (exposed) and in walls.
5. Motors:
   a. Motors shall be furnished by the manufacturer or supplier of the specified equipment. All motors shall be of the premium efficiency type.
   b. General purpose motors shall be open drip-proof conforming to NEMA Design B, Class B insulation, continuous 40°C ambient, 60 Hz, 1.15 service factor, and 1800 RPM maximum speed unless specified otherwise. All motors smaller than 3/4 HP shall be self-lubricating.
   c. Motors shall be protected with thermal overload devices in the motor, or by the motor starter.
   d. Motors which are required to operate in conjunction with variable frequency drives shall be specifically rated for such application.
   e. Single phase motors 1/2 HP and smaller shall have built-in overload protection; over 1/2 HP shall have motor starters as overload protection.
   f. Single Phase motors shall be capacitor start, capacitor run.
   g. Equipment requiring 1,000 Watts or more shall have a power factor of 85% or greater at rated load conditions. Equipment with power factor less than 85% shall be corrected to at least 90% under full load operating conditions. Power factor corrective devices shall be switched with related equipment.
   h. Motor characteristics which change from that specified, due to the Contractor electing to use one of the optional manufacturers, or an updated model, etc., shall be coordinated with the Electrical Contractor prior to bid. This Contractor is responsible for the cost of any revisions

necessary to provide proper power and control connections in full accordance with the National Electric Code.

B. Air conditioning equipment containing various electrical components within its housing shall be furnished with internal wiring arranged to terminate at one set of electrical power lugs. Components shall be approved for group operation as defined by National Electrical Code, or auxiliary equipment must be provided as required to satisfy the National Electrical Code and UL Labels (or other labels) of the unit.

C. All three phase compressorized units (i.e. condensing units, etc.) shall be provided with the manufacturer's standard phase loss protection option.

3.7 PAINTING

A. All work shall be left clean and free from oil, dirt and grease prior to field painting.

B. Upon completion, thoroughly clean all equipment, ductwork, piping and other work to remove all dirt, grease, rust and oil. Thoroughly prepare all such work for painting.

C. Equipment:

1. All equipment shall have factory standard finish.
2. Factory finished equipment which has rusted or been damaged shall be repaired, cleaned, spot primed and entirely repainted the original color.
3. Insulation coverings shall be cleaned, sized (if necessary), and painted for service identification.

D. Ferrous metals which are not exposed to view within the building, such as piping, pipe hangers, angle supports, supports for apparatus, black iron partitions or casings, tanks, etc., shall be painted with one coat of priming zinc chromate.

E. Ferrous metals which are exposed to view or to the weather, such as pipes, pipe supports, supporting or stiffening angles for exhaust elbows, exhaust heads, air conditioning units, etc., shall be painted in accordance with the Painting Section of the Project Manual.

F. Paint inside of all ductwork where visible through register or through diffuser or grille faces with one coat of dull black.

3.8 PENETRATION OF WATERPROOFING (INCLUDING WATERPROOF CONCRETE)

A. Where any work pierces waterproofing, including waterproof concrete, the method of installation shall be approved by the Architect before the work is completed.

B. Provide all necessary sleeves, sealant and flashing materials required to make openings absolutely water tight.

3.9 PENETRATIONS

A. The penetration of any sound proofing materials shall include all necessary materials and labor to provide thorough and complete caulking of all penetrations through walls, partitions and decks, whether such penetration occurs above or below dropped ceiling lines.

B. Penetrations of special materials (such as face brick, plaster, dry wall, precast concrete, etc.) shall be done by the trades doing such original work.

C. Penetrations shall be cut or patched by such skilled mechanics in a manner that the hole is uniformly 1/8 inch clear all around the item penetrating it (including insulation) so that a full penetration (but not excessive) sealant bead can be installed.

D. Sealing work shall be completed in compliance with the requirements of the Caulking and Sealants Section of the Project Manual.

E. Any pipe, duct, conduit or other item penetrating a wall, partition or deck which tends to vibrate, shall have sufficient corrective methods affected to one or both sides of the penetration that no vibration occurs at point of penetration.

3.10 EXCAVATION AND BACKFILL

A. Trench and pit excavating and backfilling inside and outside the building, as required, including shoring and bracing, pumping and protection for safety of persons and property shall be provided as required.

B. Backfill shall be compacted in layers not exceeding six inches (6") in depth. Completed backfill shall conform to surrounding ground and finish grade and with compaction requirements of the Project Manual.

1. Concrete encasement: Piping passing under footings, foundations and other locations as shown on drawings shall be encased by eight inches (8") minimum concrete on all sides. Concrete shall conform to Division Three requirements.
2. Extend concrete encasement eight (8") inches around piping and twelve (12) each side of footings or foundations.

C. Remove non-usable excavated material from the site. Do not remove usable material from site.

D. Provide and operate pumping equipment to keep excavations free of water.

E. Repair and restore paving, streets, curbs, walks, and other work in the area where excavations are made.

F. Provide additional excavation and backfill where required to resolve conflicts in buried lines.

G. Hold trench width to a minimum.

H. Do not excavate utility trenches parallel to building footings closer than four feet (4') from the footings except by approval of the Architect. When parallel trenches require cuts deeper than the building footings, the horizontal distance from the footing shall be equal to, or greater than one and one half (1-1/2) times the vertical distance below the footing, but in no case shall the horizontal distance be less than four (4') feet except by the approval of the Architect.

I. Mechanical excavation shall be held to four inches (4") above final grade of the bottom of trench. The remainder shall be shaped by manual excavation, so that piping is fully supported on undisturbed soil. Shoring of piping in trench will not be allowed.

J. Whenever, in the opinion of the Architect, the soil is unsuitable for supporting piping and appurtenances, provisions for proper foundations shall be made at no additional cost to the contract. Soil test reports are bound in the Project Manual.

K. Wherever trenching or excavating, assume utilities may exist in area without such being shown on the drawings. Exercise extreme caution. Should existing facilities be damaged, repair such to Architect's satisfaction at no additional cost to the contract.

3.11 UNDERGROUND PIPING PROTECTION

A. Protect the exterior surface of all underground steel piping against rust and corrosion. For piping not specified elsewhere to be furnished with factory applied pipe corrosion resistant wrapping, the piping surfaces shall be cleaned of rust, dirt, etc. with a wire brush and shall be free of oil and grease and completely dry. Brush on or otherwise apply as recommended by the manufacturer, a heavy full coating of TC Mastic (Tape Coat Company, Evanston, Illinois) or Reilly Protective Coast Tar Enamel No. 3302 (Reilly Tar and Chemical Company, Indianapolis, Indiana). Dry coating shall be not less than twelve mils thickness. Protect freshly covered surfaces and delay applying insulation (if required) and delay covering with earth for at least 12 hours as recommended by the manufacturers, and depending on the weather. Cathodic protection shall be provided for all buried ferrous piping.

3.12 CHASING, CUTTING AND PATCHING

A. Provide and place required sleeves, forms and inserts before walls, ceilings, partitions, floors or roofs are built.

B. When it becomes necessary to cut finished materials, submit to the Architect for approval, drawings showing the work required and obtain approval before doing such cutting.

C. Provide exact dimensions and locations of these openings (to suit the apparatus to be used) before such walls are built.

D. No cutting or altering the work of others will be permitted without the approval of the Architect. No structural members shall be cut without the previous written approval of the Architect.

E. Any holes in existing slabs or other concrete or finished work required for the installation of new piping shall be core bored and sealed.

F. Finish patch cut areas with floor tile, drywall, plaster, ceiling panels or tiles as required to match the existing surface. Paint entire disturbed painted area to match the existing. Provide new ceiling panels and grid, which may have damaged during construction.

3.13 SLEEVES

A. Sleeves up through 8" diameter shall be Schedule 40 steel pipe and machine cut.

B. Sleeves, 10" diameter and larger, shall be fabricated from 12 gauge steel sheet.

C. Watertight seals: "Linkseal" by Thunderline Corporation.

D. Sleeves shall provide 1/2" minimum clearance all around passing pipe or pipe insulation. Insulation shall be continuous through sleeves.

E. Fill space around ducts and pipes in sleeves in exposed areas and through fire walls and partitions with non-flammable sealing compound equal to Dow Corning Silicone RTV Foam.

F. Close off all spaces around rectangular ducts through walls with sheet metal collars.

G. Sleeves through walls shall be cut flush with each surface.

H. Install sleeves plumb and true to line, grade and position.

I. Pipe sleeves penetrating outside walls shall be packed with insulating material, sealed and made waterproof.

3.14 LUBRICATION AND PACKING

A. Equipment shall be lubricated, using manufacturer's recommended lubricants, with correct type and quantity of lubricant before placing into service.

B. Packing glands shall be examined for proper packing.

C. When filling systems initially for hydrostatic pressure tests, adjust valve packing glands to finger tight, and allow packing to absorb water for 5 minutes prior to tightening packing nuts.

3.15 QUIET OPERATION AND VIBRATION

A. All equipment shall operate (under all conditions of load) free of noise and vibration. Sound and vibration conditions considered objectionable by the Architect shall be corrected by whatever additional work is required in an approved manner at no cost to the Contract.

B. Vibration control shall be by means of approved vibration eliminators (or suppressors) in a manner as recommended by the manufacturer of the eliminators and as required by the manufacturer of the equipment. Submit shop drawings for review by the Architect.

3.16 CLEANING

A. Upon completion, ductwork, piping and equipment shall be thoroughly cleaned of dirt, grease, rust and oil, primed where necessary, and made ready for painting. Vacuum clean the inside and outside of fan plenums, air handling units and equipment cabinets. Vacuum clean coils and comb out damaged fins.

B. Clean galvanized piping and ductwork in exposed areas with diluted acetic acid.

C. Clean copper piping in exposed areas with emery cloth and solvent.

D. Clean gauges, thermometers, traps, strainers and fittings.

3.17 TEST AND INSTRUCTIONS

A. Make tests necessary to establish the adequacy, quality, safety, completed status and satisfactory operation of all systems and components. Tests shall be made to the satisfaction of the Architect and as required by code. Provide instruments and labor necessary to conduct these tests and have them verified by the Architect.

B. Provide a letter addressed to the Owner advising that the completed systems have been installed in accordance with the Contract Documents and that such are in proper operating condition. The Owner shall receive a written guarantee covering all defects in workmanship and material for a period of one (1) year from date of Substantial Completion. Unless otherwise stated, provide extended compressor parts warranty, for a total five year warranty, for all compressors.

3.18 INSTRUCTIONS

A. After the systems are in operation, and tests are complete, instruct the designated personnel of the Owner on the operation and maintenance of all equipment and systems. Entire session shall be video and audio recorded, with copy provided to the Owner and Architect.

B. Provide a minimum of eighty (80) hours total instruction. Instructions shall include the following:

1. Location of equipment and explanation of function.
2. Review of operating instruction manual for record and clarity.
3. Explanation of specific maintenance requirements to be performed by the Owner.
4. Complete review of the equipment's Sequence of Operation and critical schedules and setpoints.

C. Certify in writing that the designated personnel of the Owner (indicated above) were fully instructed in the care, operation and maintenance of all mechanical equipment. This certification shall be signed by all persons attending acknowledging they attended the full instructional program.

3.19 ENGINEER'S PROJECT SITE VISITS

A. When the engineer or his designated representative visits the site to review the installation, all tools, ladders, up to date Contract Documents, etc. necessary for the review of the work shall be provided.

B. The Engineer will provide a typed list of deficiencies noted during the site visit for corrective action. Prior to request for supplementary visits, provide an initialed and dated copy of the last report indicating the current status of the noted deficiency corrections.

3.20 PROJECT CLOSEOUT

A. Prior to request for substantial completion, all HVAC systems shall be verified for proper operation and control. Substantiation of complete and operational systems shall be verified by submission of the following documents and forms:

1. Completed Test and Balance Report. Reports submitted with comments or punch lists will be rejected and substantial completion inspection rescheduled at the Contractor's expense.
2. A letter signed by a corporate officer of the Temperature Controls Installer certifying that the control system operation has been verified through a point-to-point inspection and that the system is calibrated and operates as intended.
3. Completed Operation and Maintenance Manuals. Manuals shall be prepared in accordance with the latest edition of ASHRAE Guideline 4, Preparation of Operating and Maintenance Documentation for Building Systems.

END OF SECTION 23 00 00

REQUEST FOR PRIOR APPROVAL

NOTE TO CONTRACTOR: This letter must be sent to the Architect, with copy to the engineer as per Prior Approval Requirements of the Project Manual (Seven or Ten days as applicable).

[DATE:]

[ARCHITECT NAME]

Re: [PROJECT NAME]
[ARCHITECT/OTHER] Project No.: _____

Dear _____:

We hereby request approval to bid the following products for this project:

REFER TO PROJECT MANUAL:

Section _____, Paragraph _____: We request that _____ be added as an acceptable manufacturer.

Section _____, Paragraph _____: We request that _____ be added as an acceptable manufacturer.

Section _____, Paragraph _____: We request that _____ be added as an acceptable manufacturer.

We understand that listing of the above manufacturers is for bidding purposes only. The Manufacturer is responsible to meet all capacity, controllability of equipment, space requirements, and service clearances as per basis of design.

[CLOSING SIGNATURE]

SECTION 23 05 13

ELECTRICAL COORDINATION

PART 1 - GENERAL

1.1 RELATED DOCUMENTS

A. The Bidding Requirements and Contractual Conditions set forth in Division 01 apply to this section.

B. Examine other sections of the Project Manual for requirements which affect work of this section whether or not such work is specifically mentioned in this section.

1.2 RELATED WORK

A. Electrical work required:

1. All power wiring and conduit. (Provided under Division 26).
2. Control wiring. (Provided under Division 23).
3. Motor disconnects. (Provided under Division 26).
4. Starters furnished and installed under Division 26, except when furnished with packaged equipment; wiring under Division 26.
5. Conduit and control wiring for Division 23 work.

1.3 QUALITY ASSURANCE

A. All electrical work shall conform to the National Electrical Code 2008 (NFPA 70).

B. Electrical equipment shall conform to NEMA standards and shall be UL listed.

1.4 SUBMITTALS

A. Furnish to Electrical Contractor equipment shop drawings that indicate all required power connections.

B. Prepare complete terminal-to-terminal wiring diagrams that show terminal designation on control items and equipment. Diagrams may be part of temperature control submittals.

C. Provide letter on mechanical subcontractor's letterhead certifying that coordination has taken place with the electrical subcontractor and all electrical requirements for mechanical equipment have been met. Additionally, mechanical submittals shall be provided to the electrical subcontractor.

PART 2 - PRODUCTS

2.1 MOTORS

A. All motors shall be premium efficiency.

B. General purpose motors shall be open drip-proof conforming to NEMA Design, Class B insulation, continuous 40° C ambient, 60 Hz, 1.15 service factor, and 1800 RPM maximum speed unless specified otherwise. Voltage and phase shall be as specified.

C. Motors shall be single phase below 3/4 HP and three phase 3/4 HP and larger, unless specified otherwise.

1. Single phase motors shall have built in overload protection.
2. Single phase motors shall be capacitor start, capacitor run.

2.2 EQUIPMENT POWER FACTOR

A. Equipment requiring 1000 watts or more shall have a factor of 85% or greater at rated load conditions. Equipment with power factor less than 85% shall be corrected to at least 90% under full load operating conditions. Power factor corrective devices shall be switched with related equipment.

PART 3 - EXECUTION

3.1 CONTROL WIRING INSTALLATION

A. Control wiring in walls and exposed in Mechanical Rooms and spaces shall be run in thin wall conduit.

3.2 ADDITIONAL REQUIREMENTS

A. Motor characteristics which change from that specified, due to the Contractor electing to use one of the optional manufacturers, or an updated model, etc., shall be coordinated with the Electrical Contractor. All modifications required to the electrical or mechanical designs as a result of the change shall be included at no additional cost to the Owner.

END OF SECTION 23 05 13

SECTION 23 05 30

SUPPORTS, ANCHORS, AND SEALS

PART 1 - GENERAL

1.1 WORK INVOLVED

A. Extent of supports, anchors, and seals required by this section is indicated on drawings and/or specified in other Division 23 sections.

B. Types of supports, anchors, and seals specified in this section include the following:

1. Horizontal piping hangers and supports
2. Vertical piping clamps
3. Hanger rod attachments
4. Building attachments
5. Saddles and shields
6. Flashing materials
7. Miscellaneous materials
8. Anchors

C. Supports, anchors and seals furnished as part of factory-fabricated equipment are specified as part of the equipment assembly in other Division 23 sections.

1.2 QUALITY ASSURANCE

A. Manufacturers: Firms regularly engaged in the manufacture of supports, anchors and seals of types and sizes required, whose products have been in satisfactory use in similar service for not less than 5 years.

B. MSS Standard Compliance:

1. Provide pipe hangers and supports of which materials, design and manufacture comply with ANSI/MSS SP-58.
2. Select and apply pipe hangers and supports, complying with MSS SP-69. Size hangers and supports to support pipe weight and fluid conveyed.
3. Fabricate and install pipe hangers and supports, complying with MSS SP-89.
4. Terminology used in this section is defined in MSS SP-90.

1.3 SUBMITTALS

A. Product Data: Submit catalog cuts, specifications, installation instructions and dimensioned drawings for each type of support, anchor and seal. Include a schedule of supports, anchors and seals to be used.

PART 2 – PRODUCTS

2.1 HORIZONTAL PIPING HANGERS AND SUPPORTS

A. Except as otherwise indicated, provide factory-fabricated horizontal piping hangers and supports complying with ANSI/MSS SP-58, of one of the following MSS types listed, selected by installer to suit horizontal piping system, in accordance with MSS SP-69 and manufacturer's published product information. Use only one type by one manufacturer for each piping service. Select size of hangers and supports to exactly fit pipe size for bare piping, and to exactly fit around piping insulation with saddle or shield for insulated piping. Provide copper-plated hangers and supports for copper piping systems.

Adjustable Steel Clevises: MSS Type 1.
Pipe Hangers: MSS Type 2.
Steel Double Bolt Pipe Clamps: MSS Type 3.
Steel Pipe Clamps: MSS Type 4.
Pipe Hangers: MSS Type 5.
Adjustable Swivel Pipe Rings: MSS Type 6.
Adjustable Swivel Rings, Band Type: MSS Type 10.
Split Pipe Rings: MSS Type 11.
Extension Split Pipe Clamps: MSS Type 12.
U-Bolt: MSS Type 24.
Clips: MSS Type 26.
Pipe Saddle Supports: MSS Type 36, including steel pipe base support and cast-iron floor flange.
Pipe Stanchion Saddles: MSS Type 37, including steel pipe base support and cast-iron floor flange.
Adjustable Pipe Saddle Supports: MSS Type 38 including steel pipe base support and cast-iron floor flange.
Single Pipe Rolls: MSS Type 41.
Adjustable Roller Hangers: MSS Type 43.
Pipe Roll Stands: MSS Type 44.
Pipe Rolls and Plates: MSS Type 45.

Adjustable Pipe Roll Stands: MSS Type 46.

2.2 PIPE HANGERS

A. Pipe hangers for all piping shall be Fee and Mason or Grinnell of a type suitable for each use. Perforated straps shall not be used in any work. For ferrous pipes up to and including four inches (4") in size, use Fee and Mason Fig. 199 malleable iron, adjustable, split ring, swivel hanger. HVAC piping larger than four inches (4"), but not larger than twelve inches (12") shall be Fee and Mason Fig. 170. Where several pipes are parallel at the same elevation, trapeze hangers may be used. Where trapeze hangers are used, the pipes shall be supported on rollers where rollers are called for by the above specifications. For copper pipes up to and including three inches (3") in size, use Fee and Mason Fig. 360 malleable iron, copper plated hangers. For copper pipes larger than three inches (3") use Fee and Mason Fig. 364 copper plated clevis hanger.

B. Hanger rods sizes shall conform to the following schedule:

Pipe up to and including 2": 3/8" rods
Pipe 2-1/2", 3" and 3-1/2": 1/2" rods
Pipe 4" and 5": 5/8" rods
Pipe 6": 3/4" rods
Pipe 8" and 10": 7/8" rods
Pipe 12" and larger: 1" rods

C. Unless shown otherwise, all horizontal runs of ferrous piping shall be suspended from the floor or roof construction, as the case may be, by means of hangers with the following maximum spacing:

Pipe up to and including 1-1/4": 6 feet
Pipe 1-1/2" and 2": 9 feet
Pipe 2-1/2" and 3": 11 feet
Pipe 3-1/2" and 4": 12 feet
Pipe 6": 12 feet
Pipe 8" and larger: 12 feet

D. Unless shown otherwise, all horizontal runs of copper tubing shall be suspended from the floor or roof construction as the case may be, by means of hangers with the following maximum spacing:

Pipe up to 3/4" in size: 5 feet
Pipe 1" and 1-1/4": 8 feet
Pipe 1-1/2" and larger: 10 feet

E. There shall be a hanger within two feet (2') of each elbow or tee. Additional supports shall be provided for valves, strainers, etc. Vertical risers shall be supported by

approved riser clamps at each floor. Vertical pipes within a space shall not have less than two (2) supports.

F. Supports and hangers shall be installed to permit free expansion and contraction in the piping systems. Hangers shall permit vertical adjustment to maintain proper pitch. Where necessary to control expansion and contraction, the piping shall be guided and firmly anchored. No piping shall be self-supporting; nor shall it be supported from equipment connections.

G. Inserts shall be used where piping or equipment is to be hung from concrete construction. Inserts shall be Grinnell Fig. 281, wedge type, concrete inserts. All inserts shall be galvanized to prevent rusting. After the forms are removed, clip off all nails flush with the exposed surface of the inserts.

H. Expansion bolts shall be Ackerman-Johnson.

I. Beam clamps suitable for use with the type of steel construction involved shall be Grinnell.

J. Chilled and hot water piping hangers shall be sized to go around the insulation with saddles being provided to protect the insulation and so the insulation can be continuous through the hanger.

2.3 VERTICAL PIPING CLAMPS

A. Except as otherwise indicated, provide factory-fabricated vertical piping clamps complying with ANSI/MSS SP-58, of one of the following types listed, selected by installer to suit vertical piping systems, in accordance with MSS SP-69 and manufacturer's published product information. Select size of vertical piping clamps to exactly fit pipe size of bare pipe. Provide copper-plated clamps for copper piping systems.

Two-Bolt Riser Clamps: MSS Type 8.
Four-Bolt Riser Clamps: MSS Type 42.

2.4 HANGER ROD ATTACHMENTS

A. Except as otherwise indicated, provide factory-fabricated hanger-rod attachments complying with ANSI/MSS SP-58, of one of the following MSS types listed, selected by installer to suit horizontal piping hangers and building attachments, in accordance with MSS SP-69 and manufacturer's published product information. Use only one type by one manufacturer for each piping service. Select size of hanger rod attachments to suit hanger rods. Provide copper-plated hanger rod attachments for copper piping systems.

Steel Clevises: MSS Type 14.

Swivel Turnbuckles: MSS Type 15.
Malleable Iron Sockets: MSS Type 16.
Steel Weldless Eye Nuts: MSS Type 17.

2.5 BUILDING ATTACHMENTS

A. Except as otherwise indicated, provide factory-fabricated building attachments complying with ANSI/MSS SP-58, of one of the following MSS types listed, selected by Installer to suit building substrate conditions, in accordance with MSS SP-69 and manufacturer's published product information. Select size of building attachments to suit hanger rods.

Concrete Inserts: MSS Type 18
Top Beam C-Clamps: MSS Type 19
Side Beam or Channel Clamps: MSS Type 20.
Center Beam Clamps: MSS Type 21.
Welded Attachments: MSS Type 22.
C-Clamps: MSS Type 23.
Top I-Beam Clamps: MSS Type 25.
Side I-Beam Camps: MSS Type 27.
Steel I-Beam Clamps with Eye Nut: MSS Type 28.
Steel WF-Beam Clamps with Eye Nut: MSS Type 29.
Malleable Beam Clamps: MSS Type 30.
Steel Brackets – Heavy Duty: MSS Type 33
Side Beam Brackets: MSS Type 34.
Plate Lugs: MSS Type 57.
Horizontal Travelers: MSS Type 58.

2.6 SADDLES AND SHIELDS

A. Except as otherwise indicated provide saddles or shields for piping hangers and supports, factory-fabricated, for all insulated piping. Size saddles and shields for exact fit to mate with pipe insulation.

B. Protection Saddles: MSS Type 39; fill interior voids with segments of insulation matching adjoining insulation.

C. Protection Shields: MSS Type 40; of length recommended by manufacturer to prevent crushing of insulation.

D. Thermal Hanger Shields: Constructed of 360 degrees of high density, 100 psi, waterproofed calcium silicate, encased in 360 degrees sheet metal shield. Provide assembly of same thickness as adjoining insulation.

2.7 MANUFACTURERS OF HANGERS AND SUPPORTS

A. Available Manufacturers: Subject to compliance with requirements, manufacturer's offering hangers and supports which may be incorporated in the work include, but are not limited to, the following:

C & S Mfg. Corp.
Elcen Metal Products Co.
Fee & Mason Mfg. Co.
Grinnel Corp.

2.8 MISCELLANEOUS MATERIALS

A. Metal Framing: Provide products complying with NEMA STD ML 1.

B. Steel Plates, Shapes and Bars: Provide products complying with ANSI/ASTM A 36.

C. Cement Grout: Portland cement (ANSI/ASTM C 150, Type I or Type III) and clean uniformly graded, natural sand (ANSI/ASTM C 404, Size No. 2). Mix at a ratio of 1.0 part cement to 3.0 parts sand, by volume, with minimum amount of water required for placement and hydration.

D. Heavy-Duty Steel Trapezes: Fabricate from steel shapes selected for loads required; weld steel in accordance with AWS standards.

E. Pipe Guides: Provide factory-fabricated guides, of cast semi-steel or heavy fabricated steel, consisting of a bolted two-section outer cylinder and base with a two-section guiding spider bolted tight to pipe. Size guide and spider to clear pipe and insulation (if any) and cylinder. Provide guides of length recommended by manufacturer to allow indicated travel.

PART 3 - EXECUTION

3.1 PREPARATION

A. Proceed with installation of hangers, supports and anchors only after required building structural work has been completed in areas where the work is to be installed. Correct inadequacies including (but not limited to) proper placement of inserts, anchors and other building structural
attachments as may be required.

3.2 INSTALLATION OF BUILDING ATTACHMENTS

A. Install building attachments at required locations, within concrete or on structural steel for proper piping support. Space attachments within maximum piping span length indicated in MSS SP-69. Install additional building attachments where support is required for additional concentrated loads, including valves, flanges, guides, strainers, expansion joints, and at changes in direction of piping. Install concrete inserts before concrete is placed; fasten insert securely to forms. Where concrete with compressive strength less than 2500 psi is indicated, install reinforcing bars through openings at top of inserts.

3.3 INSTALLATION OF HANGERS AND SUPPORTS

A. Install hangers, supports, clamps and attachments to support piping properly from building structure; comply with MSS SP-69. Arrange for grouping of parallel runs of horizontal piping to be supported together on trapeze type hangers where possible. Install supports with maximum spacing complying with MSS SP-69. Where piping of various sizes is to be supported together by trapeze hangers, space hangers for smallest pipe size or install intermediate supports for smaller diameter pipe. Do not use wire or perforated metal to support piping, and do not support piping from other piping, ductwork or other supported mechanical or electrical items.

B. Supports and hangers shall be installed to permit free expansion and contraction in the piping systems. Hangers shall permit vertical adjustment to maintain proper pitch. Where necessary to control expansion and contraction, the piping shall be guided and firmly anchored. No piping shall be self-supporting; nor shall it be supported from equipment connections.

C. Install hangers and supports complete with necessary inserts, bolts, rods, nuts, washers and other accessories. Except as otherwise indicated for exposed continuous pipe runs, install hangers and supports of same type and style as installed for adjacent similar piping. Provide section drawing for hanger locations to avoid duct interference.

D. Prevent electrolysis in support of copper tubing by use of hangers and support which are copper-plated, or by other recognized industry methods.

E. Provisions for Movement:

1. Install hangers and supports to allow controlled movement of piping systems and to permit freedom of movement between pipe anchors, and to facilitate action of expansion joints, expansion loops, expansion bends and similar units.
2. Load Distribution: Install hangers and supports so that piping live and dead loading and stresses from movement will not be transmitted to connected equipment.
3. Pipe Slopes: Install hangers and supports to provide indicated pipe slopes, and so that maximum pipe deflections allowed by ANSI B31 are not exceeded.
4. Insulated Piping – comply with the following installation requirements:

a. Clamps: Attach clamps, including spacers (if any), to piping with clamps projecting through insulation; do not exceed pipe stresses allowed by ANSI B31.

b. Shields: Where low compressive strength insulation or vapor barriers are indicated on cold or chilled water piping, install coated protective shields.

c. Saddles: Where insulation without vapor barrier is indicated, install protection saddles.

3.4 INSTALLATION OF ANCHORS

A. Install anchors at proper locations to prevent stresses from exceeding those permitted by ANSI B31, and to prevent transfer of loading and stresses to connected equipment.

B. Fabricate and install anchor by welding steel shapes, plates and bars to piping and to structure. Comply with ANSI B31 and with AWS standards.

C. Where expansion compensators are indicated, install anchors in accordance with expansion unit manufacturer's written instructions, to limit movement of piping and forces to maximum recommended by manufacturer for each unit.

D. Anchor Spacings: Where not otherwise indicated, install anchors at ends of principal pipe-runs, at intermediate points in pipe-runs between expansion loops and bends. Make provisions for preset of anchors as required to accommodate both expansion and contraction of piping.

3.5 ADJUSTMENT OF HANGERS AND SUPPORTS

A. Adjust hangers and supports and place grout as required under supports to bring piping to proper levels and elevations.

END OF SECTION 23 05 30

SECTION 23 05 53

IDENTIFICATION FOR HVAC PIPING AND EQUIPMENT

PART 1 - GENERAL

1.1 WORK INCLUDED

A. Provide pipe identification for all exposed piping in Mechanical Equipment Rooms, on pipe mains above accessible ceilings, access panels, and piping exposed to view.

B. Provide equipment nameplates for all major mechanical equipment, such as air handling units, fans, condensing units, disconnects, starters, etc. Nameplates shall include all information on manufacturers' standard nameplates, but shall be of an engraved metal type, secured to the equipment.

C. Provide a framed, under glass, typed sequence of operation and system diagram for each system, located on the wall of the Mechanical Room.

D. Examine other sections of the Project Manual for requirements which affect work of this section whether or not such work is specifically mentioned in this section.

1.2 RELATED DOCUMENTS

A. The Bidding Requirements and Contractual Conditions set forth in Division 01 apply to this section.

1.3 QUALITY ASSURANCE

A. Meet the requirements of:

1. ANSI/ASME (American Society of Testing and Materials) A13.1 2007, Scheme for Identification of Piping Systems.
2. ANSI 253.1: Safety Color Code for Marking Physical Hazards.

PART 2 - PRODUCTS

2.1 MATERIALS

A. Pipe markers shall be "SET MARK" semi-rigid plastic identification markers as manufactured by Seton Name Plate Corporation. Markers shall conform to ANSI A13.1 for correct color background, color of letters and correct marker length. Direction of flow

arrows shall be included on each marker. Pipe markers located outdoors shall be UV-resistant and labeled for such use. Letter height and length of color background shall be as follows:

OUTSIDE DIAMETER	LETTER HEIGHT	LENGTH OF COLOR FIELD
3/4" - 1-1/4"	1/2"	8"
1-1/2" - 2"	3/4"	8"
2-1/2" - 6"	1-1/4"	12"
8" - 10"	2-1/2"	24"
Over 10	3-1/2"	32"

B. Equipment name plates shall be 1½" x 4" aluminum with black enamel background and with the equipment designation engraved in natural aluminum lettering not less than 1/2" high. Equipment name plates shall also include the area that the equipment serves, either by room name or number as approved by the Architect. Name plates located outdoors shall be UV-resistant and labeled for outdoor use.

2.2 MANUFACTURERS

A. Acceptable Manufacturers: Seton, W. H. Brady.

PART 3 - EXECUTION

3.1 PIPE IDENTIFICATION (use colors for services that apply to this project).

TYPE OF SERVICE	BACKGROUND COLOR	LETTER COLOR	SERVICE DESIGNATION
Refrigerant Piping	Yellow	Black	Refrigerant
Condensate	Green	White	Condensate

3.2 INSTALLATION

A. Pipe markers:

1. Service designation shall be readable from a standing position from the floor.
2. Provide pipe markers at 25 ft. maximum intervals on mains above ceilings.
3. Provide markers at each major branch from mains and at each branch line.
4. Provide a marker at each equipment connection.

B. Equipment nameplates:

1. Nameplate designation shall consist of unit number and area served.

2. Locate nameplates where readable from a standing position on the floor.
3. Secure nameplates securely with rivets or screws.
4. Nameplates identifying manufacturer model number, serial number, voltage, etc. for equipment shall be of the engraved type. Painted labels are not acceptable.

END OF SECTION 23 05 53

SECTION 23 05 93
TESTING, ADJUSTING, AND BALANCING

PART 1 - GENERAL

1.1 RELATED DOCUMENTS

A. The requirements set forth in the Bidding Requirements and the Contractual Conditions of Division 01 shall apply to this Section.

B. Examine other sections of the Project Manual for requirements which affect work of this section whether or not such work is specifically mentioned in this section.

1.2 SUMMARY STATEMENT1`

A. Test and balance of HVAC systems (both heating and cooling) and air exhaust systems shall be performed by an independent AABC or NEBB certified test and balance agency.

B. The Contractor and the Test and Balance Agency, shall coordinate all work required so that the test and balance work is complete and the final report delivered one week prior to the scheduled Substantial Completion date. The Test and Balance Agency shall be at the site with his test equipment during the Substantial Completion Inspection so that random report values may be verified.

C. Test and balance work shall not begin until all systems have been completed and are in full working order. Place all systems and equipment into full operation during each working day of testing and balancing.

1.3 DESCRIPTION OF WORK

A. Extent of testing, adjusting and balancing work is indicated by requirements of this section, and also by drawings and schedules, and is defined to include, but is not necessarily limited to, air distribution systems, hydronic distribution systems and associated equipment and apparatus of mechanical work. The work consists of setting speed and volume (flow), adjusting facilities provided for systems, recording data, conducting tests, preparing and submitting reports and recommending modifications to work as required by contract documents.

B. Component types of testing, adjusting and balancing specified in this section includes the following, but not limited to, as applied to mechanical equipment:

Fans
Air Handling Units
Condensing Units

Ductwork systems

C. Testing and balancing shall be begun and completed during each season, heating and cooling; i.e. cooling system during the cooling season and heating system during the heating season. All systems shall be tested and balanced under full load conditions and a report submitted.

1. The HVAC system shall be started, operated and stopped to determine that it operates according to the design specifications and sequence of operations. Each element in the system shall be systematically and individually started, operated and stopped.
2. Temperature and humidity shall be measured and recorded in each room during each season's testing. Test and calibrate all temperature and humidity sensors.
3. Notification to perform the opposite season test and balance will be made by the Owner. The work shall then be scheduled by mutual agreement. The report shall be submitted within fifteen (15) days after completion of the work and shall include:
   a. Characterization of the system quality of operation.
   b. Data and results of test and balance work.
   c. Description of system deficiencies found and recommendations.

D. Cooperate with the test and balance agency in establishing a schedule to perform this work. If changes in the construction schedule affecting test and balance work are necessary, all such changes shall be coordinated with the test and balance firm.

E. Replacement pulleys (adjustable and non-adjustable), additional balancing dampers, pressure taps, etc., required to effect proper air balance shall be provided by the Contractor at no additional cost to the contract. The test and balance firm shall furnish the Contractor and Project Architect/Engineer at the end of each day a list of items that must be repaired, replaced or adjusted.

F. Air filters shall be replaced before proceeding with test and balance and thereafter as required by the test and balance firm.

G. Systems shall be placed into service using approved startup procedures. The Contractor shall be responsible for proper initial setting and adjustment of HVAC equipment, air handlers, exhaust fans, etc. furnished and installed by him and shall verify same for the test and balance firm.

H. Contractor shall provide test openings as required, shall operate HVAC equipment and provide trade persons to assist and make adjustments for test and balance during the process.

I. The test and balance firm shall periodically visit the site during construction of the HVAC system. No less than two visits shall be made. After each visit, the test and balance

firm shall report in writing to the Architect, with copy to the Engineer, its observations from the visit and potential problem areas. Should methods, materials or workmanship being used adversely affect balancing and adjusting work, the test and balance agency shall report its findings in the report to the Architect with recommendations for correction.

J. The test and balance firm executing this test and balance work shall hold valid Certificate of Authorization from the State of Florida Board of Professional Engineers to provide services under the firm name.

K. The test and balance firm shall carry out the test and balance work in accordance with the AABC National Standards for Total Systems Balance or the NEBB Procedural Standard for Testing, Adjusting and Balancing of Environmental systems, and in conformance with ASHRAE Handbook, Testing, Adjusting and Balancing.

L. The Contractor shall furnish to the testing and balancing agency a complete set of plans and specifications, addenda, shop drawings, schedules and change orders as may be required.

1.4 QUALITY ASSURANCE

A. Installer: A firm with not less than 3 years of similar experience and certified by Associated Air Balance Council (AABC) or NEBB in testing and balancing disciplines similar to those required for this project shall be employed.

B. Industry Standards: Comply with American Society of Heating, Refrigerating and Air Conditioning Engineers, Inc. (ASHRAE) recommendations pertaining to measurements, instruments and testing, adjusting and balancing, except as otherwise indicated.

C. The final result of balancing shall be to provide uniform air temperatures within a 2° F spread in the conditioned space at peak load conditions. All air flows shall be within –5/+10% of design air flows.

D. Gages and Thermometers installed as part of the project are not to be used for Test and Balance. The test and balance firm shall calibrate all such gages and thermometers and shall affix a permanent tag to each stating the corrections to be applied.

E. In the event of dispute with regard to test results, the Owner or Project Architect/Engineer may choose to provide verification of test and balance reports, and such verification shall be by a second independent agency selected by the Project Architect/Engineer or the Owner. Reports found to be inaccurate will be disallowed, and the test and balance firm will be required to repeat operations under the supervision of the second independent agency until accurate reports are completed and agreed upon. The cost of initial test and balance work will be borne by the Owner. The cost of verification test and balance work shall be borne by the Owner or Contractor or Project

Architect/Engineer (whichever demanded the second opinion). If the original test and balance reports are found inaccurate and subsequent costs of supervision are necessary in order to secure acceptable reports, such will be borne by the original test and balance firm.

1.5 SUBMITTALS

A. Submit five (5) certified test reports signed by Test and Balance Supervisor who performed testing and balancing work to Engineer and to the Architect one (1) week prior to substantial completion inspection.

1. Include identification and types of instruments used and their most recent calibration date with submission of final test report. Calibration shall be within six months of the date of equipment used on this project.
2. Report shall include a schematic diagram indication the system tested and the device number of the report correlated to the actual device of the system.

B. Maintenance Data: Include in maintenance manuals, copies of certified test reports.

1.6 JOB CONDITIONS

A. Do not proceed with testing, adjusting and balancing work until work has been completed and is operable. Ensure that there is no latent residual work still to be completed.

B. Do not proceed until work scheduled for testing, adjusting and balancing is clean and free from debris, dirt and discarded building materials.

1.7 GUARANTEE

A. The test and balance firm shall include extended services for six months after completion of test and balance work, during which time the Project Architect/ Engineer and/or Owner, at their discretion, may request a recheck or resetting of any piece of equipment listed in the test report believed to not be performing properly. The Contractor shall assist in this extended service.

B. The test and balance firm shall provide technicians to assist in making any tests required. Should the system be found to not work properly any time during the first year of operation it shall then be required to be rebalanced.

C. The test and balance agency shall provide to the Architect five (5) copies of a certified statement that the HVAC systems have been balanced to optimum performance capabilities in accordance with the intent of the Drawings and Specifications.

PART 2 - PRODUCTS

2.1 PATCHING MATERIALS

A. Except as otherwise indicated, use same products as used by original Installer for patching holes in insulation, ductwork and housings which have been cut or drilled for test purposes, including access for test instruments, attaching jigs, and similar purposes. At Tester's option, plastic plugs with retainers may be used to patch drilled holes in ductwork and housings. Test and Balance Agency shall coordinate with the system insulator to rework any void in the thermal insulation or moisture barrier.

2.2 TEST INSTRUMENTS

A. Utilize test instruments and equipment for testing and balancing work required, of type, precision and capacity as recommended in the following testing and balancing standards:

AABC's Manual MN-1 "AABC National Standards"

PART 3 - EXECUTION

3.1 TESTING, ADJUSTING AND BALANCING

A. Examine installed work and conditions under which testing is to be done to ensure that work has been completed, cleaned and is operable. Do not proceed with testing and balancing work until unsatisfactory conditions have been corrected in manner acceptable to Tester.

B. Test, adjust and balance environmental systems and components, as indicated, in accordance with procedures outlined in applicable standards.

C. Prepare report of test results, including instrumentation calibration reports, in format recommended by applicable standards. The report shall include a system schematic for each air handling system; clearly identifying which air device in the field corresponds to the air device in the Report.

D. Patch holes in insulation, ductwork and housings which have been cut or drilled for test purposes.

E. Mark equipment settings, including damper control positions, valve indicators, fan speed control levers and similar controls and devices, to show final settings at completion of testing and balancing work. Provide markings with paint or other suitable permanent identification materials.

F. Prepare a report of recommendations for correcting unsatisfactory mechanical performance when system cannot be successfully balanced; including, where necessary, modifications which exceed requirements of contract documents for mechanical work.

G. Retest, adjust and balance systems subsequent to significant system modifications, and resubmit test results.

H. The Test and Balance Contractor shall assist the Architect/Engineer in verifying that proper measuring instruments and methods were used.

3.2 TESTS

A. Direct Expansion Systems:

1. Air Distribution:
   a. Measure fan speeds, motor voltages, operating currents, CFM and static pressure at fan outlet.
   b. Adjust dampers, air supply and return and exhaust outlets to –5/+10% of design quantities. Supply grilles shall be adjusted to provide proper throw and uniform pattern.
   c. Measure air flow at duct connected return or exhaust grilles.
   d. Record the specified horsepower and all electrical characteristics of all motors.
   e. Record the actual installed motors as to horsepower and electrical characteristics.
2. Verify function and calibration of temperature controls to +/- 2.0 degree F. of set point.
3. Perform the following Cooling Cycle Temperature Measurements:
   a. "Entering air" temperature. (D.B. and W.B.)
   b. "Leaving air" temperature. (D.B. and W.B.)
   c. Outside air temperature. (D.B. and W.B.)
   d. Room temperature (D.B. and W.B.) measured near thermostats, four feet above floor.
   e. Air CFM at unit discharge. (D.B. and W.B.)
4. Perform the following heating cycle measurements:
   a. "Entering" and "Leaving" air temperatures. (D.B.)
   b. Outside air temperature. (D.B. and W.B.)
   c. Room temperature measured near thermostats four feet above floor.
   d. Air CFM at unit discharge. (D.B. and W.B.)

B. Temperature Control Systems:

1. The temperature controls installer shall cooperate fully with the test and balance firm to ensure maximum effective systems operation. The controls installer shall initially set, adjust, relocate (if necessary), calibrate and test all controls. The test and balance firm shall verify proper operation of controls and set controls to proper settings.
2. The Temperature Control Contractor shall:
   a. Verify that all control components are installed in accordance with project requirements and are functional, including electrical interlocks, damper sequences, air and water reset, and fire and freeze stats. Controls installer shall provide systems printouts to all points to ensure operation and communications with all terminal points.
   b. Verify that all controlling instruments are calibrated and set for design operating conditions.
   c. Calibrate room thermostats after installation and before the thermostat control verification tests are performed. The balancing agency shall prove the accuracy of final settings by taking temperature readings in the controlled space compared to the computer readings.
   d. The temperature control contractor shall allow sufficient time in the project to provide sufficient assistance and instruction to the balancing agency in the proper use and setting of control components such as computers, static pressure controllers, variable air volume boxes, or any other device that may need set points changed so that the testing and balancing work may be performed. All required hardware and software related to the installed control system shall be provided by the temperature control installer to the test and balance agency and the owner in order to allow testing of the systems and continued operation.
3. The test and balance firm shall perform the following:
   a. Check for proper location of humidistats, sensors and thermostats as well as verify proper design settings.
   b. Verify proper operation of switches, damper motors, motorized valves, solenoids and interlocks.
   c. Verify that proper sequence of operation occurs in all control modes and is in accordance with shop drawings and control diagrams (or point list).
   d. Verify proper calibration of all controls and list those controls requiring adjustment or recalibration.

C. Exhaust Fans/Hoods:

1. Measure exhaust fan static pressures, total CFM, makeup air and fan RPM.
2. Measure motor operating voltage and amperage.
3. Measure hood average face velocities and adjust as necessary. Where possible, balance the flow using a pitot transverse within hood where ducts are connected.

4. Record the specified against the actual supplied horsepower and electrical characteristics of all motors. Record if specified to be self or permanently lubricated.
5. Record the actual installed motors as to horsepower and electrical characteristics.

END OF SECTION 23 05 93

SECTION 23 07 00

HVAC INSULATION

PART 1 - GENERAL

1.1 RELATED DOCUMENTS

A. Drawings and general provisions of Contract, including General and Supplementary Conditions and Division 23 Specification sections, apply to work of this section.

B. The Bidding Requirements and Contractual Conditions set forth in Division 01 apply to this section.

1.2 DESCRIPTION OF WORK

A. Extent of HVAC insulation required by this section is indicated on drawings, and by requirements of this section.

B. Types of mechanical insulation specified in this section include the following:

1. Piping System Insulation:
   Refrigerant Piping Systems
   Condensate Piping Systems
2. Ductwork System Insulation:
   Cold/Cold Supply Air and Return Air Ductwork
   Air Plenums and Equipment Housings

1.3 QUALITY ASSURANCE

A. Firms regularly engaged in manufacturer of HVAC insulation products, of types and sizes required, whose products have been in satisfactory use in similar service for not less than 5 years.

B. Subject to compliance with requirements, manufacturers offering products which may be incorporated in the work include, but are not limited to, the following: Armstrong, Certainteed Corp., Johns-Manville Corp., Knauf Fiber Glass, Owens-Corning Fiberglass Corp., and Pittsburgh Corning Corp.

C. Installer: A firm with at least 5 years successful installation experience on projects with HVAC insulation similar to that required for this project.

D. Flame/Smoke Ratings: Provide composite HVAC insulation (insulation, jackets, coverings, sealers, mastics and adhesives) with flame-spread rating of 25 or less, and

Smoke-developed rating of 50 or less, as tested by ANSI/ASIM E 84 (NFPA 255) method.

E. Appropriate ASTM, ANSI, UL, ASME and NFPA standards shall be met.

1.4 SUBMITTALS

A. Submit manufacturer's specifications and installation instructions for each type of HVAC insulation. Submit schedule showing manufacturer's product number, thickness, and furnished accessories for each HVAC system requiring insulation. Include reference to minimum FBC and Florida Energy Efficiency Code values on the submittal. Submit certified test reports on performances including burning characteristics and thermal insulating valves.

B. Submit maintenance data and replacement material lists for each type of HVAC insulation. Include this data in the Operation and Maintenance Manual.

1.5 DELIVERY, STORAGE, AND HANDLING

A. Deliver insulation, coverings, cements, adhesives, and coatings to site in containers with manufacturer's stamp or label, affixed showing fire hazard ratings of products.

B. Protect insulation against damage. Do not install damaged insulation; remove from project site.

C. Protect cements, adhesives and coatings from freezing.

PART 2 - PRODUCTS

2.1 PIPE INSULATION MATERIALS

A. Adhesives, Sealers, and Protective Finishes:

1. Vapor Barrier Coatings--Permeance shall be no greater than 0.08 perms at 37 mils dry as tested at 100F and 90% RH by ASTM F1249. Foster 30-80 AF, or approved equal

2. Lagging Adhesives—used in conjunction with canvas or glass lagging cloth to protect equipment/piping indoors. Foster 30-36 AF, Childers CP-137 AF, or approved equal. Coatings shall meet ASTM D 5590 with 0 growth rate.

3. Weather Barrier Mastic—used outdoors to protect above ambient insulation from weather. Foster 46-50 Weatherite, Childers CP-10 Vi Cryl, or approved equal

4. Insulation Joint Sealant—used as a vapor sealant on below ambient piping with cellular glass insulation. Foster 95-50; Childers CP-76; or approved equal.

5. Metal Jacketing Sealant—used as a sealant on metal jacketing seams to prevent water entry. Foster 95-44; Childers CP-76; approved equal

6. Reinforcing Mesh—used in conjunction with coatings/mastics to reinforce. Foster Mast A Fab; Childers Chil Glas #10; or approved equal

2.2 DUCTWORK INSULATION MATERIALS

A. Rigid Fiberglass Ductwork Insulation: FS-HH-I-558, Form A, Type Rigid, Class as indicated. K = .27 at 75° F. Installed minimum R-value shall be 6.0.

1. Provide Class 1 (non-load bearing) where insulation is not subjected to compressive loading.
2. Provide Class 2 (load bearing) where insulation is subjected to compressive loading; except provide higher Class where indicated. Provide on exposed ductwork in Mechanical Room from floor to six (6) feet above floor.

B. Flexible Fiberglass Ductwork Insulation: FS HH-I-558, Form B. Type I, Class as indicated:

1. Provide Class 6 for temperatures up to and including 350° F (177° C). K = .25 at 75° F.

C. Vapor Barrier Material for Ductwork: FS HH-B-100; paper-backed aluminum foil, except as otherwise indicated; strength and permeability rating equivalent to factory-applied vapor barriers on adjoining ductwork insulation, where available; with following additional construction characteristics.

1. High Puncture Resistance: Type I, low vapor transmission (for ducts in exposed areas).
2 Vapor Barrier Coating--Permeance shall be no greater than 0.08 perms at 45 mils dry as tested by ASTM E96/ASTM F1249. Foster 30-65, Childers CP-34, or approved equal (for vapor seal of all taped seams, breaks, punctures in duct insulation)

D. Ductwork Insulation Accessories: Provide staples, bands, wires, tape, anchors, corner and angles and similar accessories as recommended by insulation manufacturer for applications indicated.

PART 3 - EXECUTION

3.1 HVAC PIPING SYSTEM

A. Refrigerant and Condensate Piping:

1. Insulate piping systems with 3/4-inch thick Armaflex insulation. When exposed outdoors, insulation shall be UV rated.

3.2 DUCTWORK SYSTEM INSULATION

A. Ductwork:

1. Insulate the following cold ductwork:
   a. Outdoor air intake ductwork air entrance and fan inlet or HVAC unit inlet.
   b. HVAC supply ductwork between fan discharge, or HVAC unit discharge, and room terminal outlet.
   c. HVAC return air ductwork between room terminal inlet and return fan inlet, or HVAC unit inlet.
   d. HVAC plenums and unit housings not pre-insulated at factory.
2. Insulate with one of the following type and thickness of insulation:
   a. Insulation: Rigid fiberglass; 1-1/2" thick, increase thickness to 2" in machine, fan and equipment rooms, K = .25 at 75° F.
   b. Insulation: Flexible fiberglass; 1-1/2" thick, application limited to concealed locations, K = .25 at 75° F.

3.3 INSTALLATION OF PIPING INSULATION

A. Install insulation products in accordance with manufacturer's written instructions, and in accordance with recognized industry practices to ensure that insulation serves its intended purpose.

B. Install insulation on pipe systems subsequent to testing and acceptance of pressure tests.

C. Install insulation materials with smooth and even surface. Insulate each continuous run of piping with full-length units of insulation, with single cut piece to complete run. Do not use cut pieces or scraps abutting each other.

D. Clean and dry pipe surfaces prior to insulating. Butt insulation joints firmly together to ensure complete and tight fit over surfaces to be covered.

E. Maintain integrity of vapor-barrier jackets on pipe insulation, and protect to prevent puncture or other damage.

F. Cover valves, fittings and similar items in each piping system with equivalent thickness and composition of insulation as applied to adjoining pipe run. Install factory molded, precut or job fabricated units (at Installer's option) except where specific form or type is

indicated. On all cold piping, coat insulated valves, fittings, and elbows with vapor barrier coating and reinforcing mesh.

G. On all cold piping, seal all longitudinal and butt insulation joints (foam glass) with insulation joint sealant as specified. Coat all, all service jacket (ASJ) seams, both longitudinal and butt, with vapor barrier coating.

H. Extend piping insulating without interruption through walls, floors and similar piping penetrations.

I. Install protective metal shields (saddles) and insulated inserts wherever needed to prevent compression of insulation.

J. Pipe Hanger Insulation Inserts: Butt pipe insulation against pipe hanger insulation inserts. For hot pipes, apply 3" wide vapor barrier tape or band over the butt joints. For cold piping apply wet coat of vapor barrier lap cement on butt joints and seal joints with 3" wide vapor barrier tape or band.

3.4 INSTALLATION OF DUCTWORK INSULATION

A. Install insulation products in accordance with manufacturer's written instructions, and in accordance with recognized industry practices to ensure that insulation serves its intended purpose.

B. Install insulation materials with smooth and even surfaces.

C. Clean and dry ductwork prior to insulating. Butt insulation joints firmly together to ensure complete and tight fit over surfaces to be covered.

D. Maintain integrity of vapor-barrier on ductwork insulation, and protect it to prevent puncture and other damage. Coat all taped seams and punctures with vapor barrier coating.

E. Extend ductwork insulation without interruption through walls, floors and similar ductwork penetrations.

F. Protect outdoor insulation from weather by installing weather barrier mastic/reinforcing mesh or jacketing as recommended by manufacturer, or as indicated on drawings.

G. Corner Angles: Except for oven and hood exhaust duct insulation, install corner angles on external corners of insulation on ductwork up to seven (7) feet above finished floor in exposed finished spaces before covering with jacketing.

3.5 PROTECTION AND REPLACEMENT

A. Replace damaged insulation which cannot be repaired satisfactorily, including units with vapor barrier damage and moisture saturated units. If insulation has been allowed to become wet during the construction process, said materials shall be removed from the jobsite, and clean, dry materials installed.

B. Insulation Installer shall advise Contractor of required protection for insulation work during remainder of construction period, to avoid damage and deterioration.

END OF SECTION 23 07 00

SECTION 23 21 15

CONDENSATE PIPING SYSTEMS

PART 1 - GENERAL

1.1 RELATED DOCUMENTS

A. Drawings and general provisions of Contract, including General and Supplementary Conditions and Division 01 Specification sections, apply to work of this section.

B. Division 23 Basic Materials and Methods sections apply to work of this section.

C. Examine other sections of the Project Manual for requirements which affect work of this section whether or not such work is specifically mentioned in this section.

1.2 DESCRIPTION OF WORK

A. Extent of condensate piping work is indicated on the drawings and schedules, as indicated in Mechanical General Provisions and by requirements of this section.

B. Applications for condensate piping include the following:

1. Conductor piping from air handling equipment to building storm drain or as indicated on drawings.
2. Refer to appropriate Division 2 sections for exterior condensate system required in conjunction with storm water piping.
3. Refer to appropriate Division 23 sections for insulation required in conjunction with condensate piping.
4. Trenching and backfill required in conjunction with storm water piping is specified in applicable Division 2 sections, and is included as work of this section.

PART 2 - PRODUCTS

2.1 CONDENSATE PIPING MATERIALS AND PRODUCTS

A. Provide piping materials and factory-fabricated piping products of sizes, types, pressure ratings, and capacities as indicated. Where not indicated, provide proper selection as determined by Installer to comply with installation requirements. Provide sizes and types matching piping and equipment connections; provide fittings of materials which match pipe materials used in storm water piping systems.

2.2 BASIC PIPE, TUBE AND FITTINGS

A. Provide pipe, tube and fittings in accordance with the following listing:

B. Above Ground Drain Piping:

1. Pipe Size 1-1/4" and Larger: DWV copper hard drawn.
2. Fittings: DWV copper with 50/50 silver soldered joints.
3. Pipe Size 1" and Smaller: Type "L" copper, hard drawn.
4. Fittings: Wrought copper with 95/5 soldered joints.

C. Underground Drain Piping:

1. Pipe Size 6" and Smaller: Polyvinyl chloride pipe (PVC) DWV-ASTM D2665-82.
2. Pipe Class: Schedule 40
3. Fittings: PVC-DWV fittings with solvent weld cement ASTM D2564-80.

2.3 BASIC SUPPORTS, ANCHORS AND SEALS

A. Provide supports, anchors and seals complying with Division 23 Basic Materials and Methods section, "Supports, Anchors and Seals", in accordance with the following listing:

B. Adjustable steel clevises, steel pipe clamps and pipe saddle supports for horizontal piping hangers and supports.

C. Two-bolt riser clamps for vertical piping supports.

D. Concrete inserts, C-clamps, and steel brackets for building attachments.

E. Copper flashings for piping penetrations.

2.4 DRAINAGE PIPING PRODUCTS

A. Provide factory fabricated drainage piping products of size and type indicated. Where not indicated, provide proper selection as determined by Installer to comply with installation requirements and governing regulations.

B. Cleanout Plugs: Cast-bronze or brass, threads complying with ANSI B2.1 countersunk head.

C. Floor Cleanouts: Cast-iron body and frame: cleanout plug; adjustable round top as follows:

Nickel-Bronze Top: Manufacturer's standard cast unit of pattern indicated.

D. Available Manufacturers: Subject to compliance with requirements, manufacturers offering piping products which may be incorporated in the work include the following: Ancon, Inc., Josam Manufacturing Co., J.R. Smith Manufacturing Co., Wade Div., Tyler Pipe, Zurn

PART 3 - EXECUTION

3.1 INSTALLATION OF BUILDING DRAIN PIPING

A. Lay building drains beginning at low point of systems, true to grades and alignment indicated with unbroken continuity of invert. Clear the interior of piping from dirt and other superfluous material. Place plugs in ends of uncompleted piping at end of day or whenever work stops.

B. Install condensate piping pitched to drain at minimum slope of 1/4" per foot (2%) for piping 3" and smaller, and 1/8" per foot (1%) for piping 4" and larger.

3.2 EQUIPMENT CONNECTIONS

A. Provide union and P-trap with cleanout and union connection to equipment. Refer to details on drawings.

B. Provide condensate piping as required and make connection to all Owner furnished/Contractor installed equipment.

3.3 INSTALLATION OF DRAINAGE PIPING PRODUCTS

A. Cleanouts: Install in condensate piping as indicated, as required by the Florida Building Code; at each change in direction of piping greater than 45°; at minimum intervals of 50' for piping 4" and smaller and 100' for larger piping; and at base of each conductor. Install floor and wall cleanout covers for concealed piping. Select type to match adjacent building finish.

B. Flashing Flanges: Install flashing flange and clamping device with each cleanout passing through water proof membrane.

END OF SECTION 23 21 15

SECTION 23 23 00

REFRIGERANT PIPING SYSTEMS

PART 1 - GENERAL

1.1 RELATED DOCUMENTS

A. Drawings and general provisions of Contract, including General and Supplementary Conditions and Division 01 specification sections, apply to work of this section.

B. Examine other sections of the Project Manual for requirements which affect work of this section whether or not such work is specifically mentioned in this section.

C. Section 230000 – HVAC applies to work of this section.

1.2 DESCRIPTION OF WORK

A. Extent of refrigeration piping systems work is indicated on drawings and schedules, and by requirements of this section.

B. Applications for refrigeration piping systems include the following:

1. Refrigerant suction line piping between compressors and cooling coils.
2. Refrigerant liquid line piping between liquid receivers and cooling coils.
3. Refrigerant discharge line piping between compressors and condensers.
4. Refrigerant condenser drain line piping between condensers and liquid receivers.

1.3 QUALITY ASSURANCE

A. Manufacturers: Firms regularly engaged in the manufacture of refrigeration piping products, of types, materials, and sizes required, whose products have been in satisfactory use in similar service for not less than 5 years.

B. Installer: A firm with at least 3 years of successful installation experience on projects with refrigeration piping system work similar to that required for project.

C. Comply with applicable provisions of ANSI B31.5 and ANSI B31.5a, "Refrigeration Piping", and extend applicable lower pressure limits to pressures below 15 PSIG.

D. Comply with applicable portions of ANSI/ASHRAE 15, "Safety Code for Mechanical Refrigeration".

E. Comply with applicable requirements of ANSI B31.5, and ANSI B31.5a, "Refrigeration Piping", pertaining to brazing of refrigeration piping for shop and project site locations.

1.4 SUBMITTALS

A. Submit manufacturer's data for refrigeration piping systems materials and products.

B. Certify brazing procedures, brazers and operators in accordance with ASME standards (ANSI B31.5).

C. Submit scaled layout drawings of installed refrigeration pipe and fittings including, but not necessarily limited to, pipe sizes, locations, elevations and slopes of horizontal runs, wall and floor penetrations, and connections. Show interface and spatial relationship between piping and equipment. Coordinate pipe size requirements with the equipment supplier.

PART 2 - PRODUCTS

2.1 REFRIGERATION PIPING MATERIALS AND PRODUCTS

A. Provide piping materials and factory-fabricated piping products of sizes, types, pressure ratings, temperature ratings, and capacities as indicated. Provide materials and products complying with ANSI B31.5 Code for refrigeration piping where applicable; base pressure rating on refrigeration piping system maximum design pressures. Provide sizes and types matching piping and equipment connections; provide fittings of materials which match pipe materials used in refrigeration piping systems.

2.2 BASIC PIPE, TUBE AND FITTINGS

A. Provide pipe, tube and fittings in accordance with the following listing:

B. Tube ¾” and Larger: Copper tube.

1. Wall Thickness: Type ACR, hard drawn temper.
2. Fittings: Wrought-copper, solder-joints (lead free)
3. Joints: Soldered, silver solder, ANSI/ASTM B 32, Grade 96 TS.

C. Tube Size 3/4" and Smaller: Copper tube.

1. Wall Thickness: Type ACR, soft annealed temper.

2. Fittings: Cast copper-alloy for flared copper tubes.
3. Joints: Flared.

2.3 BASIC SUPPORTS, ANCHORS AND SEALS

A. Provide supports, anchors and seals complying with Division 23 Basic Materials and Methods section, "Supports, Anchors and Seals", in accordance with the following listing:

1. Adjustable steel clevises, adjustable roller hangers, and adjustable pipe roll stands for horizontal piping hangers and supports.
2. Two-bolt riser clamps for vertical piping supports.
3. Concrete inserts, C-clamps and steel brackets for building attachments.
4. Protection shields for insulated piping support in hangers.
5. Copper flashing for piping penetrations.

2.4 SPECIAL REFRIGERATION VALVES

A. Special valves required for refrigeration piping systems include the following types:

1. Globe and Check Valves:
   a. Globe and Shutoff Valves: Forged brass, packed, back seating, winged seal cap, 300° F (149° C) temperature rating, 500 psi working pressure.
   b. Check Valves: Forged brass, accessible internal parts, soft synthetic seat, fully guided brass piston and stainless steel spring, 250° F (121° C) temperature rating, 500 psi working pressure.
   c. Available Manufacturers: Subject to compliance with requirements, manufacturers offering globe and check valves which may be incorporated in the work include the following:
      Henry Valve Co.
      Parker Hannifin Corp., Refrigeration & Air Conditioning Div.
      Sporlan Valve Co.

2. Solenoid Valves:
   a. Two-way Solenoid Valves: Forged brass, designed to conform to ARI 760, normally closed, teflon valve seat, NEMA 1 solenoid enclosure, 24 volt, 60 hertz, UL-listed, 1/2" conduit adapter, 250° F (121° C) temperature rating, 400 psi working pressure.
      Manual Operator: Provide manual operator to open valve.
   b. Available Manufacturers: Subject to compliance with requirements, manufacturers offering solenoid valves which may be incorporated in the work include the following:
      Alco Controls Div., Emerson Electric Co.
      Automatic Switch Co.

Sporlan Valve Co.

2.5 REFRIGERATION ACCESSORIES

A. Refrigerant Strainers: Brass shell end and connections, brazed joints, Monel screen, 100 mesh, UL-listed, 350 PSI working pressure.

B. Moisture-Liquid Indicators: Forged brass, single port, removable cap, polished optical glass, solder connections, UL-listed 200° F (93° C) temperature rating, 500 PSI working pressure.

C. Refrigerant Filter-Driers: Corrosion-resistant steel shell, steel flange ring and spring, wrought copper fittings, ductile iron cover plate with steel cap screws, replaceable filter-drier core, 500 PSI working pressure. All filter-driers shall meet the requirements of ARI Standard 710. Filter-Driers for heat pump systems shall be bi-flow type.

D. Evaporator Pressure Regulators: Provide corrosion-resistant, spring-loaded, stainless steel springs, pressure operated, evaporator pressure regulator, in size and working pressure indicated, with copper connections.

E. Refrigerant Discharge Line Mufflers: Provide discharge line mufflers as recommended by equipment manufacturer for use in service indicated, UL-listed.

F. Available Manufacturers: Subject to compliance with requirements, manufacturers offering refrigeration accessories which may be incorporated in the work include the following: Alco Controls Div., Henry Valve Co., Parker-Hannifin Corp., Sporlan Valve Co.

PART 3 - EXECUTION

3.1 REFRIGERANT PIPING INSTALLATION

A. Refrigerant piping shall be sized as per recommendations of the air conditioning equipment manufacturer. Provide, upon request, copies of manufacturer's calculations, specifically when distance between system components exceeds standard published data.

B. Piping shall be filled with dry nitrogen while soldering.

C. Provide all necessary valves, traps, filter/dryers, sight glass, etc. as required for a complete and ready to operate installation. Include accessible service fittings.

D. When underground, refrigerant pipes and associated control wires shall be encased in a schedule 40 PVC conduit. Diameter of conduit shall be large enough to allow the

installation and removal of all refrigerant lines and control wires. Seal ends with approved foam.

E. Provide long sweep elbows or junction boxes at the ends of conduit to facilitate pulling of refrigerant pipes.

F. The open ends of the PVC conduit or boxes shall be sealed to keep water and vermin from entering the pipe. Ends of PVC conduit shall extend a minimum of 6" above ground or concrete slab.

G. A separate PVC conduit shall be provided for each air conditioning system and for each refrigerant circuit on units with multiple circuits.

3.2 INSTALLATION OF REFRIGERATION PIPING

A. Pitch refrigerant piping in direction of oil return to compressor. Provide oil traps and double section risers where indicated, and where required to provide oil return.

3.3 INSTALLATION OF SPECIAL REFRIGERATION VALVES

A. Install refrigeration valves where indicated, and in accordance with manufacturer's instructions. Remove accessible internal parts before soldering or brazing, replace after joints are completed.

Solenoid Valves: Install in refrigerant piping as indicated with stem pointing upwards.

3.4 INSTALLATION OF REFRIGERATION ACCESSORIES

A. Refrigerant Strainers: Install in refrigerant lines as indicated, and in accessible location for service.

B. Moisture-Liquid Indicators: Install as indicated on refrigerant liquid lines, in accessible location.

C. Refrigerant Filter-Dryers: Install in refrigerant lines as indicated, and in accessible location for service.

D. Evaporator Pressure Regulators: Install in refrigerant suction lines or evaporator outlets as indicated. Adjust, if required, for proper evaporator pressure.

E. Refrigerant Discharge Line Mufflers: Install as indicated, in horizontal or down flow portion of hot-gas lines, immediately after leaving compressor; not in riser.

3.5 EQUIPMENT CONNECTIONS

A. Connect refrigerant piping to mechanical equipment in manner shown, and comply with equipment manufacturer's instructions where not otherwise indicated.

3.6 FIELD QUALITY CONTROL

A. Refrigerant Piping Leak Test: Prior to initial operation, clean and test refrigerant piping in accordance with ANSI B31.5 and ANSI B31.5a, "Refrigeration Piping". Perform initial test with dry nitrogen, using soap solution to test all joints. Perform final test with 27" vacuum, and then 200 psi using halide torch. System must be entirely leak-free.

B. Repair or replace refrigerant piping as required to eliminate leaks, and retest as specified to demonstrate compliance.

END OF SECTION 23 23 00

SECTION 23 30 00

AIR DISTRIBUTION SYSTEM

PART 1 - GENERAL

1.1 GENERAL REQUIREMENTS

A. The requirements of the General Conditions, Supplementary General Conditions, and of Section 230000 - HVAC shall apply to all work under this Section.

B. Examine other sections of the Project Manual for requirements which affect work of this section whether or not such work is specifically mentioned in this section.

C. Coordinate work with that of other trades affecting, or affected by, work of this Section. Cooperate with such trades to assure the steady progress of all work under the contract.

1.2 SCOPE

A. Work under this Section shall include providing the following:

1. Sheet metal supply and return air ductwork, round or rectangular from each air handling unit to each terminal air device.
2. Terminal air distribution devices including diffusers, grilles, registers, and all special air flow control and directing devices. Provide frame required for ceiling construction type.
3. Hangers and supports for all duct systems and duct mounted equipment.
4. Air volume control devices, balancing dampers and flexible connections to all air moving equipment subject to vibration.
5. Install duct mounted devices being provided under another Section of the contract documents, such as temperature control dampers, temperature control devices, etc. Assist in the coordination of such work. Meet and fully comply with manufacturers installation instructions.
6. Labor to operate air systems and make adjustments to achieve complete test and balance in cooperation with work performed under Test and Balance.
7. Assist in the development of coordination drawings for all ceiling spaces indicating location of air distribution systems and all systems sharing ceiling space.
8. All ductwork indicated on drawings is schematic and shall not be scaled. Therefore, changes in duct sizes and/or location may be made where necessary to conforrn to space conditions without additional cost to the Owner. All duct dimensions are clear inside dimensions.

1.3 QUALITY ASSURANCE

A. The following codes and standards are to be considered a part of this specification to establish quality of materials and labor.

NFPA 90A	Installation of Air Conditioning and Ventilation Systems (2009)
NFPA 90B	Installation of Warm Air Heating and Air Conditioning Systems (2009)
SMACNA	HVAC Duct Construction Standards, Metal and Flexible (2005)
SMACNA	Fire, Smoke and Radiation Damper Installation Guide, Fufth Edition
SMACNA	HVAC Air Duct Leakage Test Manual
ASHRAE	Method of Testing HVAC Air Ducts and Fittings Standard 126-2008

B. Reference made to the "Manual" shall mean applicable SMACNA Standards as published by Sheet Metal and Air Conditioning Contractors National Association, Inc.

C. Tables, descriptions and drawings in the Manual show methods of fabrication of items such a ductwork, dampers, louvers, and air intakes. These methods shall be followed unless manufactured products are specified for these items.

D . Manufacturer's model names and numbers used in this section of the specifications are subject to change per manufacturer's action. Contractor shall, therefore, verify them with manufacturer's representative before ordering any product or equipment. Immediately notify architect/engineer of any changes.

1.4 SHOP DRAWINGS

A. Submit catalog cuts and specification sheets for the following items:

Flexible duct
Flexible Connections
Duct Construction Standards
Dampers
Turning Vanes
Test Reports
Operating and Maintenance Data
Guarantees
Pressure Sensitive Tape
Duct Sealing Materials
Grilles, Registers, and Diffusers
Control Dampers
Fire Dampers
Smoke Dampers
Fire and Smoke Dampers
Duct Access Doors

B. Prior to commencing work, submit detailed 1/4" scale ductwork installation drawings. Drawings shall indicate coordination with other ceiling devices, ceiling plenum materials and the bottom elevation of all ducts.

C. At project closeout, submit 1/4" scale record drawings of installed ductwork, duct accessories, and outlet/inlets, etc.

1.5 DELIVERY, STORAGE, AND HANDLING

A. Protect shop-fabricated and factory-fabricated ductwork, accessories and purchased products from damage during shopping, storage and handling. Prevent end damage and prevent dirt and moisture from entering ducts and fittings.

B. Where possible, store ductwork inside and protect from weather. Where necessary to store outside, store above grade and enclose with waterproof wrapping.

PART 2 - PRODUCTS

2.1 MATERIALS GENERAL

A. Ductwork

1. Where ductwork is indicated to be exposed to view in occupied spaces, provide materials which are free from visual imperfections including pitting, seam marks, roller marks, oil canning, stains and discolorations, and other imperfections, including those which would impair painting. Clean and treat to accept paint.
2. Except as otherwise indicated, fabricate ductwork from galvanized sheet steel complying with ANSI/ASTM A 527, lockforming quality, with ANSI/ASTM A 525, G90 zinc coating; mill phosphatized for exposed locations.
3. Where indicated, provide stainless steel complying with ANSI/ASTM A 167; AISI type 302/304/316 with No. 4 directional polish where exposed to view in occupied spaces. Protect finished surfaces with mill-applied adheisive protective paper, maintained through fabrication and installation.

B. Duct Sealer:

1. Hardcast 601, Foster 32-19, Childers CP-146, or United McGill Unimastic 181. Sealer shall be UL Listed.
2. Flame spread 25 or lower in dry state
3. Smoke development 50 or lower in dry state
4. Refer to TABLE 1-2, Standard Duct Sealing Requirements, of the Manual.
5. Ductwork shall be sealed to the following Class per the SMACNA Manual:

APPLICABLE DUCT PRESSURE CLASS	SEAL CLASS
2” W.G. AND BELOW	C

3” W.G.	B
4’ W.G. AND UP	A

2.2 SHEET METAL DUCT SYSTEM

A. Sheet metal ductwork includes, but is not limited to:

1. Supply, exhaust, return, and outside air ducts.
2. Construct pressure duct system in accordance with SMACNA HVAC Duct Construction Standards, Metal and Flexible, (2005), hereinafter referred to as the "Manual".
3. Use the Manual Duct Construction Tables for metal gauge, reinforcing type, spacing, and method of fabrication. Indicate on shop drawings.
4. Seal all joints as per Table 1-2. All screw penetrations shall be sealed.
5. Runouts to diffusers may be flexible ducts where shown on the plans.
6. Ductwork shall be fabricated in accordance with Table I-15 duct pressure class ratings based upon duct operating pressure obtained on the Equipment Schedule.
7. Rectangular ducts shall be reinforced in accordance with Tables 1-3 through 1-13 of the Manual.

B. Sheet metal ductwork shall be constructed to the following duct pressure class per the SMACNA Manual:

DUCT PRESSURE CLASS	OPERATING PRESSURE
½” W.G.	UP TO ½” W.G.
1” W.G.	OVER ½” UP TO 1” W.G.
2” W.G.	OVER 1” UP TO 2” W.G.
3” W.G.	OVER 2” UP TO 3” W.G.
4” W.G.	OVER 3” UP TO 4” W.G.

C. Round and oval ductwork shall be constructed in accordance with the requirements of Chapter 3 of the Manual.

D. Hangers and Supports:

1. Hangers and supports shall be provided in accordance with Chapter IV of the Manual.
2. Hanger attachment to structure shall be as shown by Fig. 4-1 through Fig. 4-4.
3. Hanger size and spacing shall be as shown by Tables 4-1 through 4-3.
4. No power driven anchors shall be used.

E. Fittings and Other Construction:

1. Fittings and other construction shall be fabricated in accordance with Chapter 2 of the Manual.
2. Supply, return, and exhaust air ducts shall be installed with fittings, dampers, etc., as indicated on Figure 2-1.
3. Radius elbows shall be constructed with a centerline radius of 1.5 times the duct width. Where a smaller radius or square elbows are used, provide turning vanes to produce a pressure drop less than that of an elbow with 1.5 radius.
4. Transitions shall be constructed with no side at a greater angle than 30 degrees from duct center line on contracting flow, and 22.5 degrees maximum diverging flow. See Fig. 2-7 of the Manual.
5. Connections to diffusers and registers shall be made with collars secured to duct and air devices. Branch ducts shall be fabricated in accordance with Table 2-15 of the Manual.
6. Volume dampers shall be installed on all branch lines. Dampers shall be fabricated as shown by Figures 2-12 and 2-13 of the Manual.
7. Branch connections shall be constructed as shown by Fig. 2-6. "Spin-In" connections shall be sealed.

F. Turning and Splitter Vanes:

1. Turning vanes shall be provided in all square elbows. Splitter vanes shall be provided in all duct offsets larger than 15 degrees and radius elbows.
2. Turning vanes shall be constructed as shown by Figures 2-3 and 2-4 of the Manual.
3. Vanes shall be double thickness "airfoil" design, except in ducts 10 " or less in depth where single thickness vanes with trailing edges may be used.

G. Kitchen hood exhaust ductwork shall be fabricated stainless steel not less than .043 in. (18 gage). All seams, joints and penetrations shall have liquid tight continuous external weld, except where the duct stub collar of the hood is connected to the exhaust duct. This connection shall be continuous liquid-tight external weld. Provide openings for cleaning the interior of the ducts with covers constructed of the same materials and thickness of the ducts and shall not permit the passage of grease under any circumstances. Fabricate as required by NFPA 96, Chapter 3. Exhaust duct(s) shall be insulated with a UL labeled fire blanket specifically fabricated for shch use. Blanket shall be as manufactured by Fire Master or Premier.

H. Flexible Connections: Provide flexible duct connections wherever ductwork connects to vibration isolated equipment. Construct flexible connections of neoprene-coated flameproof fabric crimped into duct flanges for attachment to duct and equipment. Make airtight joint. Provide adequate joint flexibility to allow for thermal, axial, transverse, and torsional movement, and also capable of absorbing vibrations of connected equipment.

2.3 FACTORY-FABRICATED DUCTWORK

A. At installer's option, provide factory-fabricated duct and fittings, in lieu of shop-fabricated duct and fittings.

B. Galvanized sheet steel complying with ANSI/ASTM A527, lockforming quality, with ANSI/ASTM A525, G90 zinc coating, mill phosphatized.

C. Gage: 28 ga. Minimum for round and oval ducts and fittings, 4" through 24" diameter.

D. Elbows: One piece construction for 90 degree and 45 degree elbows 14" and smaller. Provide multiple core construction for larger diameters with standing seam circumferential joint.

E. Divided Flow Fittings: 90 degree tees, constructed with saddle tap spot welded and bonded to duct fitting body.

F. Available Manufacturers: Subject to compliance with requirements, manufacturers offering factory-fabricated ductwork which may be incorporated in the work include, but not limited to, the following: United Sheet Metal Div., United McGill Corp., Semco Manufacturing, Inc., Sheet Metal Products Co.

2.4 FIBROUS DUCTBOARD SYSTEM

A. All supply air ducts, return air ducts and related fittings of ninety-six inch (96”) (2.4m) width span or less operating at ± 2 in. W.G. (500 Pa) shall be fabricated from a MIN R-6, 1-1/2” (38mm) Type 800 Duct Board. Type 800 designates board stiffness as defined by flexural rigidity. Flexural rigidity is the product of Young’s Modulus of Elasticity (E) and the moment of inertia (I).

The facing shall be foil-kraft laminate reinforced with scrim. Provide antimicrobial coating equal to Owens Corning EnDuraCoat Duct Board, to (1) isolate the glass fiber substrate, (2) inhibit penetration of the insulation by dust, dirt or other pollutants, and (3) provide a surface that is cleanable.

B. Closure materials shall be one of the following:

1. Pressure-sensitive aluminum foil tapes listed and labeled under UL 181A, Part 1 (P), identified by name, date of manufacture, product name/number, and UL 181a/P. Tapes shall be at least two and one half (2-1/2”) (64mm) wide. Pressure-sensitive tapes shall be used to seal to properly cleaned sheet metal when duct pressure does not exceed 1 in. W.G. (250 Pa).
2. Heat activated tapes listed and labeled under UL 181A, Part II (H), identified by name, date of manufacture, product name/number, and UL 181A/H, may be used in all applications except for bonding to sheet metal. Tapes shall be at three (3”) (76mm) wide. Heat-sealing equipment must be capable of maintaining a

temperature at the duct surface to assure an adequate bond. Staples may be omitted when closures are made by machine using heat-activated tape.

3. Mastic and glass fabric systems listed and labeled under UL 181A, Part III (M). Glass fabric tape shall be three (3”) (76mm) wide. This system shall be used to seal duct board to sheet metal ducts and/or equipment where operating pressures exceed 1 in. W.G. (250 Pa). This closure system may be used as an alternative to either pressure-sensitive or heat-activated tapes for all closure applications.

2.5 ACCESS DOORS

A. In ductwork use the largest door size that can be installed, up to size 24" x 24" maximum, to permit easy inspection and servicing of duct mounted devices. Doors shall be as per Figures 2-10 and 2-11 of the Manual. Minimum size shall be 12” x 12”. Access doors 6" and 8" in width shall be not less than 12" long.

B. Insulated doors shall be hollow metal type with insulation of same thickness as for adjacent ductwork.

C. Since the purpose of the access doors/panels is to facilitate access to concealed equipment and other devices, the size of each door/panel shall be determined in the field prior to ordering them.

D. All doors/panels shall be of the hinged type with easily opened locking devices, unless safety or fire rated considerations require otherwise.

E. Doors/panels that are found by the Architect or Owner to be of inadequate size to allow proper access to equipment and other concealed devices shall be promptly replaced at no cost to the contract.

F. Doors/panels that are found by the Architect or Owner to be improperly located, with relation to the equipment or concealed devices they serve, shall be relocated at no cost to the contract.

2.6 DAMPERS AND DAMPER OPERATORS

A. Manual Dampers: Provide dampers of single or multi-blade type, constructed in accordance with SMACNA manual.

B. Single blade manual volume damper operators shall be equal to Ruskin, Ventfabrics, Durodyne or as approved, quadrant regulator with damper position indicator level and locking device.

C. Multi-leafs volume dampers operators shall be equal to Ruskin, Ventfabrics, Durodyne, or as approved, selflocking regulator with damper position indicator. Motorized dampers shall be of the low leakage design.

2.7 FLEXIBLE DUCTS

A. Flexible ducts shall be provided where indicated on drawings. Ducts must comply with the latest NFPA Bulletin 90A and be listed as Class I Air Duct, Standard 18 1.

B. Liner shall be a trilaminate of aluminum foil, fiberglass, and aluminized polyester, all mechanically locked without adhesives.

C. Ducts shall be factory insulated with glass fiber insulation having a "C" value of 0.23; vinyl vapor barrier jacket; a flame spread rating of 25, and smoke density factor of 50.

D. Ducts shall be rated for 2 inch water gauge static pressure applications.

E. The maximum length of flexible ducts to air devices shall be limited to six feet (6').

F. The duct shall have an inside bending radius of its inside diameter.

G. All flexible duct terminations to be secured with galvanized metal bolted draw band. Secure with a minimum of three sheet metal screws after band is tight. Seal cut ends of insulation with approved tape.

H. Flexible duct shall be Thermaflex, Genflex, or Flexmaster.

2.8 SPIN IN FITTINGS

A. Spin-in fittings shall be provided at the point of connection of flexible ducts to metal ducts, where indicated on drawings, and as herein specified. Fittings shall be specifically manufactured for sheet as applicable.

B. Fittings shall be conical bellmouth type of galvanized steel, welded or riveted construction to meet system pressures. Fittings shall have integral dampers with handle indicating position at damper quadrant.

C. The adjustable damper components shall be factory assembled using spring loaded, retraceable bearing, and positive locking regulator damper hardware.

D. When fitting diameter equals or exceeds available duct dimensions, proceed as follows:

For rectangular ducts, use Flexmaster Type STO, Sheet Metal Connectors, Inc. Series H.E.T., or Crown Series 3300, with a volume damper.

E. Acceptable manufacturer for galvanized sheet metal is Flexmaster 300OS-CB-D, Crown Series 3200.

2.9 REGISTERS, GRILLES AND CEILING DIFFUSERS

A. By "register" is meant a face together with the box and dampers. By "grille" is meant the face only. All dampers is in supply air registers shall be opposed blade type.

B. All air distribution devices shall be the product of the same manufacturer, unless otherwise noted.

C. Maximum permissible sound level of all air supply devices shall not be more than NC-25. Lower where indicated.

D. Ceiling supply diffusers shall have dampers, distribution grids and, where necessary, approved type baffles.

E. The size and capacities of all diffusers, registers, and grilles are indicated on the drawings.

F. Select each air handling device to meet the indicated sound level criteria, air velocities and distribution pattern for every area.

G. Provide frames as required for the installation of the air devices on the ceiling or wall construction indicated on the architectural plans.

Air devices connected to flexible ducts shall not be supported by ceiling tiles. Provide additional supports attached directly to the ceiling grid.

H. At the contractor’s option, all air devices may be provided with factory insulation in lieu of field applied insulation. If factory option is utilized, the back of all ceiling diffusers shall have factory applied foil faced, R-6 insulation formed to fit the contour of the diffeser back. Insulation shall be continuously glues and sealed around the outer perimeter of the outer cone to form a continuous vapor seal. The contractor shall seal the insulation on the supply duct at the connection to the diffuser to form a continouos vapor seal at the duct connection. Approved duct sealant or foil faced duct dape may be used.

I. Acceptable manufacturers are Titus, Carnes, Metalaire, Price, and Nailor.

2.10 FIRE DAMPERS

A. Provide factory fabricated dampers constructed in accordance with SMACNA "Fire Damper and Heat Stop Guide". All dampers shall be of the dynamic type, capable of closing when the HVAC system is still running, and rated for closure to 2000 FPM and 4 inches W.G. static pressure.

B. Provide fire dampers, of types and sizes indicated. Construct casings of 11 gauge galvanized steel. Provide fusible link rated at 160-165°F (71-74°C) unless otherwise indicated. Provide damper with positive lock in closed position, and with the following additional features:

1. Damper Blade Assembly: Multi-blade type.
2. Blade Material: Steel, match casing.

C. Available Manufacturers: Subject to compliance with requirements, manufacturers offering fire dampers which may be incorporated in the work include, but are not limited to, the following:

Ruskin Mfg. Co.
Air Balance, Inc.
Arrow Louver and Damper Corp.
Greenheck

2.11 SMOKE AND FIRE/SMOKE DAMPERS

A. Smoke and combination Fire/Smoke dampers shall be provided with an actuator tested and installed in accordance with UL specific for this application, UL555S Listing for 350F (250F) and shall drive open in 15 seconds and spring closed in 15 seconds at elevated temperature. Belimo FSNF 120 Actuators are approved for use with Ruskin dampers. Alternate manufacturers shall submit UL approval with shop drawings for approval.

B. Provide dampers, of types and sizes indicated.

C. Available Manufacturers: Subject to compliance with requirements, manufacturers offering fire dampers which may be incorporated in the work include, but are not limited to, the following:

Ruskin Mfg. Co.
Air Balance, Inc.
Arrow Louver and Damper Corp.
Greenheck

PART 3 - EXECUTION

3.1 GENERAL

A. Install all system components such as air devices, dampers, etc. is in accordance with manufacturer's installation instructions.

B. Install duct mounted devices furnished by Owner and other trades, such as , control dampers, instrumentation, etc. Meet and comply with manufacturer's installation instructions.

C. Ductwork, diffusers, registers, grilles and other items of the air handling system shall not be supported by the ceiling or ceiling suspension system.

D. The weight of ductwork and accessories shall not be supported by the equipment. Provide additional supports to the floor and/or building structure as required to relieve such weight.

E. Set all equipment properly leveled and aligned with associated ductwork. Do not use the flexible connectors as a method of correcting misalignments or support of any equipment of duct weight.

F. Coordinate location of grilles, wallcaps, roofcaps, louvers, and diffusers with electrical, architectural, and plumbing work. The bottom elevation of exposed ducts shall be coordinated with the Architect.

G. All damper motors or actuators shall be mounted to be fully accessible. Provide extension shafts, if required.

H. The back side of all louvers which are not used for outside air intake or exhaust shall be blanked off with galvanized sheet metal and insulated with two inch thick rigid board insulation, installed in accordance with the manufacturer’s installation instructions.

3.2 INSTALLATION OF DUCTWORK

A. Install all ductwork is in accordance with applicable SMACNA Manual. Ductwork shall be installed and tested to less than 2% leakage. Duct leakage tests shall be conducted in accordance with ASHRAE Standard 126-2008, Method of Testing HVAC Air Ducts.

B. Provide hangers, reinforcing and supports is in accordance with applicable SMACNA Manual.

C. Duct dimensions shown on drawings are clear inside dimensions.

D. Duct dimensions may be changed to meet field conditions, as hereinbefore specified.

E. Maintain full free interior duct areas and suitable shapes at all points.

F. Conceal all ductwork is in finished spaces, unless otherwise indicated.

G. Drawings do not show all transitions and offsets which may be required. Install all necessary transitions and offsets to complete system.

H. Duct turns located near a fan discharge shall always be is in the direction of fan rotation. Installer shall coordinate arrangement of fan section to assure this condition is met.

I. Electrical Equipment Spaces: Do not run ductwork through transformer vaults and their electrical equipment spaces and enclosures.

3.3 INSTALLATION OF FIBROUS DUCTBOARD

A. Verify that the duct system may be installed in accordance with project drawings, operating performance parameters, limitations and standards published in NAIMA.

B. Straight duct sections and fittings shall be fabricated in accordance with NAIMA, using proper machinery, tools and techniques.

C. Flaps on all field joints shall be stapled approximately two inch (2”) (50 mm) on centers with one half inch (1/2”) (13mm) (min) outward clinching steel staples near the edge of the flap. On fitting joints where stapling flaps cannot be included as part of the construction, tape tabs eight inch (8”) (200 mm) (min) in length shall be used. Tabs shall be centered over the joint, a minimum of one tab per duct side and/or twelve (12”) (300 mm) (max) on centers.

D. On field joints, all taping surfaces shall be wiped clean before sealing. If the surace is contaminated with grease or oil, it shall be cleaned with a solvent recommended by the tape manufacturer.

E. Pressure-sensitive tape shall be firmly rubbed in place immediately after application using a “squeegee” type tool. When the duct surface temperature is below 50°F (10°C), a heat-sealing tool shall be used on pressure-sensitivetapes to assure bonding.

F. Heat-activated tape shall be sealed down with an iron (do not use a heat gun) using a smearing action. Colored dots on tape surface shall become darkened, indicating that satifactory bonding temperature has been reached. Allow joint to cool before stressing.

G. Mastic shall be brushed onto joint and glass fabric imbedded in it. A second coat of mastic shall be brushed over the glass fabric until the fabric is filled. Mastics shall be applied in accordance with application instructions on the container.

H. Mechanical fasteners of the types shown in NAIMA shall be used to connect the duct board to the sheet metal before application of closure material.

3.4 FLEXIBLE DUCTS

A. Flexible duct installation shall follow requirements shown on pages 3-13 through 3-20 and Figures 38, 3-9, and 3-I0 of the Manual.

B. Is in order not to exceed the maximum length of flexible duct allowed by these specifications, installer shall provide the necessary length of equivalent diameter sheet metal duct required for the installation.

3.5 SPIN-IN FITTING

A. Install components is in accordance with manufacturer's installation instructions.

B. Provide a bead of duct sealer compound around duct opening before installation of fittings.

C. Fittings shall not be installed back to back or adjacent to each other. Provide a minimum of four feet (4') between branch take-offs.

3.6 DUCT HANGERS AND SUPPORTS

A. All ducts shall be properly hung and supported is in accordance with Chapter 5 of the Manual. Spacing between hangers shall not exceed the maximum values shown on indicated tables of applicable Manual.

B. Provide additional hangers as necessary for the proper support of control dampers and any related equipment.

C. Installer shall be familiar with building structure and provide additional steel members when necessary for the proper support of equipment.

D. No welding or cuffing of building structural members shall be permitted without the written approval of the Structural Engineer.

E. All supports shall be from the building structure.

F. Provide additional hangers on both sides of ducts penetrating fire rated walls. Hangers shall be located within 18" of wall. No ductwork shall be supported from any fire rated wall.

G. On insulated ducts, hangers shall be attached directly to the ducts and be covered by insulation.

3.7 FIBROUS DUCTBOARD HANGERS AND SUPPORTS

A. The duct system shall be supported in accordance with the provisions of NAIMA.

B. All hangers, supports and attachments to the structure must be capable of withstanding three times the anticipated load.

C. All straight ducts and fittings shall be reinforced to prevent ballooning, collapsing, or sagging using either the formed sheet metal system or the tie rod system in accordance with the provisions of Section 5 of NAIMA. Tie rod washers shall be two and one half inch (2-1/2") (64 mm) square or three inch (3") (76 mm) diameter and shall be made of plated or galvanized sheet metal of at least 0.028" (0.7 mm) thickness, with turned edges to prevent cutting into the facing of the duct board. The hole size shall be approximately 0.150" (4 mm) to allow the tie rod to move freely through the washer.

D. To prevent sagging of top panels of supply ducts over forty-eight (48") (1.2m) wide reinforce with formed sheet metal channel, #10 plated sheet metal screws shall be installed with two and one half inch (2-1/2") (64 mm) square or three inch (3") (76 mm) diameter plated or galvanized steel washers inside the duct on the longitudinal centerline of the duct. When the tie rod reinforcement is used, sag support shall consist of one half inch (½") (13mm) rigid galvanized steel conduit and two and one half inch (2-1/2") (64 mm) square or three inch (3") (76 mm) diameter plated or galvanized steel washers inside the duct on the longitudinal centerline three inch (3") (76 mm) from the male shiplap edge.

E. For all negative pressure systems, refer to NAIMA for proper spacing of reinforcement and proper attachment to the duct board.

F. Doors, coils, dampers, registers, grilles, diffusers, turning vanes, volume extractors, and other accessory items shall be installed as detailed in NAIMA with adequate reinforcement and support to accommodate additional weight without damage to the duct board. Dampers over two (2) square feet (0.2m^2) shall be supported by sheet metal sleeves with all moving parts shielded with galvanized sheet metal at abrasion points. All 90-degree elbows shall contain turning vanes spaced at three inch (3") (76 mm) (max) intervals, mounted in accordance with turning vane manufacturer's instructions. Turning vanes shall not be considered as reinforcing members. If volume extractors or splitter dampers are required on side take-off and split duct connections, they shall be fabricated using appropriate hardware. Slip-in electric heating coils shall be supported independently of the duct system and shall be installed in galvanized sheet metal sleeves extending six inch (6") (152 mm) (min) on both sides of the coils. Connection of accessory items shall be made to the duct system using two and one half inch (2-1/2") (64 mm) square or three inch (3") (76 mm) diameter galvanized or plated steel washers to spread the load to the duct board.

3.8 CLEANING

A. As installation of ductwork progresses, remove temporary interior braces put is in place during construction.

B. All scraps of metal and insulation and other debris shall also be removed from interior of ducts.

C. Clean ductwork internally, unit-by-unit as it is installed, of dust and debris. Clean external surfaces of foreign substances which might cause corrosive deterioration of metal or, where ductwork is to be painted, might interfere with painting or cause paint deterioration.

D. Remove all grease and dust from exterior of ducts prior to installation of insulation.

E. Paint inside of ducts visible through grilles and registers with one coat of dull black paint.

F. At completion of work prior to final acceptance, clean interior of all work installed under this section.

G. Strip protective paper from stainless steel ductwork surfaces, and repair finish wherever it has been damaged.

H. Temporary Closure: At ends of ducts which are not connected to equipment or air distribution devices at time of ductwork installation, provide temporary closure of polyethylene film or other covering which will prevent entrance of dust and debris until time connections are to be completed.

3.9 START UP

A. Refer to Division 23 section "Testing, Adjusting and Balancing" for air distribution balancing. Seal any leaks in ductwork that become apparent in balancing process.

B. Replace all temporary filters used during construction with new, clean filters of the type specified for the project.

END OF SECTION 23 30 00

SECTION 23 34 00

HVAC FANS

PART 1 - GENERAL

1.1 RELATED DOCUMENTS

A. The Bidding Requirements and Contractual Conditions set forth in Division 01 apply to this section.

B. Examine other sections of the Project Manual for requirements which affect work of this section whether or not such work is specifically mentioned in this section.

C. The requirements of Section 230000 - HVAC apply to this section.

1.2 DESCRIPTION OF WORK

A. Extent of power and gravity ventilator and exhaust fan work is shown on drawings and schedules, and by requirements of this section.

B. Types of power and gravity ventilators and exhaust fans required for project include the following:

1. Power Ventilators and Exhaust Fans:
   Centrifugal roof ventilators and exhaust fans.
2. Gravity ventilators:
   Hooded gravity ventilators.

C. Refer to Division 26 sections for electrical work required in conjunction with power ventilators and exhaust fans.

1.3 QUALITY ASSURANCE

A. Firms regularly engaged in the manufacture of power and gravity ventilators and exhaust fans, of types and sizes required, whose products have been in satisfactory use in similar service for not less than 5 years.

B. Provide power roof ventilators and exhaust fans bearing the Air Movement and Control Association, Inc. (AMCA) Certified Ratings Seal.

C. Provide power roof ventilator and exhaust fans electrical components which have been listed and labeled by Underwriters Laboratories (UL).

1.4 SUBMITTALS

A. Submit manufacturer's data for power and gravity ventilators and exhaust fans, including specifications, capacity ratings, dimensions, weights, materials, accessories furnished, and installation instructions.

B. Submit maintenance instructions, including lubrication instructions, motor and drive replacement, and spare parts lists. Include this data in maintenance manuals.

PART 2 - PRODUCTS

2.1 POWER ROOF VENTILATORS

A. General: Except as otherwise indicated, provide standard pre-fabricated power ventilator and exhaust fan units of type and size indicated, modified as necessary to comply with requirements, and as required for complete installation.

B. Centrifugal Roof Ventilators and Exhaust Fans: Provide centrifugal roof type, curb mounted, power ventilators and exhaust fans of type, size, capacity, with options and accessories, as scheduled, and as specified herein.

1. Type: Centrifugal fan, direct or belt driven, upblast or downblast, as scheduled. Provide aluminum weatherproof housings as scheduled. Provide square base. Provide permanent split-capacitor type motor for direct driven fans; capacitor-start, induction-run type motor for belt driven fans.
2. Electrical: Provide thermal overload protection in fan motor. Provide conduit chase within unit for electrical connection. Provide disconnect switches, external type for the kitchen hood fan.
3. Curbs: Provide insulated metal curbs with cants to fit base of roof ventilator, height as indicated (minimum 14 inches), and type to suit roof construction. Provide slanted roof curb for kitchen hood fan that meets NFPA codes. Kitchen exhaust air fans shall terminate a minimum 40 inched above the adjacent roof surface.
4. Bird Screens: Provide removable bird screens, 1/2" mesh, 16 ga. aluminum or brass wire.
5. Dampers: Provide gravity-actuated louvered dampers in curb bases except for kitchen hood exhaust fan.
6. The kitchen hood exhaust fan shall be provided with an extended base and grease trough.

C. Acceptable Manufacturers: Greenheck Fan Corp., Acme, Carnes Co., Cook (Loren) Co., Penn

2.2 CEILING EXHAUST AIR FANS

A. Provide ceiling mounted exhaust fans of type, size and capacity as scheduled, and as specified herein.

1. Provide insulated steel housing with baked enamel finish and adjustable mounting brackets. Provide centrifugal type blower with direct drive motor. Fan rpm, air delivery and sound shall be no greater than those listed for each model. Fans shall be UL approved and bear AMCA label for both air performance and sound. Motors shall be mounted with neoprene mounts to isolate vibration. Automatic backdraft damper shall be located within duct connector and have cushioned stops to prevent chatter.
2. Provide wall caps or louvers where shown and/or required as shown on the drawings.

B. Acceptable Manufacturers: Greenheck Fan Corp., Acme, Carnes Co., Cook (Loren) Co., Penn.

2.3 GRAVITY RELIEF AND INTAKES

A. Fresh Air Intakes: Provide aluminum low profile fresh air intakes of the throat size indicated in the schedule on the plans.

1. Provide aluminum coated curb, 14" high.
2. Provide insect screen around the perimeter of the hood.

1. Ventilator is low silhouette for relief applications with natural gravity or negative pressure system.
2. Selection based on non-ducted applications.
3. Relief units with throat widths through 48 inches are ship assembled when throat lengths do not exceed 96 inches.
4. Each fan shall bear a permanently affixed manufacture's nameplate containing the model number and individual serial number.

B. Hood and Base:

1. Material Type: Aluminum, Galvanized
2. Hood Constructed of precision formed, arched panels with interlocking seams.
3. Vertical end panels are fully locked into hood end panels.
4. Base height is standard of 5 inches.
5. Curb cap is six inches larger then throat size.
6. Curb cap has pre-punched mounting holes for installation.

C. Birdscreen:

1. Constructed of ½ inch Aluminum mesh.
2. Mounted horizontally across the intake area of the hood.

D. Hood Support:

1. Constructed of galvanized steel and fastened so the hood can either be removed. completely from the base or hinged open.

E. Options/Accessories:

1. Roof Curbs:
   a. Mounted onto roof with fan.
   b. Material: Aluminum.
   c. Insulation thickness: 2 inches.
   d. Coating Type: [None] [Permatector] [Hi-Pro Polyester] [Primer]] [Baked Enamel]
2. Extended Base:
   a. Seven inch extension to base height making overall base twelve inches tall.
   b. Raises the hood further above the roof deck to prevent snow or moisture intake.
3. Curb Seal:
   a. Rubber seal between fan and the roof curb
4. Dampers:
   a. Type: Gravity
   b. Prevents outside air from entering back into the building when fan is off.
   c. Balanced for minimal resistance to flow.
   d. Galvanized frames with pre-punched mounting holes.
5. Filters:
   a. Mounted in open end racks for easy removal.
   b. Washable 2 inch aluminum mesh designed to remove contaminants from the air.
6. Finishes:
   a. Type: [None] [Permatector] [Hi-Pro Polyester] [Primer] [Baked Enamel].
7. Hood Insulation:
   a. Lined with 1 inch fiberglass insulation to prevent condensation and sound levels.
8. Insect Screen:
   a. Constructed of fine mesh aluminum.
   b. Fitted to the top of the throat and prevents entry of insects.
9. Tie-Down Points:
   a. Four aluminum brackets located on hood supports, secures fan in heavy wind applications.

PART 3 - EXECUTION

3.1 GENERAL

A. Examine areas and conditions under which power and gravity ventilators and exhaust fans are to be installed. Do not proceed with work until unsatisfactory conditions have been corrected.

3.2 INSTALLATION OF POWER AND GRAVITY VENTILATORS

A. General: Except as otherwise indicated or specified, install ventilators and exhaust fans in accordance with manufacturer's installation instructions and recognized industry practices to insure that ventilators serve their intended function.

B. Coordinate ventilator and exhaust fan work with work of roofing, walls, and ceilings, as necessary for proper interfacing.

C. Ensure that power ventilators and exhaust fans are wired properly, with correct motor rotation, and positive electrical motor grounding.

D. Remove shipping bolts and temporary supports within ventilators and exhaust fans. Adjust dampers for free operation.

3.3 TESTING

A. After installation of ventilators and exhaust fans has been completed, test each to demonstrate proper operation of units at performance requirements specified. When possible, field correct malfunctioning units, and then retest to demonstrate compliance. Replace units which cannot be satisfactorily corrected.

3.4 SPARE PARTS

A. General: Furnish to Owner, with receipt, one (1) spare set of belts for each belt drive power ventilator and exhaust fans.

END OF SECTION 23 34 00

SECTION 23 74 00

AIR CONDITIONING UNITS

PART 1 - GENERAL

1.1 RELATED DOCUMENTS

A. The Bidding Requirements and Contractual Conditions set forth in Division 01 apply to this section.

B. The requirements of Section 230000 - HVAC apply to this section.

C. Drawings and general provisions of Contract, including General and Supplementary Conditions and Division 01 specification sections, apply to work of this section.

1.2 WORK INCLUDED

A. Extent of unit work is indicated by drawings and schedules, and by requirements of this section. Each unit is defined to include (but not by way of limitation) fan and motor, filter section, cooling coil, drip pan, compressor section, thermal insulation; refer to plans for additional requirements.

B. Types of packaged air handling units required for project include the following:

Ductless Wall Mounted Air Conditioners

C. Refer to appropriate Division 26 sections for disconnects and power wiring.

1.3 QUALITY ASSURANCE

A. Manufacturers: Firms regularly engaged in manufacture of packaged air handling units of types and capacities required, whose products have been in satisfactory use in similar service for not less than 5 years.

B. Comply with applicable provisions of ANSI/NFPA 90A, "Air-Conditioning and Ventilating Systems", pertaining to installation of electric heating coils.

C. Comply with applicable provisions of ANSI/NFPA 70 "National Electric Code", pertaining to construction and installation of electrically operated components of packaged units.

D. Except as otherwise indicated, provide unit thermal insulation with flame-spread index of 25 or less, fuel-contributed index of 50 or less, and smoke-developed index of 50 or less.

E. Comply with Air Movement and Control Association (AMCA) standards as applicable to

testing and rating fans, and testing louvers, dampers and shutters.

F. Comply with Sheet Metal and Air-Conditioning Contractors National Association (SMACNA) ductwork construction standards as applicable to air handling units.

G. Provide refrigerant coils complying with construction and testing standards of ANSI/ASHRAE 15 "Safety Code for Mechanical Refrigeration".

H. Except as otherwise indicated comply with ASHRAE recommendations pertaining to packaged air conditioning units.

I. Provide electric components for air handling units which have been listed and labeled by Underwriters Laboratories.

1.4 SUBMITTALS

A. Submit manufacturer's specifications for units showing dimensions, weights, capacities, ratings, fan performance with operating point clearly indicated, motor electrical characteristics, gages and finishes of materials, and installation instructions.

B. Submit assembly-type shop drawings showing unit dimensions, construction details, and field connection details.

C. Submit maintenance instructions, including lubrication instructions, filter replacement, motor and drive replacement, and spare parts lists. Include this data in maintenance manuals.

1.5 PRODUCT DELIVERY, STORAGE AND HANDLING

A. Deliver units with factory-installed shipping skids and lifting lugs; pack components in factory-fabricated protective containers.

B. Handle units carefully to avoid damage to components, enclosures, and finish. Do not install damaged components; replace and return damaged components to unit manufacturer.

C. Store units in clean, dry place and protect from weather and construction traffic.

PART 2 - PRODUCTS

2.1 DUCTLESS WALL MOUNTED AIR CONDITIONERS

A. Provide wall hung ductless or ceiling mounted air conditioning/heat pump unit(s) as shown on the plans.

B. Wireless Remote Control With Large LCD Screen shall permit user to select all functions

and the desired room temperature setting from anywhere in the room.

C. Microcomputer-Controlled System shall constantly monitor time and temperature against pre-set conditions for maximum energy cost savings as well as to ensure correct indoor temperature at all times.

D. Twenty-Four Hour (24) ON/OFF Program Timer shall allow user to set various time based functions.

E. Electric Resistant Back Up Heater shall be provided where schedules are to allow supplementary heat automatically (except 09KHS21).

F. Automatic Defrost Cycle shall prevent coil freeze up during heat pump operation.

G. A full Width Centrifugal Blower shall distribute a quiet, even flow of conditioned air to the room from the indoor evaporator.

H. Auto Louver Mechanism activated by the remote control shall, oscillate the unique air discharge vane up and down to ensure even distribution (Except 09KHS21 and 09KHS22).

I. Heating/Cooling Automatic Changeover shall automatically switch the unit's operation from cooling to heating and vice versa.

J. The Hot Start System shall ensure a comfortable warm airflow even at the beginning of the heating process or during defrost.

K. The Self-Diagnostic Feature shall facilitate maintenance and quick repair by indicating on the PCB's LED where a malfunction or problem occurs.

L. Provide Non Polar Wiring which simplifies installation as only two wires for the signal line are required to connect the indoor and outdoor units together.

M. Provide Washable Filters, removable without tools.

N. Unit(s) shall be ETL, ARI approved.

O. Acceptable Manufacturers: LG, Daikin, Samsung, Panasonic, and Mitsubishi.

PART 3 - EXECUTION

3.1 INSPECTION

A. Examine areas and conditions under which units are to be installed. Do not proceed with work until unsatisfactory conditions have been corrected.

3.2 INSTALLATION OF EQUIPMENT

A. Install units where indicated, in accordance with equipment manufacturer's written instructions, and with recognized industry practices, to ensure that units comply with requirements and serve intended purposes.

B. Coordinate with other work, including ductwork, floor construction, roof decking, and piping, as necessary to interface installation of air handling units with other work. Install units on vibration mounts as indicated, comply with manufacturer's indicated installation method, if any. Provide start up of equipment by the manufacturer’s service technicians

3.3 INSTALLATION OF ROOFTOP UNITS

A. Install units where indicated, in accordance with equipment manufacturer's written instructions, and with recognized industry practices, to ensure that units comply with requirements and serve intended purposes.

B. Coordinate with other work, including ductwork, roof decking, as necessary to interface installation of rooftop units with other work.

C. Install units on 24 inch high roof curb as indicated, comply with manufacturer's indicated installation method, if any. Curb shall be filled with six-inch batt insulation for sound attenuation purposes.

D. Provide start-up of equipment by the manufacturer’s factory certified service technicians.

3.4 GROUNDING

A. Provide positive equipment ground for air handling unit components.

3.5 TESTING

A. Upon completion of installation of units, start-up and operate equipment to demonstrate capability and compliance with requirements. Field correct malfunctioning units, then retest to demonstrate compliance.

3.6 TRAINING OF OWNER'S PERSONNEL

A. Provide services of manufacturer's technical representative for 4-hours to instruct Owner's personnel in operation and maintenance of the equipment.

B. Schedule training with Owner, provide at least 7-day notice to Contractor and Engineer of training date. Obtain receipt that training has been accomplished.

END OF SECTION 23 74 00

SECTION 23 81 26

UNITARY AIR HANDLING UNITS

PART 1 - GENERAL

1.1 RELATED DOCUMENTS

A. The Bidding Requirements and Contractual Conditions set forth in Division 01 apply to this section.

B. Examine other sections of the Project Manual for requirements which affect work of this section whether or not such work is specifically mentioned in this section.

C. The requirements of Section 230000 - HVAC apply to this section.

1.2 WORK INCLUDED

A. Extent of air handling unit work is indicated by drawings and schedules, and by requirements of this section. Each unit is defined to include (but not by way of limitation) fan and motor, filter section, cooling coil, drip pan, thermal insulation; refer to plans for additional requirements.

B. Types of packaged air handling units required for project include the following: Indoor draw-through.

C. Refer to appropriate Division 26 sections for disconnects and power wiring.

1.3 QUALITY ASSURANCE

A. Manufacturers: Firms regularly engaged in the manufacture of packaged air handling units of types and capacities required, whose products have been in satisfactory use in similar service for not less than 5 years.

B. Comply with applicable provisions of ANSI/NFPA 90A, "Air-Conditioning and Ventilating Systems", pertaining to installation of electric heating coils.

C. Comply with applicable provisions of ANSI/NFPA 70 "National Electric Code", pertaining to construction and installation of electrically operated components of packaged air handling units.

D. Except as otherwise indicated, provide air handling unit thermal insulation with flame-spread index of 25 or less, fuel-contributed index of 50 or less, and smoke-developed index of 50 or less.

E. Comply with Air Movement and Control Association (AMCA) standards as applicable to testing and rating fans, and testing louvers, dampers and shutters.

F. Except where more stringent limitation is indicated, provide dampers with leakage limited to 20 CFM/ SQ FT., at 4" WG.

G. Comply with Sheet Metal and Air-Conditioning Contractors National Association (SMACNA) ductwork construction standards as applicable to air handling units.

H. Provide refrigerant coils complying with construction and testing standards of ANSI/ASHRAE 15 "Safety Code for Mechanical Refrigeration".

I. Except as otherwise indicated; comply with ASHRAE recommendations pertaining to packaged air handling units.

J. Provide central station packaged air handling units which comply with Air-Conditioning and Refrigeration Institute (ARI) Standard 630 and display ARI's certification symbols.

K. Provide electric components for air handling units which have been listed and labeled by Underwriters Laboratories.

1.4 SUBMITTALS

A. Submit manufacturer's specifications for air handling units showing dimensions, weights, capacities, ratings, fan performance with operating point clearly indicated, motor electrical characteristics, gages and finishes of materials, and installation instructions.

B. Submit assembly-type shop drawings showing unit dimensions, construction details, and field connection details.

C. Submit maintenance instructions, including lubrication instructions, filter replacement, motor and drive replacement, and spare parts lists. Include this data in maintenance manuals.

1.5 PRODUCT DELIVERY, STORAGE AND HANDLING

A. Deliver air handling units with factory-installed shipping skids and lifting lugs; pack components in factory-fabricated protective containers.

B. Handle air handling units carefully to avoid damage to components, enclosures, and finish. Do not install damaged components; replace and return damaged components to air handling unit manufacturer.

C. Store air handling units in clean, dry place and protect from weather and construction traffic.

PART 2 – PRODUCTS

2.1 AIR HANDLING UNITS

A. Provide factory-built and factory-tested air handling units as indicated, of sizes and capacities as scheduled and as specified herein.

B. Construct casings of 16 Ga. Minimum mill galvanized steel, designed to withstand specific operating pressures. Provide casing panels and/or access doors that are easily and quickly removable for inspection and access to internal parts.

1. Provide single zone unit consisting of fan section, coil section, adjustable fan motor mounting and drain pan.
2. Provide reinforced points of support for either setting or hanging units.
3. Provide drain pan, located under cooling coil section, extensive enough to catch condensate leaving coil at highest catalogued face velocity. Provide at least 1 drain connection at low point in drain pan.
4. Cover casing and frame with protective finish on both sides.

C. Provide cooling coils of scheduled capacity, mounted in unit in manner permitting/removal. Construct coils with copper tubing and aluminum fins bonded to tubes by method approved by specified manufacturer. Coils shall be ARI rated.

D. Design internal structure of coil section to allow for removal of coils, and provide suitable baffles to assure no air bypass around coils. Provide condensate pans and drain connections to cooling coil sections of sufficient size to contain and remove coil condensate. Insulate coil section casings and drain pans.

E. Provide forward curved fans as specified, specifically designed and suitable for class or service indicated. Provide adjustable motor base, adjusted with mounted bolts, to provide variation in center distance. Provide locking nuts, or similar devices; to secure base in proper position. Provide belt driven fans with adjustable pitch pulley permitting fan speed to be varied. Select pulley for mid-point of adjustable range. Design fan shafts so as not to pass through first critical speed when unit comes up to rated RPM. Provide grease lubricated fan bearings with externally accessible fittings for lubrication. Statically and dynamically balance fan assemblies in the fan housing after the final assembly. Refer to plans for additional requirements.

F. Insulate unit casing from air entrance to coils, to air outlet from unit. Insulate framing angles exposed to air stream. Securely attach insulation, of sufficient thickness and density to prevent condensation from forming on unit casing. Provide insulation with fire-retarding characteristics, complying with ANSI/NFPA 90A. Insulate drain pans as required to prevent condensate formation on unit exterior at ambient conditions to be encountered.

G. Provide permanent metal frames for disposable type filter media.

H. Available Manufacturers: Subject to compliance with requirements, manufacturers offering air handling units which may be incorporated in the work include, but are not limited to, the following: Lennox, Daikin, Carrier, York, Goodman, and Trane.

PART 3 - EXECUTION

3.1 INSPECTION

A. Examine areas and conditions under which air handling units are to be installed. Do not proceed with work until unsatisfactory conditions have been corrected.

3.2 INSTALLATION OF AIR HANDLING UNITS

A. Install air handling units where indicated, in accordance with equipment manufacturer's written instructions, and with recognized industry practices, to ensure that units comply with requirements and serve intended purposes.

B. Coordinate with other work, including ductwork, floor construction, roof decking, and piping, as necessary to interface installation of air handling units with other work.

C. Install units on vibration mounts as indicated, comply with manufacturer's indicated installation method, if any.

3.3 GROUNDING

A. Provide positive equipment ground for air handling unit components.

3.4 TESTING

A. Upon completion of installation of air handling units, start-up and operate equipment to demonstrate capability and compliance with requirements. Field correct malfunctioning units, then retest to demonstrated compliance.

3.5 TRAINING OF OWNER'S PERSONNEL

A. Provide services of manufacturer's technical representative for four 4-hours to instruct Owner's personnel in operation and maintenance of the air handlers.

B. Schedule training with Owner, provide at least 7-day notice of training date. Obtain receipt that training has been accomplished.

END OF SECTION 23 81 26

SECTION 23 81 27

AIR COOLED CONDENSING UNITS

PART 1 - GENERAL

1.1 RELATED DOCUMENTS

A. The Bidding Requirements and Contractual Conditions set forth in Division 01 apply to this section.

B. Examine other sections of the Project Manual for requirements which affect work of this section whether or not such work is specifically mentioned in this section.

C. The requirements of Section 230000 - HVAC apply to this Section.

1.2 WORK INCLUDED

A. Provide factory-fabricated and factory-assembled, one piece air cooled condensing units of size and capacity as indicated on the drawings and schedules, and by requirements of this section.

B. Each unit shall be furnished complete with air cooled condenser section, condenser fan sections, compressor motors, reciprocating or scroll type compressors, refrigerant cooler, refrigerant charge, complete refrigerant circuit controls and control panel, all factory assembled on a common steel framework. Provide single point electrical connection with W.P. switch.

C. Refer to Division 26 sections for field installed electrical wiring required for each air cooled unit.

1.3 QUALITY ASSURANCE

A. Firms regularly engaged in the manufacture of air cooled condensing units, of types, materials and sizes required, whose products have been in satisfactory use in similar service for not less than 5 years.

B. Comply with applicable ANSI/ASHRAE Standards pertaining to products and installation of air cooled condensing units.

C. Comply with applicable ARI Standards pertaining to products and capacities of air cooled condensing units.

D. Provide electrical components required as part of factory-fabricated air cooled condensing units, which have been listed and labeled by Underwriters Laboratories and comply with NEMA Standards.

E. Comply with National Electrical Code (ANSI/NFPA 70) as applicable to installation and electrical connections of ancillary electrical components of factory-fabricated air cooled condensing units.

F. Guarantee: Provide five year guarantee on all compressors.

1.4 SUBMITTALS

A. Submit manufacturer's specifications, including parts list, rated capacities, pressure drop, dimensions, weights (shipping, installed, and operating), installation and start-up instructions, and rating curves with selected points clearly indicated, complete wiring diagrams and any other information necessary to the proper installation and operation of each unit.

B. Submit assembly-type shop drawings indicating dimensions, weight loadings, required clearances, and methods of assembly of components.

C. Submit ladder-type wiring diagrams for motors and control components, clearly indicating all required field electrical connections.

D. Submit maintenance data and parts list for each air cooled condensing unit. Include "trouble-shooting" maintenance guide. Include this data in maintenance manual.

E. Submit required certifications and written tests results for required testing.

1.5 DELIVERY, STORAGE, AND HANDLING

A. Rig each air cooled condensing unit to its final location under supervision of a manufacturer's representative, who shall approve entire rigging operation.

PART 2 - PRODUCTS

2.1 MATERIALS

A. Factory fabricate air cooled condensing unit using manufacturer's standard design, materials, and construction in accordance with published product, information, except as otherwise indicated.

B. Design structural system for the live loading in addition to dead-loads and operating-loads.

2.2 CONDENSING UNITS

A. DX type coils with the following features:

1. Aluminum fins.
2. Multiple, independent direct expansion refrigerant circuits, where noted on the plans.
3. Maximum air friction drop = .40" W.G.
4. Factory pressure tested, dehydrated and supplied with the proper refrigerant charge or nitrogen holding charge.

B. Each refrigerant circuit shall be factory supplied and piped and shall have the following components:

Hot gas muffler for reciprocating compressors over five tons
High and low pressure cutouts
Suction and Liquid line shut-off valve
Refrigerant filter drier
Moisture indicating sight glass
Liquid line solenoid valve
Thermal expansion valve
Integral subcooling provisions
Low ambient control (20 F)

C. Each compressor shall be reciprocating or scroll type and shall have the following features:

1. Hermetic.
2. Automatic reversible oil pump, if required by manufacturer
3. Equipped with suction and discharge shutoff valves.
4. Isolated from condensing unit assembly with vibration isolators.
5. Motor cooled by refrigerant suction gas passing around the motor windings and shall have over-temperature protection.
6. Manual restart of each motor after motor stoppage due to thermal overload.
7. Each compressor equipped with insertion type crankcase heater.
8. Factory installed contactor and a calibrated manual reset, ambient insensitive overload protector. It shall open all 3 phases in the event of overload in any one place.
9. Forced fed lubrication.
10. Each compressor motor unit shall have a five year warranty.

D. Provide the following features:

1. Condenser coil constructed of aluminum fins mechanically bonded to copper tubing and shall be protected with removal coil guards.

2. Sub-cooling circuit with liquid accumulator, factory tested underwater to 420 psig air pressure.
3. Condenser fans shall be vertical discharge, statically and dynamically balanced, permanently lubricated ball bearings with built-in thermal overload protection.

E. Controls are to be factory or field wired, assembled in a weatherproof enclosure and shall incorporate the following features:

1. Control for cycling compressors.
2. Hot gas bypass controls, if specified.
3. Positive acting timer to prevent short cycling of compressors and to delay restart of compressors after shutdown.
4. Fan cycling controls to maintain condensing pressure at partial loads and at low outdoor air temperatures.
5 Auxiliary switch in timer to prevent nuisance trip-out during winter start-up.
6. An electronic ground current sensing device to monitor fault current caused by refrigerant contaminants. Device shall stop respective compressor.

F. Provide a Rawal APR Control Device. The Rawal devise employs a patented de-superheat chamber to allow hot gas to be passed into the suction line prior to the compressor. The APR Control responds to pressure changes in the suction line thereby controlling the flow of refrigerant in the system. Suction pressure relates directly to the heat content of the air; and allows the APR enhanced systems to respond quickly to provide close temperature control, while maintaining the system in a dehumidifying mode.

G. Subject to compliance with requirements, manufacturers offering air cooled condensing units which may be incorporated in the work include the following: Lennox, Daikin, Carrier, York, Goodman, and Trane.

PART 3 - EXECUTION

3.1 DELIVERY

A. The condensing unit shall be factory assembled to the maximum practical extent. Items subject to damage in transit or affecting transit clearances are to be shipped separately.

3.2 INSTALLATION

A. Condensing units shall be installed and started in accordance with the manufacturer's written instructions and as indicated on the drawings.

B. Condensing units shall be set on vibration isolators.

C. Prior to the equipment start-up, the manufacturer of the condensing units shall provide the services of a factory trained engineer to visit the site and inspect the installation to determine if the equipment has been installed in accordance with the manufacturer's recommended installation procedures. He shall advise the Owner in writing of any recommended corrective action that is required to meet the manufacturer's recommended installation procedures.

D. Manufacturer shall provide a factory trained service engineer to supervise leak testing, evacuation and dehydration using a high vacuum pump furnished by the manufacturer, charging the unit, start-up and instruction of Owner's personnel on operation and maintenance.

END OF SECTION 23 81 27

SECTION 260100

BASIC ELECTRICAL REQUIREMENTS

PART 1 – GENERAL

1.1 RELATED DOCUMENTS

A. Drawings and general provisions of the Contract, including General and Supplementary Conditions and Division-01 Specification Sections, apply to this Section.

B. Coordination of work between mechanical and electrical trades is covered in Division-23 Section “GENERAL MECHANICAL PROVISIONS”.

1.2 SUMMARY

A. This Section specifies the basic requirements for electrical installations and includes requirements common to all sections of Division-26. It expands and supplements the requirements specified in sections of Division-01.

1.3 GENERAL REQUIREMENTS

A. Provide all labor, materials, equipment, and incidentals required to make ready for use complete electrical systems as specified herein and shown on the drawings.

B. Provide and Install: The word "provide" where used on the Drawings or in the Specifications shall mean "furnish, install, mount, connect, test, complete, and make ready for operation". The word "install" where used on the Drawings or in the Specifications shall mean "mount, connect, test, complete, and make ready for operation". Perform work required by, and in accordance with the Contract Documents.

C. Installation: Provide and place in satisfactory condition, ready for proper operation, raceways, wires, cables, and other material needed for all complete electrical systems required by the Contract Documents. Additional raceways and wiring shall be provided to complete the installation of the specific equipment provided. Include auxiliaries and accessories for complete and properly operating systems. Provide electrical systems and accessories to comply with the NEC, state and local codes and ordinances. It is the intent of these Specifications that the electrical systems be suitable in every way for the use intended. Material and work which is incidental to the work of this Contract shall be provided at no additional cost to the Contract.

D. Field Connections: Provide field connections to remote equipment and control panels provided under other Divisions of these Specifications. Provide raceway, wire, and interconnections between equipment, transmitters, local indicators, and receivers. Provide 120V and low voltage surge protection equipment in accordance with Section 16709 at equipment as required. Install field connections to "packaged" equipment provided under other Divisions of these Specifications.

1.4 CODES AND STANDARDS

A. Install all work in accordance with the applicable requirements of the latest edition of the following codes, as adopted by the local and state authorities:

1. Florida Building Code, 2017, 6th Edition.
2. National Fire Protection Association (NFPA).`
3. National Electric Code (NFPA 70 - NEC), 2014 Edition.
4. Life Safety Code (NFPA 101).
5. National Electrical Safety Code (NESC)
6. Florida Fire Prevention Code 2017, 6th Edition.
7. Local, State, County and City Codes.
8. American National Standards Institute (ANSI).
9. Physically Handicapped (ANSI A117.1).
10. Illuminating Engineering Society (IES).
11. Institute of Electrical and Electronics Engineers (IEEE).
12. National Electrical Manufacturer's Associations (NEMA).
13. Occupational Safety and Health Act (OSHA).
14. Underwriter's Laboratories, Inc. (UL).

B. It is the intent of the Contract Documents to comply with the applicable codes, ordinances, regulations, and standards. Contractor shall be skilled and familiar with all codes listed in Paragraph "A". Contractor shall be familiar with the Construction Documents during the pricing and bidding process. Where discrepancies between code requirements and the Construction Documents occur, the most stringent requirements shall apply. The Contractor shall price and provide the item in question accordingly, and notify the Architect / Engineer in writing, through proper channels. If discrepancies occur between different codes, see Paragraph "F". Obvious code deficiencies (code items that do not require further calculations) shall be priced for installation in compliance with the code. It is the responsibility of the Contractor to provide working, and ready for use complete electrical system. Correct any installation that fails to comply with the applicable codes and standards at no additional cost to the Owner.

C. All materials shall be new and free of defects, and shall be U.L. listed, bear the U.L. label or be labeled, or listed with an approved, nationally recognized Electrical Testing Agency. Where no labeling or listing service is available for certain types of equipment, test data shall be submitted to prove to the Engineer and Authority Having Jurisdiction (AHJ) that equipment meets or exceeds available standards.

D. Comply with regulations and codes of suppliers of utilities.

E. Where no specific method or form of construction is called for in Contract Documents, the Contractor shall comply with code requirement when carrying out such work.

F. Where code conflict exists, generally the most stringent requirement applies.

1.5 PERMITS AND INSPECTIONS

A. Contractor shall obtain and make all payments for permits and inspections required. At the completion of the project and before final acceptance of the electrical work, provide evidence of final inspection and approval by the authorities having jurisdiction.

1.6 RECORD DOCUMENTS

A. Refer to the Division-01 Section: PROJECT CLOSEOUT or PROJECT RECORD DOCUMENTS for requirements. The following paragraphs supplement the requirements of Division-01.

B. During the progress of the work the Contractor shall record on their field set of Drawings the corrections, variations, and deviations for systems which are not installed exactly as shown on the Contract Drawings. Mark Drawings to indicate revisions to conduit size and location both exterior and interior; actual equipment locations, distribution and branch electrical circuitry; fuse and circuit breaker size and arrangements; support and hanger details.

C. Make entries within 24 hours upon receipt of information from field. Current set of marked Record Drawings shall be available to Architect or Engineer at all times.

D. Mark Specifications to indicate approved substitutions, changes, actual equipment, and materials used.

E. At the completion of all work, Contractor shall obtain the most current set of Construction Drawings in AutoCAD / Revit format, and transfer and update the drawings to match the exact installed conditions. Label each drawing “RECORD DRAWINGS” with date of final acceptance and completion. Obtain most current set of Specifications in word format and transfer and update Specifications. Label “Record Specifications on front cover and table of contents. Provide final Record Drawings in DWG and PDF format, and final Record Specifications in word and PDF format, and deliver in digital format on portable hard drive. Provide two hard drives to the Owner, and one hard drive to the Engineer.

F. Contractor shall provide record drawings of the actual installation to the building owner, within 30 days after the date of system acceptance. Record drawings shall also include:

1. A single-line diagram of the building electrical distribution system
2. Floor plans indicating location and area served for all distribution

1.7 OPERATION AND MAINTENANCE DATA

A. Refer to the Division-01 Section; PROJECT CLOSEOUT or OPERATION AND MAINTENANCE DATA for procedures and requirements for preparation and submittal of maintenance manuals.

B. Contractor shall provide to the Owner or its representative thorough instructions and training for operation of all installed electrical systems. Coordinate arrangements, timing, and any specialty systems requirements with the Owner and the Engineer. For any training provided by the equipment factory representative, the contractor shall plan and price at least three days' worth of training, unless the current industry standard demands more time, or specifically coordinated with the Owner or the Engineer. Training sessions shall be recorded digitally with video camera. The intent of this paragraph is to provide the owner with satisfactory and complete training, and equipment documentation which allows the Owner to feel comfortable operating the equipment and able to perform maintenance and regular programming. After initial training is completed, the Contractor shall verify with the Engineer that the intent of this paragraph is satisfied. Depending on the quality and the duration of the initial training, and at Engineer's judgement, the Contractor may be directed to provide additional training sessions at no extra charge to the Owner.

C. Provide manuals for all electrical systems. Provide one hard copy (sets bound in binders) and four digital copies (external hard drive) to the owner, and one digital copy to the Engineer. Manuals shall be neat, with sections, divided and indexed. Information shall include:

1. Purpose and detailed description of electrical system
2. Detailed description of operation, including start-up, running, required action, programming (if applicable), shut-down procedures.
3. Specifications sheets for all equipment pieces within the electrical system
4. Submittal data stating equipment rating and selected options for each piece of equipment requiring maintenance
5. Wiring diagrams
6. Installation requirements
7. Operation manuals and maintenance manuals for each piece of equipment requiring maintenance. Required routine maintenance actions shall be clearly identified
8. Common care
9. Instructions for ordering spare parts
10. Names and addresses of at least one qualified service agency, within reasonable distance from the Owners site.
11. Guarantees and factory Warranty

1.8 TEMPORARY POWER

A. Provide and pay for all temporary electrical service as required for construction.

B. Provide all temporary lighting and power distribution as required for construction. All temporary electrical work shall be in accordance with the N.E.C.

1.9 ELECTRONIC FILES

A. AutoCAD / REVIT files will be available on a limited basis to qualified firms at the Architects prerogative. The cost of the files will be $100 per sheet. Recipients are cautioned that these files may not accurately show actual conditions as constructed. Users are responsible to verify actual field conditions. These files are not intended to be used as shop drawings.

B. A request for CADD files should be delivered in writing along with payment for such files. Files will not be processed until payment is received.

PART 2 - PRODUCTS

2.1 QUALITY ASSURANCE

A. Manufacturers: Firms regularly engaged in manufacture of electrical products specified, whose products have been in satisfactory use in similar service for not less than 5 years.

B. Installer's Qualifications: Firm with at least 5 years of successful installation experience on projects with electrical work similar to that required for this project.

2.2 Equipment and Materials:

A. All materials shall be new and unused, Owner-supplied, or reused as shown on the Drawings, the best of their respective kinds, suitable for the conditions and duties imposed on them. The description, characteristics, and requirements of materials to be used shall be in accordance with qualifying conditions established in the following Sections.

B. Equipment and materials furnished under this Division shall be the product of a manufacturer regularly engaged in the manufacture of such items for a period of three years. Where practical, all of the components shall be products of a single manufacturer in order to provide proper coordination and responsibility. Where required, Contractor shall furnish proof of installation of similar equipment or materials.

C. Samples of specific products may be requested by the Owner or by the design team to verify that the item meets the requirements and the intent of the design, as well as aesthetic requirements. Provide samples of products as requested in the Construction Documents. Samples will also be required for product substitutions from basis of design .

D. Each item of equipment shall bear a nameplate showing the manufacturer's name, trade name, model number, serial number, ratings and other information necessary to fully identify it. This plate shall be permanently mounted in a prominent location and shall not be concealed, insulated or painted.

E. All materials shall be new and free of defects, and shall be U.L. listed, bear the U.L. label or be labeled, or listed with an approved, nationally recognized Electrical Testing Agency. Where no labeling or listing service is available for certain types of equipment, test data shall be submitted to prove to the Engineer and Authority Having Jurisdiction (AHJ) that equipment meets or exceeds available standards.

F. Materials and equipment are specified herein by a single or by multiple manufacturers to indicate quality, material and type of construction desired. Manufacturer's products shown on the Drawings have been used as basis for design; it shall be the Contractor's responsibility to ascertain that alternate manufacturer's products meet detailed specifications and that size and arrangement of equipment are suitable for installati

G. Model Numbers: Catalog numbers and model numbers indicated in the Drawings and Specifications are used as a guide in the selection of the equipment and are only listed for the Contractor's convenience. The Contractor shall determine the actual model numbers for ordering equipment and materials in accordance with the written description of each item and with the intent of the Drawings and Specifications.

H. When two or more items of the same material or equipment are required they shall be of the same manufacturer, i.e., panelboards, motor starters, transformers, etc. Product manufacturer uniformity does not apply to raw materials, bulk materials, wire, conduit, fittings, sheet metal, steel bar stock, welding rods, solder, fasteners, motors for dissimilar equipment units, and similar items used in Work, except as otherwise indicated.

I. When ordering products from different systems, but shown on drawings to interact, verify compatibility of products and systems prior to ordering the product.

2.3 PRODUCT OPTIONS AND SUBSTITUTIONS

A. Refer to the Instructions to Bidders and the Division-01 for requirements in selecting products and requesting substitutions.

B. Where several brand names, make or manufacturers are listed as acceptable each shall be regarded as equally acceptable, based on the design selection but each must

meet all specification requirements. Where a manufacturer's model number is listed, this model shall set the standard of quality and performance required. Where no brand name is specified, the source and quality shall be subject to Engineer's review and acceptance. Where manufacturers are listed, one of the listed manufacturers shall be submitted for acceptance. No substitutions are permitted.

C. Requests by Contractor for substitution will be considered only when reasonable, timely, fully documented, and qualifying under one or more of the following circumstances:

1. Specified product cannot be supplied in time for compliance with Contract time requirements.
2. Specified product is not acceptable to governing authority, or determined to be non-compatible, or cannot be properly coordinated, warranted or insured, or has other recognized disability as certified by Contractor.
3. Substantial cost advantage is offered to the Owner after deducting offsetting disadvantages including delays, additional compensation for redesign, investigation, evaluation of substitution product by an Engineer, and other necessary services and similar considerations

D. Prior Approval: Where the term "or approved equal" is used in the Drawings or the Specifications, submit all requests for approval of the alternate manufacturer's products two weeks prior to bid opening. Approval will be in the form of an Addendum to the Specifications and Drawings. Clearly indicate all differences between the specified and proposed product following the guidelines for substitution herein. This requirement may be waived if, by the opinion of the Engineer, it is for the best interest of the Owner.

2.4 SHOP DRAWINGS:

A. Before ordering any materials or equipment, the Contractor shall submit to the Engineer one complete schedule showing the make, type, manufacturer's name and trade designation of all equipment. Submit Specification Sheets, drawings, diagrams, dimensions, descriptive literature, rating, listing, material, finish, warranty, any special mounting accommodations, custom work, etc…for each electrical system. This is digital submittal through the channels to the Engineer.

B. Properly coded stamp from the Engineer on returned submittal is required before ordering equipment. When approved, such schedule shall be an addition to these Specifications, and shall be of equal force in that no deviation will be permitted except with the approval of the Engineer.

C. If shop drawings show variation from the requirements of the Contract Documents, the Contractor shall make specific mention of such variation in his letter of transmittal. If acceptable, Contractor will not be relieved of the responsibility for executing the work in accordance with the Contract.

D. Review of shop drawings, descriptive literature, catalog data, or schedules by the Engineer shall not relieve the Contractor from responsibility for deviations from Contract Drawings or Specifications, unless he has in writing called to the attention of the Engineer such deviation at the time of submission, nor shall it relieve him from responsibility for errors of any sort in shop drawings, descriptive literature, catalog data, or schedules.

E. Submittal of shop drawings, product data, and samples will be accepted only when submitted by the Contractor. Data submitted from subcontractors and material suppliers directly to the Architect/Engineer will not be processed.

F. Coordinate with other division's supplying equipment prior to submitting shop drawings.

G. Electrical Room Drawings: A detailed, 1/4"=1'-0" scaled plan view drawing shall be submitted for each electrical room to ensure that the equipment being supplied will fit properly. This drawing shall make specific mention of any NEC violation. All equipment within the electrical room shall be labeled and actual dimensions shown. The drawings shall be submitted with the shop drawings and manufacturer's product sheets. Failure to supply scaled drawings shall be the basis of rejecting the entire submittal package.

PART 3 – EXECUTION

3.1 WORKMANSHIP

A. All material, fixtures, and equipment shall be installed and completed in a first-class workmanlike manner and in accordance with the best modern methods and practice. Any materials installed which do not present an orderly and reasonably meat and/or workmanlike appearance, or do not allow adequate space for maintenance, shall be removed and replaced when so directed by the Engineer.

3.2 COORDINATION

A. The Contractor shall be responsible for full coordination of the electrical systems with shop drawings of the building construction so the proper openings and sleeves or supports etc., are provided for conduit, devices, or other equipment passing through slabs or walls.

B. Any additional steel supports required for the installation of any electrical equipment, etc., shall provided by the Contractor.

C. It shall be the Contractor's responsibility to see that all equipment that may require maintenance and operation are made easily accessible, regardless of the diagrammatic location shown on the Drawings.

D. All connections to fixtures and equipment shown on the Drawings shall be considered diagrammatic unless otherwise indicated by a specific detail on the Drawings. The actual connections shall be made to fully suit the requirements of each case and adequately provide for servicing. Field verify, and plan proper connections accordingly.

E. The Contractor shall protect equipment and fixtures at all times during storage and construction. Contractor shall replace all equipment and fixtures, which are damaged as a result of inadequate protection.

F. Prior to starting and during progress of work, examine work and materials installed by others as they apply to work in this division. Report conditions, which will prevent satisfactory installation.

G. Start of work will be construed as acceptance of suitability of work of others.

H. The Contractor shall review all equipment being supplied by other divisions prior to ordering electrical equipment. Any conflicts between equipment being supplied and the electronic requirements on the drawings shall be corrected and incorporated into the electrical submittals prior to ordering equipment. Installation of the electrical system is the contractor's acceptance of equipment requirements. Any conflict with equipment's electrical requirements after electrical system has been installed shall be the responsibility of the contractor to make corrective action. Any corrective action shall be at the contractor's expense

3.3 IDENTIFICATION

A. The following equipment shall be provided with nameplates: All motors, motor starters, motor-control centers, pushbutton stations, control panels, time switches, disconnect switches, panelboards, circuit breakers, contactors, lighting switches, power receptacles, existing equipment if being reconnected under this contract.

B. Nameplates shall adequately describe the function of the particular equipment involved. Nameplates for panelboards and switchboards shall include the panel designation, branch (normal or emergency), voltage and phase of the supply. For example, "Panel A, Emergency Branch, 480Y/277V, 3-phase, 4-wire."

C. See Section 260553, Identification for Electrical Systems, for additional requirements.

3.4 ROUGH-IN

A. Verify final locations for rough-ins with field measurements and with the requirements of the actual equipment to be connected, and architectural room elevations.

3.5 ELECTRICAL INSTALLATIONS

A. Coordinate electrical equipment and materials installation with other building

components. Review and coordinate between all construction documents, and all project specifications.

B. Verify all dimensions by field measurements.

C. Arrange for chases, slots, and openings in other building components to allow for electrical installations.

D. Coordinate the installation of required supporting devices and sleeves to be set in poured in place concrete and other structural components, as they are constructed.

E. Sequence, coordinate, and integrate installations of electrical materials and equipment for efficient flow of the Work. Give particular attention to large equipment requiring positioning prior to closing-in the building.

F. Coordinate the cutting and patching of building components to accommodate the installation of electrical equipment and materials.

G. Coordinate connection of electrical systems with local utility services. Comply with requirements of governing regulations, franchised service companies, and controlling agencies. Provide required connections for each service.

H. Branch Circuits: No more than 6 current carrying conductors (3 circuits) shall be installed in any one raceway. 6 current carrying conductors shall consist of 3 circuit conductors and 3 neutral conductors. Provide dedicated neutrals for multiwire branch circuits for compliance with NEC 210.4.

I. Visit the site included in the scope of work to ascertain existing conditions. Verify all dimensions and locations before proceeding with work in the area and prior to purchasing equipment.

J. Locate all underground utilities required by the Sunshine Law prior to proceeding with work.

3.6 CUTTING AND PATCHING

A. This Article specifies the cutting and patching of electrical equipment, components, and materials to include removal and legal disposal of selected materials, components, and equipment.

B. Do not endanger or damage installed Work through procedures and processes of cutting and patching.

C. Arrange for repairs required to restore other work, because of damage caused as a result of electrical installations.

D. No additional compensation will be authorized for cutting and patching work that is necessitated by ill-timed, defective, or non-conforming installations.

E. Perform cutting, fitting, and patching of electrical equipment and materials required to:

1. Uncover Work to provide for installation of ill-timed work;
2. Remove and replace defective Work;
3. Remove and replace Work not conforming to requirements of the Contract Documents;
4. Remove samples of installed Work as specified for testing;
5. Upon written instructions from the Architect/Engineer, uncover and restore Work to provide for Architect/Engineer observation of concealed Work.
6. Install electrical work in existing facilities.

3.7 DELIVERY, STORAGE, AND HANDLING

A. Deliver products to project properly identified with names, model numbers, types, grades, compliance labels, and similar information needed for distinct identifications; adequately packaged and protected to prevent damage during shipment, storage, and handling.

B. Store equipment and materials at the site, unless off-site storage is authorized in writing. Protect stored equipment and materials from damage.

C. Coordinate deliveries of electrical materials and equipment to minimize construction site congestion. Limit each shipment of materials and equipment to the items and quantities needed for the smooth and efficient flow of installations.

D. Owner Furnished Equipment: Coordinate requirements and pricing for services with the owner.

1. Contractor shall be responsible for receipt from the Owner, storage after receipt, and installation if required.
2. Verify equipment connection requirements prior to rough-in and ordering materials.
3. Install equipment in accordance with manufacturer instructions.
4. Maintain equipment until project is turned over to the Owner at Substantial Completion.

3.8 CLEANING

A. Refer to the Division-01 Section; PROJECT CLOSEOUT or FINAL CLEANING for general requirements for final cleaning.

B. Clean all light fixtures and lenses prior to final acceptance. Replace all inoperative fixtures.

3.9 WARRANTIES

A. Refer to individual equipment specifications for warranty requirements.

B. Compile and assemble the warranties specified in Division-26, into a separate set of vinyl covered, three ring binders, tabulated and indexed for easy reference.

C. Provide complete warranty information for each item to include product or equipment, date of beginning of warranty or bond; duration of warranty or bond; and names, addresses, and telephone numbers and procedures for filing a claim and obtaining warranty services.

D. The Contractor shall guarantee labor, materials and equipment for a period of one (1) year from Substantial Completion, or from Owner's occupancy, whichever is earlier. Contractor shall make good any defects and shall include all necessary adjustments to and replacement of defective items without expense to the Owner.

E. In addition to manufacturer's guarantee of each item, Contractor shall provide his standard guarantee after final acceptance and make good any defects of materials or workmanship occurring during this period without expense to the owner.

F. Owner reserves the right to make emergency repairs as required to keep equipment in operation without voiding Contractor's Guarantee Bond nor relieving Contractor of his responsibilities during guarantee period.

3.10 ACCEPTANCE:

A. Request inspections as required under the Supplementary or General Conditions. Conceal no work until inspected.

B. Punch List: Submit written confirmation that all punch lists have been checked and the required work completed. The contractor at the Engineer's current billing rate shall pay for additional field time required by the Engineer to report or check on past punch list deficiencies.

C. Instructions: At completion of the work, provide a competent and experienced person who is thoroughly familiar with the project, for a period deemed necessary by the Owner to instruct permanent operating personnel in the operation of equipment and control systems.

D. Operation and Maintenance Manuals: Furnish as required in earlier sections.

E. Control Diagrams: Frame under glass and mount on equipment room wall. See drawings for requirements.

F. Test together and separately to determine that:

1. System is free from short circuits and other faults.
2. Motor starter overload devices are sized correctly.
3. Motors rotate correctly.
4. All equipment operates correctly and as specified.

G. Warranties: Submit copies of all manufacturers' warranties.

H. Record Drawings: Submit "Record Drawings".

I. Install engraved metal or plastic nameplates or tags on controls, panels, switches, starters, timers, and similar operable equipment, keyed by number to operating instructions. Dymo type labels are not acceptable.

J. Acceptance will be on the basis of tests and inspections of the work. A representative of the firm, which performed the testing, shall be in attendance to assist during inspection. Contractor shall furnish necessary electricians to operate system, make any necessary adjustments and assist with final inspection.

END OF SECTION 26 0100

SECTION 260519

LOW-VOLTAGE ELECTRICAL POWER CONDUCTORS

PART 1 – GENERAL

1.1 SUMMARY

A. This Section includes the following:

1. Building wires and cables rated 600 Volt and less.
2. Connectors, splices, and terminations rated 600 Volt and less.

1.2 ACTION SUBMITTALS

A. Product data for low voltage electrical power conductors and cables.

B. Manufacturer's specification sheets inclusive of materials ratings and listings for intended applications and installation instructions,

1.3 QUALITY ASSURANCE

A. Electrical Components, Devices, and Accessories: Listed and labeled as defined in NFPA 70, Article 100, by a testing agency acceptable to authorities having jurisdiction, and marked for intended use.

B. Comply with most recently adopted NFPA 70.

PART 2 – PRODUCTS

2.1 CONDUCTORS

A. Manufacturers: Subject to compliance with requirements, provide products by one of the following:

1. Alan Wire.
2. Encore Wire Corporation.
3. Okonite Company.
4. Southwire Company.

B. Conductors shall be Copper: Comply with NEMA WC 70. Aluminum conductors are not approved.

C. Conductor Insulation: Type THHN/THWN. Color coding shall be employed throughout entire length of conductor for all conductor sizes. Phase taping is not allowed.

D. An alternate has been accepted for the use of MC Cable, and is structured as follows:

1. Provide EMT conduits for power and lighting in all exposed, surface applications, including inside of all equipment rooms. Power and lighting within or running through ground level amenity or retail areas are to remain in EMT conduit. Change EMT conduit to MC Cable at all other interior locations where concealed and allowable by code. This alternate does not apply to Dining or Wellness.

2.2 CONNECTORS AND SPLICES

A. Manufacturers: Subject to compliance with requirements, provide products by one of the following:

1. Hubbell Power Systems, Inc.
2. O-Z/Gedney; EGS Electrical Group LLC.
3. Polaris Electrical Connectors.
4. Ideal Wire Connectors.
5. ILSCO

B. Description: Factory-fabricated connectors and splices of size, ampacity rating, material, type, and class for application and service indicated.

C. Connectors and splices in exterior in-ground handholes shall be Polaris Submersible (Blue) type ITW and IPLW suitable for the number of conductors (no substitutions). Ideal weatherproof connectors are acceptable for terminating single conductors, or for conductor sizes less than #6 AWG. Use Polaris Submersible type for two or more conductors larger than #8 AWG. Provide minimum three wraps of electrical tape around Polaris black caps.

PART 3 - EXECUTION

3.1 CONDUCTOR MATERIAL APPLICATIONS

A. Feeders: Solid for No. 10 AWG and smaller; stranded for No. 8 AWG and larger. Coordinate minimum allowable feeder size for the intended installation with

contract documents.

B. Branch Circuits: Solid for No. 10 AWG and smaller; stranded for No. 8 AWG and larger. Minimum conductor size No. 12 AWG.

3.2 CONDUCTOR INSULATION AND MULTICONDUCTOR CABLE APPLICATIONS AND WIRING METHODS

A. Service Entrance: Type THHN-THWN, single conductors in raceway.

B. Feeders: Type THHN-THWN, single conductors in raceway.

C. Branch Circuits: Type THHN-THWN, single conductors in raceway.

D. Cord Drops and Portable Appliance Connections: Type SO, hard service cord with stainless-steel, wire-mesh strain relief device at terminations to suit application.

3.3 INSTALLATION OF CONDUCTORS

A. Use manufacturer-approved pulling compound or lubricant where necessary; compound used must not deteriorate conductor or insulation. Do not exceed manufacturer's recommended maximum pulling tensions and sidewall pressure values.

B. Use pulling means such as fish tape, cable, rope, and basket-weave wire/cable grips that will not damage cables or raceway.

C. Identify and color-code conductors and cables according to Division 26 Section "Identification for Electrical Systems".

D. Tighten electrical connectors and terminals according to manufacturer's published torque-tightening values. If manufacturer's torque values are not indicated, use those specified in UL 486A and UL 486B.

E. Make splices and taps that are compatible with conductor material and that possess equivalent or better mechanical strength and insulation ratings than unspliced conductors. Service entrance and panel feeders shall not be spliced.

F. Wiring at Outlets: Install conductors at each outlet, with at least 6 inches of slack.

G. Wiring in in-ground handholes: Loop all phase conductors, neutral conductors, and equipment grounds 360 degrees in handhole before terminating or before pulling to the next handhole.

H. Wiring in light poles handholes: Provide at least 18” of slack at handhole.

END OF SECTION 260519

SECTION 260526

GROUNDING AND BONDING FOR ELECTRICAL SYSTEMS

PART 1 - GENERAL

1.1 RELATED DOCUMENTS

A. Drawings and general provisions of the Contract, including General and Supplementary Conditions and Division 01 Specification Sections, apply to this Section.

1.2 SUMMARY

A. Section includes grounding and bonding systems and equipment.

B. Section includes grounding and bonding systems and equipment, plus the following special applications:

1. Underground distribution grounding.
2. Ground bonding common with lightning protection system.
3. Foundation steel electrodes.

1.3 ACTION SUBMITTALS

A. Product Data: For each type of product indicated.

1. General: Submit product data on ground rods, ground wire, ground connectors, ground bars, and data on exothermic welds.

1.4 INFORMATIONAL SUBMITTALS

A. Coordination Drawings: Plans showing dimensioned locations of grounding features specified in "Field Quality Control" Article, including the following:

1. Test wells.
2. Ground rods.
3. Ground rings.
4. Grounding arrangements and connections for separately derived systems.

B. Qualification Data: For testing agency and testing agency's field supervisor. (If engaged by the Contractor)

C. Field quality-control reports.

1. Test procedures used.
2. Test results that comply with requirements.
3. Results of failed tests and corrective action taken to achieve test results that comply with requirements.

1.5 CLOSEOUT SUBMITTALS

A. Operation and Maintenance Data: For grounding to include in emergency, operation, and maintenance manuals.

1. In addition to items specified in Section 017823 "Operation and Maintenance Data," include the following:

a. Plans showing as-built, dimensioned locations of grounding features specified in "Field Quality Control" Article, including the following:

1) Test wells.
2) Ground rods.
3) Ground rings.
4) Grounding arrangements and connections for separately derived systems.

1.6 QUALITY ASSURANCE

A. Testing Agency Qualifications: Certified by NETA.

1. Testing Agency's Field Supervisor: Currently certified by NETA to supervise on-site testing.

PART 2 - PRODUCTS

2.1 SYSTEM DESCRIPTION

A. General: Provide a grounding electrode system in compliance with NFPA 70 Article 250, as specified herein, and as shown on the Construction Drawings.

B. Electrical Components, Devices, and Accessories: Listed and labeled as defined in NFPA 70, by a qualified testing agency, and marked for intended location and application.

C. Comply with UL 467 for grounding and bonding materials and equipment.

2.2 MANUFACTURERS

A. Manufacturers: Subject to compliance with requirements, provide or comparable product by one of the following:

1. Burndy; Part of Hubbell Electrical Systems.
2. Dossert; AFL Telecommunications LLC.
3. ERICO International Corporation.
4. Fushi Copperweld Inc.
5. Galvan Industries, Inc.; Electrical Products Division, LLC.
6. Harger Lightning & Grounding.
7. ILSCO.
8. O-Z/Gedney; a brand of Emerson Industrial Automation.
9. Robbins Lightning, Inc.
10. Siemens Power Transmission & Distribution, Inc.
11. Thomas & Betts Corporation, A Member of the ABB Group.
12. Topaz Electric; a division of Topaz Lighting Corp. U

2.3 CONDUCTORS

A. Size: Grounding electrode conductors shall be sized as specified herein and on the drawings, but in no case shall be smaller than required by NFPA 70.

B. Insulated Conductors: Copper wire or cable insulated for 600 V unless otherwise required by applicable Code or authorities having jurisdiction.

C. Bare Copper Conductors:

1. Solid Conductors: ASTM B 3.
2. Stranded Conductors: ASTM B 8.
3. Tinned Conductors: ASTM B 33.
4. Bonding Cable: 28 kcmil, 14 strands of No. 17 AWG conductor, 1/4 inch in diameter.
5. Bonding Conductor: No. 4 or No. 6 AWG, stranded conductor.
6. Bonding Jumper: Copper tape, braided conductors terminated with copper ferrules; 1-5/8 inches wide and 1/16 inch thick.

7. Tinned Bonding Jumper: Tinned-copper tape, braided conductors terminated with copper ferrules; 1-5/8 inches wide and 1/16 inch thick.

D. Grounding Bus: Predrilled rectangular bars of annealed copper, 1/4 by 4 by 18 inches in cross section, with 9/32-inch holes spaced 1-1/8 inches apart. Stand-off insulators for mounting shall comply with UL 891 for use in switchboards, 600 V and shall be Lexan or PVC, impulse tested at 5000 V.

2.4 CONNECTORS

A. Listed and labeled by an NRTL acceptable to authorities having jurisdiction for applications in which used and for specific types, sizes, and combinations of conductors and other items connected.

B. Welded Connectors: Exothermic-welding kits of types recommended by kit manufacturer for materials being joined and installation conditions.

C. Bus-Bar Connectors: Mechanical type, cast silicon bronze, solderless exothermic-type wire terminals, and long-barrel, two-bolt connection to ground bus bar.

D. Beam Clamps: Mechanical type, terminal, ground wire access from four directions, with dual, tin-plated or silicon bronze bolts.

E. Cable-to-Cable Connectors: Compression type, copper or copper alloy.

F. Cable Tray Ground Clamp: Mechanical type, zinc-plated malleable iron.

G. Conduit Hubs: Mechanical type, terminal with threaded hub.

H. Ground Rod Clamps: Mechanical type, copper or copper alloy, terminal with socket set screw.

I. Ground Rod Clamps: Mechanical type, copper or copper alloy, terminal with hex head bolt.

J. Lay-in Lug Connector: Mechanical type, copper rated for direct burial terminal with set screw.

K. Signal Reference Grid Clamp: Mechanical type, stamped-steel terminal with hex head screw.

L. Straps: Solid copper, copper lugs. Rated for 600 A.

M. Tower Ground Clamps: Mechanical type, copper or copper alloy, terminal one-piece clamp.

N. U-Bolt Clamps: Mechanical type, copper or copper alloy, terminal listed for direct burial.

O. Water Pipe Clamps:

1. Mechanical type, two pieces with stainless-steel bolts.

   a. Material: Die-cast zinc alloy.
   b. Listed for direct burial.

2. U-bolt type with malleable-iron clamp and copper ground connector rated for direct burial.

2.5 GROUNDING ELECTRODES

A. Ground Rods: Copper-clad steel, sectional type; 3/4 inch by 10 feet.

B. Ground Plates: 1/4 inch

2.6 APPLICATIONS

A. Conductors: Install solid conductor for No. 8 AWG and smaller, and stranded conductors for No. 6 AWG and larger unless otherwise indicated.

B. Underground Grounding Conductors: (If Shown on Drawings)
Install bare tinned copper conductor, No. 2/0 AWG minimum.

1. Bury at least 24 inches below grade.

C. Isolated Grounding Conductors: (If Shown on Drawings)
Green-colored insulation with continuous yellow stripe. On feeders with isolated ground, identify grounding conductor where visible to normal inspection, with alternating bands of green and yellow tape, with at least three bands of green and two bands of yellow.

D. Grounding Bus: Install in electrical equipment rooms, in rooms housing service equipment, all electrical rooms with step down transformer, all communications and data rooms (MDF and IDF). Install elsewhere as indicated on drawings.

1. Install bus horizontally, on insulated spacers 2 inches minimum from wall, 6 inches above finished floor unless otherwise indicated.

2. Where indicated on both sides of doorways, route bus up to top of door frame, across top of doorway, and down; connect to horizontal bus.
3. Provide connection from all busses to main service bus/bar via #4/0 copper grounding conductor.
4. In addition to the main service ground, all ground bars shall be interconnected to each other via #4/0 insulated grounding conductor. Each ground bar shall also be bonded to local metallic water piping and building steel via #6 insulated grounding conductor.

E. Conductor Terminations and Connections:

1. Pipe and Equipment Grounding Conductor Terminations: Bolted connectors.
2. Underground Connections: Welded connectors except at test wells and as otherwise indicated.
3. Connections to Ground Rods at Test Wells: Bolted connectors.
4. Connections to Structural Steel: Welded connectors.

2.7 GROUNDING ELECTRODE CONDUCTOR

A. Grounding Electrode Conductor: A main grounding electrode conductor, bare copper, sized per NFPA 70, shall be run in PVC conduit from main service equipment ground bus to the main grounding electrodes. Main grounding electrodes are Ground Field, Main Metallic Water Pipe, Building Steel, and Rebar. The main grounding electrode conductor shall be exothermically welded to main grounding electrodes

B. This conductor shall also be bonded to the following:

1. Telecommunications service ground within 20’ of the electrical service
2. Lightning protection system.
3. Gas and other interior metal piping.

2.8 GROUNDING AT THE SERVICE

A. Equipment grounding conductors and grounding electrode conductors shall be connected to the ground bus. Install a main bonding jumper between the neutral and ground buses.

2.9 GROUNDING SEPARATELY DERIVED SYSTEMS

A. Description: Provide a separately derived grounding system where indicated herein and as required by the NFPA 70. Bond neutral and ground busses together.

B. Services: Provide a separately derived grounding system for all building electrical services and stepdown transformers.

C. Multiple Buildings: Multiple buildings fed from the same electrical service shall be provided with separate grounding electrode systems, as required by the NFPA 70 and specified herein.

D. Emergency Generator: Provide a separately derived grounding system for the emergency system where 4-pole transfer switches are used (neutral and phase conductors are switched). Install grounding electrode(s) at the generator location. The electrode shall be connected to the equipment grounding conductor and to the frame of the generator.

2.10 GROUNDING UNDERGROUND DISTRIBUTION SYSTEM COMPONENTS

A. Comply with IEEE C2 grounding requirements.

B. Pad-Mounted Transformers and Switches: Equipment is provided by local electrical utility company. Coordinate grounding requirements for concrete pads and equipment with the local electrical utility company.

2.11 EQUIPMENT GROUNDING

A. Install insulated equipment grounding conductors with all feeders and branch circuits.

1. In general, all electrical equipment (metallic conduit, motor frames, panelboards, etc.) shall be bonded together with a green insulated copper system grounding conductor in accordance with specific rules of Article 250 of the NFPA 70 Equipment grounding conductors through the raceway system shall be continuous from main switch ground bus to panel ground bar of each panelboard, and from panel grounding bar of each panelboard to branch circuit equipment and devices

B. Install insulated equipment grounding conductors with the following items, in addition to those required by NFPA 70:

1. All raceways shall have an insulated copper system ground conductor run throughout the entire length of circuit installed within conduit in strict accordance with NFPA 70. Grounding conductor shall be included in total conduit fill when determining conduit sizes, even though not included or shown on drawings.

2. Feeders and branch circuits.

3. Lighting circuits.
4. Receptacle circuits.
5. Single-phase motor and appliance branch circuits.
6. Three-phase motor and appliance branch circuits.
7. Flexible raceway runs.
8. Armored and metal-clad cable runs.
9. Busway Supply Circuits: Install insulated equipment grounding conductor from grounding bus in the switchgear, switchboard, or distribution panel to equipment grounding bar terminal on busway.
10. X-Ray Equipment Circuits: Install insulated equipment grounding conductor in circuits supplying x-ray equipment.

C. Air-Duct Equipment Circuits: Install insulated equipment grounding conductor to duct-mounted electrical devices operating at 120 V and more, including air cleaners, heaters, dampers, humidifiers, and other duct electrical equipment. Bond conductor to each unit and to air duct and connected metallic piping.

D. Water Heater, Heat-Tracing, and Antifrost Heating Cables: Install a separate insulated equipment grounding conductor to each electric water heater and heat-tracing cable. Bond conductor to heater units, piping, connected equipment, and components.

E. Isolated Grounding Receptacle Circuits: Install an insulated equipment grounding conductor connected to the receptacle grounding terminal. Isolate conductor from raceway and from panelboard grounding terminals. Terminate at equipment grounding conductor terminal of the applicable derived system or service unless otherwise indicated.

F. Isolated Equipment Enclosure Circuits: For designated equipment supplied by a branch circuit or feeder, isolate equipment enclosure from supply circuit raceway with a nonmetallic raceway fitting listed for the purpose. Install fitting where raceway enters enclosure and install a separate insulated equipment grounding conductor. Isolate conductor from raceway and from panelboard grounding terminals. Terminate at equipment grounding conductor terminal of the applicable derived system or service unless otherwise indicated.

G. Poles Supporting Outdoor Luminaires: Install grounding electrode and a separate insulated equipment grounding conductor and bond to pole enclosure, in addition to grounding conductor installed with branch-circuit conductors.

H. Metallic Fences: Comply with requirements of IEEE C2.

1. Grounding Conductor: Bare, copper, not less than No. 8 AWG.
2. Gates: Shall be bonded to the grounding conductor with a flexible bonding jumper.
3. Barbed Wire: Strands shall be bonded to the grounding conductor.

I. Exterior: All exterior grade mounded equipment will have their enclosures grounded directly to a separate driven ground rod at the equipment in addition to the building ground connection.

2.12 INSTALLATION

A. Grounding Conductors: Route along shortest and straightest paths possible unless otherwise indicated or required by Code. Avoid obstructing access or placing conductors where they may be subjected to strain, impact, or damage.

B. Equipment Grounding:

1. Where installed in metal conduit, both conductor and conduit shall be bonded at each end.
2. Have connections accessible for inspection and made with approved solderless connectors brazed (or bolted) to the equipment or structure to be grounded.
3. Shall in NO case be a current carrying conductor.
4. Have green insulation, except that grounding electrode conductors may be bare.

C. Bushings:

1. Provide insulated grounding bushings on all metallic feeder conduits terminated within panelboards, switchboards or enclosed overcurrent devices. Provide insulated grounding bushings on all branch circuit conduits where concentric knockouts are used.
2. Bond all grounding bushings to the equipment ground bus of the panel or switchboard, or overcurrent device in which it is located. Bond shall be made via an insulated bonding conductor of same size as equipment ground conductor run in the circuit.

D. Underground: All connections and bonds made underground and to building steel shall be exothermic weld type-connections.

E. Cable Tray: Provide a #10 bond from all metallic system conduits to the cable tray.

F. Ground Bonding Common with Lightning Protection System: Comply with NFPA 780 and UL 96 when interconnecting with lightning protection system. Bond electrical power system ground directly to lightning protection system grounding conductor at closest point to electrical service grounding electrode. Use bonding conductor sized same as system grounding electrode conductor and install in conduit.

G. Ground Rods: Drive rods until tops are 2 inches below finished floor or final grade unless otherwise indicated.

1. Interconnect ground rods with grounding electrode conductor below grade and as otherwise indicated. Make connections without exposing steel or damaging coating if any.
2. The ground field shall consist of three 20 ft long vertically driven ground rods arranged in a triangular pattern spaced 20 feet apart. Additional ground rods shall be added as necessary to achieve the desired resistance.

H. Test well shall be provided with circular, flush traffic rated, grade mounted, twist lock traffic cover with the word “ground” (or similar) on the cover. Test well shall allow clear access to the ground rod and exothermic weld connection of conductor to ground rod. Clearly mark all ground rod locations on the Record Drawings.

1. Installation locations: Provide inspection wells for all ground rods covered by concrete, paving, or other permanent materials that prevent access to ground rods. Set top of test well flush with finished grade or floor

I. Bonding Straps and Jumpers: Install in locations accessible for inspection and maintenance except where routed through short lengths of conduit.

1. Bonding to Structure: Bond straps directly to basic structure, taking care not to penetrate any adjacent parts.
2. Bonding to Equipment Mounted on Vibration Isolation Hangers and Supports: Install bonding so vibration is not transmitted to rigidly mounted equipment.
3. Use exothermic-welded connectors for outdoor locations; if a disconnect-type connection is required, use a bolted clamp.

J. Grounding and Bonding for Piping:

1. Metal Water Service Pipe: Install insulated copper grounding conductors, in conduit, from building's main service equipment, or grounding bus, to main metal water service entrances to building. Connect grounding conductors to main metal water service pipes; use a bolted clamp connector or bolt a lug-type connector to a pipe flange by using one of the lug bolts of the flange. Where a dielectric main water fitting is installed, connect grounding conductor on street side of fitting. Bond metal grounding conductor conduit or sleeve to conductor at each end. The building’s main metallic underground water piping shall be utilized as a grounding electrode, provided the metal pipe is installed in direct contact with the earth for a minimum of 10 feet. Bond the main metallic water service within 5 ft. of the entrance of the water pipe into the building
2. Water Meter Piping: Use braided-type bonding jumpers to electrically bypass water meters. Connect to pipe with a bolted connector.
3. Water Meter: Provide properly sized bonding shunt around water meter and/or dielectric unions in the water pipe.
4. Bond each aboveground portion of gas piping system downstream from equipment shutoff valve.

K. Bonding Interior Metal Ducts: Bond metal air ducts to equipment grounding conductors of associated fans, blowers, electric heaters, and air cleaners. Install tinned -bonding jumper to bond across flexible duct connections to achieve continuity.

L. Grounding for Steel Building Structure: The building steel shall be utilized as a grounding electrode, provided the steel is in direct contact with the earth or is otherwise effectively grounded. Install a driven ground rod at base of each corner column and at intermediate exterior columns at distances not more than 60 feet apart.

M. Ground Ring: Install a grounding conductor, electrically connected to each building structure ground rod and to each steel column, extending around the perimeter of building area

1. Install tinned-copper conductor not less than No. 2/0 AWG for ground ring and for taps to building steel.
2. Bury ground ring not less than 24 inches from building's foundation.

N. Concrete-Encased Grounding Electrode (Ufer Ground): Fabricate according to NFPA 70; use a minimum of 20 feet of bare copper conductor not smaller than No. 4 AWG.

1. If concrete foundation is less than 20 feet long, coil excess conductor within base of foundation.
2. Bond grounding conductor to reinforcing steel in at least four locations and to anchor bolts. Extend grounding conductor below grade and connect to building's grounding grid or to grounding electrode external to concrete.

2.13 FIELD QUALITY CONTROL

A. Perform tests and inspections. Contractor may hire an independent and qualified testing agency to perform tests and inspections.

B. Tests and Inspections:

1. After installing grounding system but before permanent electrical circuits have been energized, test for compliance with requirements.
2. Inspect physical and mechanical condition. Verify tightness of accessible, bolted, electrical connections with a calibrated torque wrench according to manufacturer's written instructions.
3. Test completed grounding system at each location where a maximum ground-resistance level is specified, at service disconnect enclosure grounding terminal, at ground test wells, and at individual ground rods. Make tests at ground rods before any conductors are connected.

a. Measure ground resistance no fewer than two full days after last trace of precipitation and without soil being moistened by any means other than natural drainage or seepage and without chemical treatment or other artificial means of reducing natural ground resistance.
b. Perform tests by fall-of-potential method according to IEEE 81.

4. Prepare dimensioned Drawings locating each test well, ground rod and ground-rod assembly, and other grounding electrodes. Identify each by letter in alphabetical order, and key to the record of tests and observations. Include the number of rods driven and their depth at each location and include observations of weather and other phenomena that may affect test results. Describe measures taken to improve test results.

C. Grounding system will be considered defective if it does not pass tests and inspections. Refer to Division 01, Section “Quality Requirements” for retesting and re-inspecting requirements and Division 01, Section “Execution” for requirements for correcting the work.

D. Prepare test and inspection reports.

E. Report measured ground resistances that exceed the following values as shown below in Items 1 through 7. Only perform testing on items that apply to the project.

1. Power and Lighting Equipment or System with Capacity of 500 kVA and Less: 10 ohms.
2. Power and Lighting Equipment or System with Capacity of 500 to 1000 kVA: 5 ohms.
3. Power and Lighting Equipment or System with Capacity More Than 1000 kVA: 3 ohms.
4. Power Distribution Units or Panelboards Serving Electronic Equipment: 1 ohm(s).
5. Substations and Pad-Mounted Equipment: 5 ohms.
6. Manhole Grounds: 10 ohms.

F. Excessive Ground Resistance: If resistance to ground exceeds specified values, notify the Electrical Engineer promptly and include recommendations to reduce ground resistance.

END OF SECTION 260526

SECTION 260529

HANGERS AND SUPPORTS FOR ELECTRICAL SYSTEMS

PART 1 - GENERAL

1.1 SUMMARY

A. Section includes:

1. Hangers and supports for electrical equipment and systems.

1.2 PERFORMANCE REQUIREMENTS

A. Design supports for multiple raceways capable of supporting combined weight of supported systems and its contents.

B. Design equipment supports capable of supporting combined operating weight of supported equipment and connected systems and components.

C. Rated Strength: Adequate in tension, shear, and pullout force to resist maximum loads calculated or imposed.

1.3 ACTION SUBMITTALS

A. Product Data:

1. Steel slotted support systems.
2. Raceway and cable support systems.
3. Mounting and support clamps.
4. Mounting and support through bolts and toggle bolts.
5. Mounting and support all thread hanger rods.

B. Shop Drawings: Show fabrication and installation details and include calculations for the following:

1. Trapeze hangers. Include Product Data for components.
2. Aluminum/Steel slotted channel systems. Include Product Data for components.
3. Equipment supports.

1.4 INFORMATIONAL SUBMITTALS

A. Welding certificates.

1.5 QUALITY ASSURANCE

A. Welding: Qualify procedures and personnel according to AWS D1.1/D1.1M, "Structural Welding Code - Steel."

B. Comply with NFPA 70.

PART 2 – PRODUCTS

2.1 SUPPORT, ANCHORAGE, AND ATTACHMENT COMPONENTS

A. Steel Slotted Support Systems: Comply with MFMA-4, factory-fabricated components for field assembly.

1. Manufacturers: Subject to compliance with requirements, provide products by one of the following:

a. Allied Tube & Conduit.
b. Cooper B-Line, Inc.; a division of Cooper Industries.
c. ERICO International Corporation.
d. GS Metals Corp.
e. Thomas & Betts Corporation.
f. Unistrut; Tyco International, Ltd.
g. Wesanco, Inc.
h. Kindorf.

2. Metallic Coatings: Hot-dip galvanized after fabrication and applied according to MFMA-4.
3. Nonmetallic Coatings: Manufacturer's standard PVC, polyurethane, or polyester coating applied according to MFMA-4.
4. Painted Coatings: Manufacturer's standard painted coating applied according to MFMA-4.
5. Channel Dimensions: Selected for applicable load criteria.
6. Exterior mounted channel: stainless steel or aluminum.

B. Raceway and Cable Supports: As described in NECA 1 and NECA 101.

C. Conduit and Cable Support Devices: Steel hangers, clamps, and associated fittings, designed for types and sizes of raceway or cable to be supported. Exterior and wet locations shall be stainless steel or aluminum with stainless steel hardware.

D. Structural Steel for Fabricated Supports and Restraints: ASTM A 36/A 36M, steel plates, shapes, and bars; black and galvanized.

E. Mounting, Anchoring, and Attachment Components: Items for fastening electrical items or their supports to building surfaces include the following:

1. Powder-Actuated Fasteners: Threaded-steel stud, for use in hardened portland cement concrete, steel, or wood, with tension, shear, and pullout capacities appropriate for supported loads and building materials where used.

   a. Manufacturers: Subject to compliance with requirements, provide products by one of the following:

      1) Hilti Inc.
      2) ITW Ramset/Red Head; a division of Illinois Tool Works, Inc.
      3) MKT Fastening, LLC.
      4) Simpson Strong-Tie Co., Inc.; Masterset Fastening Systems Unit.

2. Mechanical-Expansion Anchors: Insert-wedge-type, zinc-coated or stainless steel, for use in hardened portland cement concrete with tension, shear, and pullout capacities appropriate for supported loads and building materials in which used.

   a. Manufacturers: Subject to compliance with requirements, provide products by one of the following:

      1) Cooper B-Line, Inc.; a division of Cooper Industries.
      2) Empire Tool and Manufacturing Co., Inc.
      3) Hilti Inc.
      4) ITW Ramset/Red Head; a division of Illinois Tool Works, Inc.
      5) MKT Fastening, LLC.

3. Concrete Inserts: Steel or malleable-iron, slotted support system units similar to MSS Type 18; complying with MFMA-4 or MSS SP-58.
4. Clamps for Attachment to Steel Structural Elements: MSS SP-58, type suitable for attached structural element.
5. Through Bolts: Structural type, hex head, and high strength. Comply with

ASTM A 325.

6. Toggle Bolts: All-steel springhead type.
7. Hanger Rods: Threaded steel.
8. Mounting apparatus for exterior applications shall be stainless steel.

2.2 FABRICATED METAL EQUIPMENT SUPPORT ASSEMBLIES

A. Description: Welded or bolted, structural-steel shapes, shop or field fabricated to fit dimensions of supported equipment.

B. Materials: Comply with requirements in Division 05 Section "Metal Fabrications" for steel shapes and plates.

PART 3 - EXECUTION

3.1 APPLICATION

A. Comply with NECA 1 and NECA 101 for application of hangers and supports for electrical equipment and systems except if requirements in this Section are stricter.

B. Maximum Support Spacing and Minimum Hanger Rod Size for Raceway: Space supports for EMT, IMC, and RMC as required by NFPA 70. Minimum rod size shall be 1/4 inch in diameter.

C. Multiple Raceways or Cables: Install trapeze-type supports fabricated with steel slotted support system, sized so capacity can be increased by at least 25 percent in future without exceeding specified design load limits.

1. Secure raceways and cables to these supports with two-bolt conduit clamps.

D. Spring-steel clamps designed for supporting single conduits without bolts may be used for 1-1/2-inch and smaller raceways serving branch circuits and communication systems above suspended ceilings and for fastening raceways to trapeze supports.

3.2 SUPPORT INSTALLATION

A. Comply with NECA 1 and NECA 101 for installation requirements except as specified in this Article.

B. Raceway Support Methods: In addition to methods described in NECA 1, EMT, IMC, and RMC may be supported by openings through structure members, as permitted in NFPA 70.

C. Strength of Support Assemblies: Where not indicated, select sizes of components so strength will be adequate to carry present and future static loads within specified loading limits. Minimum static design load used for strength determination shall be weight of supported components plus 200 lb.

D. Mounting and Anchorage of Surface-Mounted Equipment and Components: Anchor and fasten electrical items and their supports to building structural elements by the following methods unless otherwise indicated by code:

1. To Wood: Fasten with lag screws or through bolts.
2. To New Concrete: Bolt to concrete inserts.
3. To Masonry: Approved toggle-type bolts on hollow masonry units and expansion anchor fasteners on solid masonry units.
4. To Existing Concrete: Expansion anchor fasteners.
5. Instead of expansion anchors, powder-actuated driven threaded studs provided with lock washers and nuts may be used in existing standard-weight concrete 4 inches thick or greater. Do not use for anchorage to lightweight-aggregate concrete or for slabs less than 4 inches thick.
6. To Steel: Beam clamps (MSS Type 19, 21, 23, 25, or 27) complying with MSS SP-69.
7. To Light Steel: Sheet metal screws.
8. Items Mounted on Hollow Walls and Nonstructural Building Surfaces: Mount cabinets, panelboards, disconnect switches, control enclosures, pull and junction boxes, transformers, and other devices on slotted-channel racks attached to substrate.

E. Drill holes for expansion anchors in concrete at locations and to depths that avoid reinforcing bars.

F. Supporting raceways via other raceways is not approved.

G. Supporting raceways via cable trays and wireways or cable tray and wireway supports is not approved.

3.3 INSTALLATION OF FABRICATED METAL SUPPORTS

A. Comply with installation requirements in Division 05 Section "Metal Fabrications" for site-fabricated metal supports.

B. Cut, fit, and place miscellaneous metal supports accurately in location, alignment, and elevation to support and anchor electrical materials and equipment.

C. Field Welding: Comply with AWS D1.1/D1.1M.

3.4 PAINTING

A. Touchup: Clean field welds and abraded areas of shop paint. Paint exposed areas immediately after erecting hangers and supports. Use same materials as used for shop painting. Comply with SSPC-PA 1 requirements for touching up field-painted surfaces.

1. Apply paint by brush or spray to provide minimum dry film thickness of 2.0 mils.

B. Touchup: Comply with requirements in Division 09 painting Section for cleaning and touchup painting of field welds, bolted connections, and abraded areas of shop paint on miscellaneous metal.

C. Galvanized Surfaces: Clean welds, bolted connections, and abraded areas and apply galvanizing-repair paint to comply with ASTM A 780.

3.5 Exterior Supports for Electric Panels, Cabinets, and Equipment:

A. Support post shall be concrete sized for the intended installation. Minimum size for mounting panels, disconnect switches, etc. shall be 6” x 6” x 10’ (4’ embedded).

B. Unistrut channel shall be stainless steel or aluminum.

C. Mounting hardware shall be stainless steel.

END OF SECTION 260529

SECTION 260533

RACEWAYS AND BOXES FOR ELECTRICAL SYSTEMS

PART 1 - GENERAL

1.1 SUMMARY

A. Section Includes:

1. Metal conduits, tubing, and fittings.
2. Nonmetal conduits, tubing, and fittings.
3. Metal wireways and auxiliary gutters.
4. Nonmetal wireways and auxiliary gutters.
5. Surface raceways.
6. Boxes, enclosures, and cabinets.
7. Handholes and boxes for exterior underground cabling.

1.2 ACTION SUBMITTALS

A. Product Data: For raceways, fittings, outlet boxes, junction and pull boxes, floor boxes, hinged-cover enclosures, and cabinets.

B. LEED Submittals:

1. Product Data for LEED Credit: For solvent cements and adhesive primers, documentation including printed statement of VOC content.

C. Shop Drawings: For custom enclosures and cabinets. Include plans, elevations, sections, and attachment details.

PART 2 - PRODUCTS

2.1 METAL CONDUITS, TUBING, AND FITTINGS

A. Listing and Labeling: Metal conduits, tubing, and fittings shall be listed and labeled as defined in NFPA 70, by a qualified testing agency, and marked for intended location and application.

B. RMC (Rigid Metallic Conduit)
   1. GRC (Galvanized Rigid Conduit): Comply with ANSI C80.1 and UL 6.
   2. RAC (Rigid Aluminum Conduit): Comply with ANSI C80.5 and UL 6A.

C. IMC (Intermediate Metal Conduit): Comply with ANSI C80.6 and UL 1242.

D. EMT (Electrical Metallic Conduit): Comply with ANSI C80.3 and UL 797.

E. FMC (Flexible Metal Conduit): Comply with UL 1; zinc-coated steel or aluminum.

F. LFMC (Liquidtight Flexible Metal Conduit): Flexible steel conduit with PVC jacket and complying with UL 360.

G. Fittings for Metal Conduit: Comply with NEMA FB 1 and UL 514B, compatible with raceway and tubing materials.

   1. Conduit Fittings for Hazardous (Classified) Locations: Comply with UL 886 and NFPA 70.
   2. Fittings for EMT:

      a. Material: Steel or die cast.
      b. Type: Setscrew or compression.
      c. Fittings shall be die cast compression type in damp locations.

   3. Expansion Fittings: PVC or steel to match conduit type, complying with UL 651, rated for environmental conditions where installed, and including flexible external bonding jumper.
   4. Coating for Fittings for PVC-Coated Conduit: Minimum thickness of 0.040 inch, with overlapping sleeves protecting threaded joints.

H. Joint Compound for IMC or GRC: Approved, as defined in NFPA 70, by authorities having jurisdiction for use in conduit assemblies, and compounded for use to lubricate and protect threaded conduit joints from corrosion and to enhance their conductivity.

2.2 NONMETALLIC CONDUITS, TUBING, AND FITTINGS

A. Listing and Labeling: Nonmetallic conduits, tubing, and fittings shall be listed and labeled as defined in NFPA 70, by a qualified testing agency, and marked for intended location and application.

B. ENT (Electrical Nonmetallic Conduit): Comply with NEMA TC 13 and UL 1653.

C. RNC (Rigid Nonmetallic Conduit): Type EPC-40-PVC (PVC), complying with NEMA TC 2 and UL 651 unless otherwise indicated.

D. Fittings for ENT: Comply with NEMA TC 3; match to conduit or tubing type and material.

E. Solvent cements and adhesive primers shall have a VOC content of 510 and 550 g/L or less, respectively, when calculated according to 40 CFR 59, Subpart D (EPA Method 24).

2.3 METAL WIREWAYS AND AUXILIARY GUTTERS

A. Description: Sheet metal, complying with UL 870 and NEMA 250, Type 1, Type 3R, Type 4, or Type 12 dictated by the application unless otherwise indicated, and sized according to NFPA 70.

1. Metal wireways installed outdoors shall be listed and labeled as defined in NFPA 70, by a qualified testing agency, and marked for intended location and application.

B. Fittings and Accessories: Include covers, couplings, offsets, elbows, expansion joints, adapters, hold-down straps, end caps, and other fittings to match and mate with wireways as required for complete system.

2.4 SURFACE RACEWAYS

A. Listing and Labeling: Surface raceways and tele-power poles shall be listed and labeled as defined in NFPA 70, by a qualified testing agency, and marked for intended location and application.

B. Surface Metal Raceways: Galvanized steel with snap-on covers complying with UL 5.

C. Surface Nonmetallic Raceways: Two or three-piece construction, complying with UL 5A, and manufactured of rigid PVC. Product shall comply with UL 94 V-0 requirements for self-extinguishing characteristics.

2.5 BOXES, ENCLOSURES, AND CABINETS

A. General Requirements for Boxes, Enclosures, and Cabinets: Boxes, enclosures,

and cabinets installed in wet locations shall be listed for use in wet locations.

B. Sheet Metal Outlet and Device Boxes: Comply with NEMA OS 1 and UL 514A.

C. Cast-Metal Outlet and Device Boxes: Comply with NEMA FB 1, aluminum, Type FD, with gasketed cover.

D. Nonmetallic Outlet and Device Boxes: Comply with NEMA OS 2 and UL 514C.

E. Metal Floor Boxes:

1. Material: Cast metal.
2. Type: Fully adjustable.
3. Shape: Rectangular.
4. Listing and Labeling: Metal floor boxes shall be listed and labeled as defined in NFPA 70, by a qualified testing agency, and marked for intended location and application.

F. Luminaire Outlet Boxes: Nonadjustable, designed for attachment of luminaire weighing 50 lb. Outlet boxes designed for attachment of luminaires weighing more than 50 lb shall be listed and marked for the maximum allowable weight.

G. Small Sheet Metal Pull and Junction Boxes: NEMA OS 1.

H. Cast-Metal Access, Pull, and Junction Boxes: Comply with NEMA FB 1 and UL 1773, cast aluminum with gasketed cover.

I. Box extensions used to accommodate new building finishes shall be of same material as recessed box.

J. Gangable boxes are prohibited.

K. Hinged-Cover Enclosures: Comply with UL 50 and NEMA 250, Type 1, Type 3R, Type 4, or Type 12 required by the application with continuous-hinge cover. Interior hinged cover enclosures shall have flush latch. Exterior hinged cover enclosures shall be pad lockable with University of Tampa pad lock.

1. Metal Enclosures: Steel, finished inside and out with manufacturer's standard enamel.
2. Nonmetallic Enclosures are not acceptable.
3. Interior Panels: Steel; all sides finished with manufacturer's standard enamel.
4. Hinged Cover Enclosures located in chiller plants, boiler plants, lift stations, irrigation wells shall be stainless steel.

L. Cabinets:

1. NEMA 250, Type 1, Type 3R, or Type 12 required by the application galvanized- steel box with removable interior panel and removable front, finished inside and out with manufacturer's standard enamel.
2. Hinged door in front cover with flush latch and concealed hinge. Exterior hinged door shall be pad lockable with University of Tampa pad lock.
3. Interior hinged door shall be key latch to match panelboards.
4. Metal barriers to separate wiring of different systems and voltage.
5. Accessory feet where required for freestanding equipment.
6. Nonmetallic cabinets are not acceptable.
7. Cabinets located in chiller plants, boiler plants, lift stations, irrigation wells shall be stainless steel.

PART 3 - EXECUTION

3.1 RACEWAY APPLICATION

A. Outdoors: Apply raceway products as specified below unless otherwise indicated:

1. Exposed Conduit: GRC.
2. Concealed Conduit, Aboveground: GRC, IMC, EMT, or Type EPC-40-PVC for the approved application.
3. Underground Conduit: Type EPC-40-PVC. Minimum size shall be ¾".
4. Connection to Vibrating Equipment (Including Transformers and Hydraulic, Pneumatic, Electric Solenoid, or Motor-Driven Equipment): FMC or LFMC approved for the application.
5. Boxes and Enclosures, Aboveground: NEMA 250, Type 3R. Provide stainless steel enclosures where required by code, in lift stations areas, chiller plants, boiler plants, and wells.
6. Underground Raceways Warning Tapes – 6" wide by 0.004" thick polyethylene film with aluminum coil detectable tape with appropriate label:

   a. Tape color red with label "Caution – Electrical Line Below"

b. Tape color yellow with label “Caution – Communications Line Below”

B. Indoors: Apply raceway products as specified below unless otherwise indicated.

1. Exposed, Not Subject to Physical Damage: EMT.
2. Exposed and Subject to Physical Damage: GRC. Raceway locations include the following:

   a. Loading docks.
   b. Corridors used for traffic of mechanized carts, forklifts, and pallet-handling units.
   c. Mechanical rooms.
   d. Main and panels feeder raceways in main electrical rooms.
   e. Lift station, chillers, and boilers areas.
   f. Fire pump rooms.

3. Concealed in Ceilings and Interior Walls and Partitions: EMT.
4. Connection to Vibrating Equipment, including Transformers and Hydraulic, Pneumatic, Electric Solenoid, or Motor-Driven Equipment: FMC, except use LFMC in damp or wet locations.
5. Wet Locations: GRC.
6. Boxes and Enclosures: NEMA 250, Type 1, except use NEMA 250, Type 4 stainless steel in kitchens areas, chiller areas, boiler areas, lift stations areas, wells areas.

C. Minimum Raceway Size: 1/2-inch trade size. Minimum EPC-40 size is ¾ inch.

D. Raceway Fittings: Compatible with raceways and suitable for use and location.

1. Rigid and Intermediate Steel Conduit: Use threaded rigid steel conduit fittings unless otherwise indicated. Comply with NEMA FB 2.10.
2. EMT: Use setscrew or compression fittings. Fittings in damp locations shall be die cast compression type. Comply with NEMA FB 2.10.
3. Flexible Conduit: Use only fittings listed for use with flexible conduit. Comply with NEMA FB 2.20.

E. Do not install aluminum conduits, boxes, or fittings in direct contact with concrete or earth.

F. Install surface raceways only where indicated on Drawings.

G. Do not install nonmetallic conduit where ambient temperature exceeds 120 deg F.

3.2 INSTALLATION

A. Comply with NECA 1 and NECA 101 for installation requirements except where requirements on Drawings or in this article are stricter. Comply with NECA 102 for aluminum conduits. Comply with NFPA 70 limitations for types of raceways allowed in specific occupancies and number of floors.

B. Keep raceways at least 6 inches away from parallel runs of flues and steam or hot- water pipes. Install horizontal raceway runs above water and steam piping.

C. Comply with requirements in Division 26 Section "Hangers and Supports for Electrical Systems" for hangers and supports.

D. Arrange stub-ups so curved portions of bends are not visible above finished slab.

E. Install no more than the equivalent of three 90-degree bends in any conduit. Support within 12 inches of changes in direction.

F. Conceal conduit within finished walls, ceilings, and floors unless otherwise indicated.

G. Install conduits (concealed or exposed) parallel or perpendicular to building lines or major structural elements.

H. Support conduit within 12 inches of enclosures to which attached.

I. Raceways Embedded in Slabs:

1. Run conduits parallel or at right angles to main reinforcement. Where at right angles to reinforcement, place conduit close to slab support. Secure raceways to reinforcement at maximum 10-foot intervals.
2. Arrange raceways to cross building expansion joints at right angles with expansion fittings.
3. Arrange raceways to keep a minimum of 2 inches of concrete cover in all directions.
4. Do not embed threadless fittings in concrete.
5. Transition from PVC to GRC before rising above floor.

J. Stub-ups to Above Recessed Ceilings:

1. Use EMT, IMC, or RMC for raceways.
2. Use a conduit bushing or insulated fitting to terminate stub-ups.

K. Threaded Conduit Joints, Exposed to Wet, Damp, Corrosive, or Outdoor Conditions: Apply listed compound to threads of raceway and fittings before making up joints. Follow compound manufacturer's written instructions.

L. Raceway Terminations at Locations Subject to Moisture or Vibration: Use insulating bushings to protect conductors including conductors smaller than No. 4 AWG.

M. Terminate threaded conduits into threaded hubs or with locknuts on inside and outside of boxes or cabinets. Install bushings on conduits ¾ to 1-1/4-inch trade size and insulated throat metal bushings on 1-1/2-inch trade size and larger conduits terminated with locknuts.

N. Install bell ends on all PVC conduits entering medium voltage (campus primary) transformers and gear.

O. Install pull wires in empty raceways. Use polypropylene or monofilament plastic line with not less than 200-lb tensile strength. Leave at least 24 inches of slack at each end of pull wire. Cap underground raceways designated as spare above grade alongside raceways in use. Label all spare conduits with origin.

P. Surface Raceways:

1. Install surface raceway with a minimum 2-inch radius control at bend points.
2. Secure surface raceway with screws or other anchor-type devices at intervals not exceeding 48 inches and with no less than two supports per straight raceway section. Support surface raceway according to manufacturer's written instructions. Tape and glue are not acceptable support methods.

Q. Install raceway sealing fittings at accessible locations according to NFPA 70 and fill them with listed sealing compound. For concealed raceways, install each fitting in a flush steel box with a blank cover plate having a finish similar to that of adjacent plates or surfaces.

R. Install devices to seal raceway interiors at accessible locations. Locate seals so no fittings or boxes are between the seal and the following changes of

environments. Seal the interior of all raceways at the following points:

1. Where conduits pass from warm to cold locations, such as boundaries of refrigerated spaces.
2. Where an underground service raceway enters a building or structure.
3. Where otherwise required by NFPA 70.

S. Expansion-Joint Fittings:

1. Install in each run of aboveground RNC that is located where environmental temperature change may exceed 30 deg F and that has straight-run length that exceeds 25 feet.
2. Install type and quantity of fittings that accommodate temperature change listed for each of the following locations:

    a. Outdoor Locations Not Exposed to Direct Sunlight: 125 deg F temperature change.
    b. Outdoor Locations Exposed to Direct Sunlight: 155 deg F temperature change.
    c. Indoor Spaces Connected with Outdoors without Physical Separation: 125 deg F temperature change.
    d. Attics: 135 deg F temperature change.

3. Install fitting(s) that provide expansion and contraction for at least 0.00041 inch per foot of length of straight run per degree F of temperature change for PVC conduits.
4. Install expansion fittings at all locations where conduits cross building or structure expansion joints.
5. Install each expansion-joint fitting with position, mounting, and piston setting selected according to manufacturer's written instructions for conditions at specific location at time of installation. Install conduit supports to allow for expansion movement.

T. Flexible Conduit Connections: Comply with NEMA RV 3. Use a maximum of 72 inches of flexible conduit for recessed and semi-recessed luminaires, equipment subject to vibration, noise transmission, or movement; and for transformers and motors.

1. Use LFMC in damp or wet locations subject to severe physical damage.
2. Use LFMC or LFNC in damp or wet locations not subject to severe physical damage.

U. Mount boxes at heights indicated on drawings. If mounting heights of boxes are not individually indicated, give priority to ADA requirements. Install boxes with

height measured to center of box unless otherwise indicated.

V. Recessed Boxes in Masonry Walls: Saw-cut opening for box in center of cell of masonry block, and install box flush with surface of wall. Prepare block surface to provide a flat surface for a raintight connection between the box and cover plate or the supported equipment and box.

W. Horizontally separate boxes mounted on opposite sides of walls so they are not in the same vertical channel and to maintain wall fire rating.

X. Locate boxes so that cover or plate will not span different building finishes.

Y. Support boxes of three gangs or more from more than one side by spanning two framing members or mounting on brackets specifically designed for the purpose.

Z. Fasten junction and pull boxes to or support from building structure. Do not support boxes by conduits.

AA. Set metal floor boxes level and flush with finished floor surface.

BB. Set nonmetallic floor boxes level. Trim after installation to fit flush with finished floor surface.

CC. Junction boxes, pull boxes, or other boxes (electrical and control) located in chiller plants, boiler plants, lift stations, and irrigation wells shall be stainless steel.

3.3 INSTALLATION OF UNDERGROUND CONDUIT

A. Direct-Buried Conduit:

1. Excavate trench bottom to provide firm and uniform support for conduit.
2. After installing conduit, backfill and compact. Start at tie-in point, and work toward end of conduit run, leaving conduit at end of run free to move with expansion and contraction as temperature changes during this process. Firmly hand tamped backfill around conduit to provide maximum supporting strength. After placing controlled backfill to within 12 inches of finished grade, make final conduit connection at end of run and complete backfilling with normal compaction.
3. Provide GRC conduit elbows at turn up to equipment and at building entrances through floor. Coat GRC below grade or slab with bitumastic.
4. Underground Warning Tape: Provide underground warning tape 24” above raceway, or 12” below grade if conduit is buried 24” below grade.
5. Electrical raceways shall have minimum of 24” cover (burial depth). Electrical feeders’ raceways (service entrance and panel feeders) shall have minimum 36” cover (burial depth). Electrical raceways installed under concrete slabs shall have minimum 12” cover from slab bottom with electrical warning tap 6” above raceway. Electrical service entrance raceways installed under concrete slabs shall have minimum 24” cover from slab bottom with electric warning tap 6” above raceway.
6. Provide directional boring under all existing roadways and sidewalks.
7. Raceways for site lighting, including pedestrian, roadway and parking lot, shall be routed 12 to 18 inches within roadway curb or sidewalk and sweep to the in- ground handhole to allow future trees.

3.4 INSTALLATION OF UNDERGROUND HANDHOLES AND BOXES

A. Install handholes and boxes level and plumb and with orientation and depth coordinated with connecting conduits to minimize bends and deflections required for proper entrances.

B. Elevation: In paved areas, set so cover surface will be flush with finished grade. Set covers of other enclosures 1 inch above finished grade.

C. In-ground handholes and boxes in finish grade:

1. In landscaped areas – Set top 1” above finish ground cover.

2. In sodded areas – Set top 2" above grade before sod is laid. Once sod is laid, the top shall be no more than 1" above the sod.
3. Handholes shall be set to follow slope of grade.

3.5 SLEEVE AND SLEEVE-SEAL INSTALLATION FOR ELECTRICAL PENETRATIONS

A. Install sleeves and sleeve seals at penetrations of exterior floor and wall assemblies meeting required UL fire ratings.

3.6 FIRESTOPPING

A. Install firestopping at penetrations of fire-rated floor and wall assemblies meeting required UL fire ratings.

3.7 PROTECTION

A. Protect coatings, finishes, and cabinets from damage and deterioration.

1. Repair damage to galvanized finishes with zinc-rich paint recommended by manufacturer.
2. Repair damage to paint finishes with matching touchup coating recommended by manufacturer.
3. Provide bitumastic coating prior to installation to all RMC installed in grade.

3.8 RENOVATIONS AND DEMOLITION

A. Remove abandoned outlets and raceways, including conductors, back to last device to remain in service or back to source panel. Where removed back to source panel, label circuit breaker(s) not re-used as spare and provide an updated typewritten panel directory.

END OF SECTION 260533

SECTION 260553

ELECTRICAL IDENTIFICATION

PART 1- GENERAL

1.1 RELATED DOCUMENTS

A. General: Drawings and general provisions of the Contract, including General and Supplementary Conditions and Division 1 Specification sections, apply to work specified in this section.

1.2 SUMMARY

A. Extent: Electrical identification work as required by the Contract Documents or other specifications.

B. Section Includes:

1. Identification for raceways.
2. Identification of power and control cables.
3. Identification for conductors.
4. Underground-line warning tape.
5. Warning labels and signs.
6. Instruction signs.
7. Equipment identification labels.
8. Miscellaneous identification products

1.2 SUBMITTALS

A. Product Data: Submit shop drawings of all identification materials to be used for this project. Indicate equipment that will be identified with each individual submittal.

1.3 QUALITY ASSURANCE

A. Comply with ANSI A13.1.

B. Comply with NFPA 70.

C. Comply with 29 CFR 1910.144 and 29 CFR 1910.145.

D. Comply with ANSI Z535.4 for safety signs and labels.

E. Adhesive-attached labeling materials, including label stocks, laminating adhesives, and inks used by label printers, shall comply with UL 969.

F. ADA Compliance: All signage shall meet ADA standards. Identification for maintenance purposes shall be as specified herein

G. d

PART 2- PRODUCTS

1.4 RACEWAY SYSTEM IDENTIFICATION

A. Color Coding: All electrical conduits shall be identified by color-coding. Apply color-coded identification on electrical conduit in a neat and workmanlike manner. Utilize a stencil for application of paint.

B. Identification: Identify all raceways provided or utilized as part of this project as follows:

1. Apply bands 10 feet on center along the raceway system and at each side of walls or floors, and at branches from mains.

2. Identify the following services:

Service	Label
Low Voltage	120/208 Voltage
Low Voltage	120/240 Voltage
High Voltage	277/480 Voltage
Fire Alarm	Fire Alarm
Telephone	Telephone
Computer	Computer
Telephone/computer	Telephone/computer

3. Spot Painting on Rough-in:

a. Conduit, raceways, boxes, back boxes, panel boards, etc. shall be spot painted. Conduit shall be identified within 6 inches of the box or enclosure. The entire box and cover plate shall be painted.

b. Use following colors for color bands and for color coding:

	System	Color
(1)	Normal Power	Royal Blue
(2)	Miscellaneous Communications	Brown
(3)	Fire Alarm	Red
(4)	Telephone\Computer	Black
(5)	Life Safety	Yellow

1.5 CABLE/CONDUCTOR IDENTIFICATION

A. General: Apply cable/conductor identification, including voltage, phase and feeder number, on each cable/conductor in each box/enclosure/cabinet where conductors of more than one circuit or communication (such as color coded conductors) is provided. Match identification with marking system used in panelboards, shop drawings, contract documents, and similar previously established identification for the project's electrical work.

B. Color Coding: Color code all cables. Use wire colored by integral pigmentation, making the wire 100 percent colored. Tape color coding is not acceptable. Applies to feeders and branch circuit conductors of all sizes. Color coding shall be black, red, and blue (white neutral) for 120/208 volt 3-phase wiring, and brown, orange and yellow (grey neutral) for 277/480 volt 3-phase wiring. Ground conductors shall be green:

C. Color-Coding for conductors shall be consistent throughout entire length. Phase tape color coding is not acceptable. Applies to feeders' conductors and branch circuit conductors. Color coding shall be as follows:

Voltage	Phase A	Phase B	Phase C	Neutral
277/480	Brown	Orange	Yellow	Gray
120/208	Black	Red	Blue	White
120/240	Black	Red	*****	White
120/240 (*)	Black	Orange	Blue	White

(*) Orange shall indicate high leg on three phase 240 Volt delta system.

D. Color shall be factory applied.

1.6 FLOOR MARKING TAPE

A. 2-inch- wide, 5-mil pressure-sensitive vinyl tape, with black and white stripes and clear vinyl overlay.

1.7 UNDERGROUND-LINE WARNING TAPE

A. Tape:

1. Provide warning tape to identify and locate underground electrical and communications utility lines.
2. Recommended by manufacturer for the method of installation and suitable to identify and locate underground electrical and communications utility lines.
3. Printing on tape shall be permanent and shall not be damaged by burial operations.

4. Tape material and ink shall be chemically inert, and not subject to degrading when exposed to acids, alkalis, and other destructive substances commonly found in soils.

B. Color and Printing:

1. Comply with ANSI Z535.1 through ANSI Z535.5.
2. Inscriptions for Red-Colored Tapes: ELECTRIC LINE, HIGH VOLTAGE.
3. Inscriptions for Orange-Colored Tapes: TELEPHONE CABLE, CATV CABLE, COMMUNICATIONS CABLE, OPTICAL FIBER CABLE.

1.8 WARNING LABELS AND SIGNS

A. Comply with NFPA 70 and 29 CFR 1910.145.

B. Self-Adhesive Warning Labels: Factory-printed, multicolor, pressure-sensitive adhesive labels, configured for display on front cover, door, or other access to equipment unless otherwise indicated.

C. Metal-Backed, Butyrate Warning Signs:

1. Weather-resistant, nonfading, preprinted, cellulose-acetate butyrate signs with 0.0396-inch galvanized-steel backing; and with colors, legend, and size required for application.
2. 1/4-inch grommets in corners for mounting.
3. Nominal size, 10 by 14 inches.

D. Baked-Enamel Warning Signs

1. Preprinted aluminum signs, punched or drilled for fasteners, with colors, legend, and size required for application.
2. 1/4-inch grommets in corners for mounting.
3. Nominal size, 7 by 10 inches.

E. Warning label and sign shall include, but are not limited to, the following legends:

1. Multiple Power Source Warning: "DANGER - ELECTRICAL SHOCK HAZARD - EQUIPMENT HAS MULTIPLE POWER SOURCES."
2. Workspace Clearance Warning: "WARNING - OSHA REGULATION - AREA IN FRONT OF ELECTRICAL EQUIPMENT MUST BE KEPT CLEAR FOR 36 INCHES."

1.9 INSTRUCTION SIGNS

A. Engraved, laminated acrylic or melamine plastic, minimum 1/16 inch thick for signs up to 20 sq. inches and 1/8 inch thick for larger sizes.

1. Engraved legend with white letters on black face.
2. Punched or drilled for mechanical fasteners.
3. Framed with mitered acrylic molding and arranged for attachment at applicable equipment.

B. Adhesive Film Label: Machine printed, in black, by thermal transfer or equivalent process. Minimum letter height shall be 3/8 inch.

C. Adhesive Film Label with Clear Protective Overlay: Machine printed, in black, by thermal transfer or equivalent process. Minimum letter height shall be 3/8 inch. Overlay shall provide a weatherproof and UV-resistant seal for label.

1.10 EQUIPMENT IDENTIFICATION LABELS

A. Interiors - Self-Adhesive, Engraved, Laminated Acrylic or Melamine Label: Adhesive backed and pop rivet to enclosure, with white letters on a dark-gray background. Minimum letter height shall be ½ inch.

B. Outdoors - Stenciled Legend: In nonfading, waterproof. Adhesive backed and pop rivet to enclosure, seal penetrations with silicone. Minimum letter height shall be ½ inch.

C. Identifications:

1. 277/480 Volt – White background with black letters.
2. 120/208 (120/240) Volt – Black background with white letters.
3. 277/480 Volt Emergency Systems – Red background with white letters.
4. 120/208 (120/240) Volt Emergency Systems – Red background with black letters.
5. Letters shall be 1/2” high.
6. Each panel shall be labeled with the panel designation, voltage and phase, and source feeding the panel including circuit numbers.
7. Each transformer shall be labeled with the transformer designation and primary source and secondary fed equipment designation.
8. Each safety switch, enclosed circuit breaker enclosure, etc. shall be labeled with the equipment designation, voltage and phase, and source feeding the equipment including circuit numbers.

1.11 MISCELLANEOUS IDENTIFICATION PRODUCTS

A. Paint: Comply with requirements in Division 09 painting Sections for paint materials and application requirements. Select paint system applicable for surface material and location (exterior or interior).

B. Fasteners for Labels and Signs: Self-tapping, stainless-steel screws or stainless-steel machine screws with nuts and flat and lock washers.

PART 2 - EXECUTION

2.1 INSTALLATION

A. Location: Install identification materials and devices at locations for most convenient viewing without interference with operation and maintenance of equipment.

B. Apply identification devices to surfaces that require finish after completing finish work.

C. Self-Adhesive Identification Products: Clean surfaces before application, using materials and methods recommended by manufacturer of identification device.

D. Attach signs and plastic labels that are not self-adhesive type with mechanical fasteners appropriate to the location and substrate.

E. Underground-Line Warning Tape: During backfilling of trenches install continuous underground-line warning tape directly above line at 6 to 8 inches below finished grade. Use multiple tapes where width of multiple lines installed in a common trench or concrete envelope exceeds 16 inches overall.

F. Painted Identification: Comply with requirements in Division 09 painting Sections for surface preparation and paint application.

G. Label outlet boxes/junction boxes indicating circuits contained therein and source panel, neatly with black permanent marker.

H. Provide labels on outlets cover plates indicating source panel and circuit number. Labels shall be machine type onto permanent tape.

I. Label outlets boxes, inside (not cover plates), indicating circuit contained therein and source panel, neatly with black permanent marker.

J. Paint fire alarm systems outlet boxes/junction boxes red. Spot paint fire alarm conduit red every 10’ to within 12” of box or enclosure.

K. Conductors to Be Extended in the Future: Attach write-on tags to conductors and list source.

L. Auxiliary Electrical Systems Conductor Identification: Identify field-installed alarm, control, and signal connections.

1. Identify conductors, cables, and terminals in enclosures and at junctions, terminals, and pull points. Identify by system and circuit designation.
2. Use system of marker tape designations that is uniform and consistent with system used by manufacturer for factory-installed connections.
3. Coordinate identification with Project Drawings, manufacturer's wiring diagrams, and the Operation and Maintenance Manual.

M. Workspace Indication: Install floor marking tape to show working clearances in the direction of access to live parts. Workspace shall be as required by NFPA 70 and 29 CFR 1926.403 unless otherwise indicated. Do not install at flush-mounted panelboards and similar equipment in finished spaces.

N. Operating Instruction Signs: Install instruction signs to facilitate proper operation and maintenance of electrical systems and items to which they connect. Install instruction signs with approved legend where instructions are needed for system or equipment operation.

O. Emergency Operating Instruction Signs: Install instruction signs with white legend on a red background with minimum ½ inch high letters for emergency instructions at equipment used for power transfer.

P. Each branch circuit conductor shall be labeled with the panel circuit designated 1” from termination to the circuit breaker with self-adhesive vinyl labels: Preprinted, flexible label laminated with a clear, weather- and chemical-resistant coating and matching wraparound adhesive tape for securing ends of legend label.

Q. Locations: In addition to installation of danger signs required by governing regulations and authorities, install appropriate danger signs at locations indicated and at locations subsequently identified as constituting dangers for persons in or about the project.

R. Critical Switches/Controls: Install danger signs on switches and similar controls, regardless of whether concealed or locked up, where untimely or inadvertent operation (by anyone) could result in significant danger to persons, or damage to or loss of property.

S. Electrical Equipment Rooms: Provide warning signage at the entrance to each such room; identify the hazard, and direct non-qualified personnel to stay away.

T. Identification for power receptacles, lighting switches, and data cover plates: Install an engraved phenolic plastic laminate nameplate on each unit of electrical equipment in the building, including central or master unit of each electrical system unless unit is specified with its own self-explanatory identification or signal system. Except as otherwise indicated, provide single line of text. Provide text matching terminology and numbering of the contract documents and shop drawings.

2.2 IDENTIFICATION SCHEDULE

A. Accessible Raceways and Metal-Clad Cables, 600 V or Less, for Service, Feeder, and Branch Circuits More Than 30 A, and 120 V to ground: Install labels at 20-foot maximum intervals.

B. Accessible Raceways and Cables within Buildings: Identify the covers of each junction and pull box of the following systems with self-adhesive vinyl labels with the wiring system legend and system voltage. System legends shall be as follows:

1. Emergency Power.
2. Power.
3. UPS.

C. Install instructional sign including the color-code for grounded and ungrounded conductors using adhesive-film-type labels.

D. Locations of Underground Lines: Identify with underground-line warning tape for power, lighting, communication, and control wiring and optical fiber cable.

1. Install underground-line warning tape for both direct-buried cables and cables in raceway.

E. Warning Labels for Indoor Cabinets, Boxes, and Enclosures for Power and Lighting: Self-adhesive warning labels.

1. Comply with 29 CFR 1910.145.
2. Identify system voltage with black letters on an orange background.
3. Apply to exterior of door, cover, or other access.
4. For equipment with multiple power or control sources, apply to door or cover of equipment including, but not limited to, the following:

   a. Power transfer switches.
   b. Controls with external control power connections.

F. Equipment Identification Labels: On each unit of equipment, install unique designation label that is consistent with wiring diagrams, schedules, and the Operation and Maintenance Manual. Apply labels to disconnect switches and protection equipment, central or master units, control panels, control stations, terminal cabinets, and racks of each system. Systems include power, lighting, control, communication, signal, monitoring, and alarm systems unless equipment is provided with its own identification.

1. Labeling Instructions:

a. Indoor Equipment: Self-adhesive, engraved, laminated acrylic or melamine label. Unless otherwise indicated, provide a single line of text with 1/2-inch- high letters on 1-1/2-inch- high label; where two lines of text are required, use labels 2 inches high.
b. Outdoor Equipment: Engraved, laminated acrylic or melamine label.
c. Elevated Components: Increase sizes of labels and letters to those appropriate for viewing from the floor.
d. Unless provided with self-adhesive means of attachment, fasten labels with appropriate mechanical fasteners that do not change the NEMA or NRTL rating of the enclosure.

END OF SECTION 16030

THIS PAGE INTENTIONALLY LEFT BLANK

SECTION 260923
LIGHTING CONTROL DEVICES

PART 1 - GENERAL

1.1 SUMMARY

A. Section Includes:

1. Time switches.
2. Photoelectric switches.
3. Indoor occupancy sensors.

1.2 ACTION SUBMITTALS

A. Product Data: For each type of product.

1.3 INFORMATIONAL SUBMITTALS

A. Field quality-control reports.

1.4 CLOSEOUT SUBMITTALS

A. Operation and maintenance data.

PART 2 – PRODUCTS

2.1 TIME SWITCHES

A. Manufacturers: Subject to compliance with requirements, provide products by the following:

1. Cooper Industries, Inc.
2. Intermatic, Inc.
3. Leviton Mfg. Company Inc.
4. NSi Industries LLC; TORK Products.
5. Watt Stopper

B. Electronic Time Switches: Solid state, programmable, with alphanumeric display; complying with UL 917.

1. Listed and labeled as defined in NFPA 70, by a qualified testing agency, and marked for intended location and application.

2. Contact Configuration: SPST, DPST, DPDT as required for the desired control scheme.
3. Contact Rating: 20-A ballast load, 120/240-V ac or 277 V ac.
4. Programs: Two on-off set points on a 24-hour schedule, allowing different set points for each day of the week and an annual holiday schedule that overrides the weekly operation on holidays.
5. Circuitry: Allow connection of a photoelectric relay as substitute for on-off function of a program.
6. Astronomic Time: All channels.
7. Automatic daylight savings time changeover.
8. Battery Backup: Not less than seven days reserve, to maintain schedules and time clock.

C. Electromechanical-Dial Time Switches are not approved.

2.2 OUTDOOR PHOTOELECTRIC SWITCHES

A. Provide TORK 2007 A for all outdoor photoelectric switches.

B. Description: Solid state, with SPST dry contacts rated for 1800 VA, to operate connected load, complying with ANSI C136.10 and EEI NEMA.

1. Listed and labeled as defined in NFPA 70, by a qualified testing agency, and marked for intended location and application.
2. Mounting: Twist lock complying with NEMA C136.10, with base.

2.3 INDOOR CEILING OCCUPANCY SENSORS

A. Manufacturers: Subject to compliance with requirements, provide products by one of the following:

1. Bryant Electric; a Hubbell company.
2. Cooper Industries, Inc.
3. Hubbell Building Automation, Inc.
4. Leviton Mfg. Company Inc.
5. Lithonia Lighting; Acuity Lighting Group, Inc.
6. Lutron Electronics Co., Inc.
7. Watt Stopper.

B. General Requirements for Sensors: Ceiling-mounted, dual technology type indoor occupancy sensors.

1. Listed and labeled as defined in NFPA 70, by a qualified testing agency, and marked for intended location and application.
2. Operation: Unless otherwise indicated, turn lights on when coverage area is occupied, and turn them off when unoccupied; with a time delay for turning lights off, adjustable over a minimum range of 3 to 30 minutes.
3. Provide manual toggle switch to allow manual means to turn load off. Provide dual switching in classrooms and computer labs, and research labs.
4. Power Pack: Dry contacts rated for 20-A ballast load at 120- and 277-V ac, for 13-tungsten at 120-V ac, and for 1 hp at 120-V ac. Sensor has 24-V dc, 150-mA, Class 2 power source, as defined by NFPA 70. Use when multiple sensors are required. Equal to DT-300 Series Dual Technology Ceiling Sensors.
5. Use line voltage sensor equal to Watt Stopper DT-355 Dual Technology Line Voltage Ceiling Sensor when only one sensor is required.
6. Automatic Light-Level Sensor: Adjustable from 10 to 300 fc; turn lights off when selected lighting level is present.
7. LEDs to indicate occupancy detection.
8. Provide five year warranty.

2.4 SWITCHBOX-MOUNTED OCCUPANCY SENSORS

A. Manufacturers: Subject to compliance with requirements, provide products by the following:

1. Bryant Electric; a Hubbell company.
2. Cooper Industries, Inc.
3. Hubbell Building Automation, Inc.
4. Leviton Mfg. Company Inc.
5. Lithonia Lighting; Acuity Lighting Group, Inc.

6. Lutron Electronics Co., Inc.
7. NSi Industries LLC; TORK Products.
8. Watt Stopper.

B. General Requirements for Sensors: Automatic-wall-switch occupancy sensor, suitable for mounting in a single gang switchbox.

1. Listed and labeled as defined in NFPA 70, by a qualified testing agency, and marked for intended location and application.
2. Operating Ambient Conditions: Dry interior conditions, 32 to 120 deg F.
3. Switch Rating: Not less than 800-VA fluorescent at 120 V and 1200-VA fluorescent at 277 V.

C. Wall-Switch Sensor:

1. Standard Range: 180-degree field of view, field adjustable from 180 to 40 degrees; with a minimum coverage area of 900 sq. ft.
2. Sensing Technology: Dual technology - PIR and ultrasonic.
3. Switch Type: Provide with choice of Auto-On or Manual-On.
4. Provide means for manual-Off override via pushbutton.
5. Voltage: Dual voltage, 120 and 277 V; dual-technology type.
6. Ambient-Light Override: Concealed, field-adjustable, light-level sensor from 10 to 150 fc. The switch prevents the lights from turning on when the light level is higher than the set point of the sensor.
7. Concealed, field-adjustable, "off" time-delay selector at up to 30 minutes.
8. Adaptive Technology: Self-adjusting circuitry detects and memorizes usage patterns of the space and helps eliminate false "off" switching.

2.5 LIGHTING CONTACTORS

A. Manufacturers: Subject to compliance with requirements, provide products by the following:

1. Allen-Bradley/Rockwell Automation.
2. ASCO Power Technologies, LP; a division of Emerson Electric Co.
3. Eaton Corporation.
4. General Electric Company; GE Consumer & Industrial - Electrical Distribution; Total Lighting Control.
5. Square D; a brand of Schneider Electric.

B. Description: Electrically operated and mechanically/electrically held (as required for the control type), complying with NEMA ICS 2 and UL 508.

1. Current Rating for Switching: Listing or rating consistent with type of load served, including tungsten filament, inductive, and high-inrush ballast (ballast with 15 percent or less total harmonic distortion of normal load current).
2. Fault Current Withstand Rating: Equal to or exceeding the available fault current at the point of installation.
3. Enclosure: Comply with NEMA 250.

2.6 CONDUCTORS AND CABLES

A. Power Wiring to Supply Side of Remote-Control Power Sources: Not smaller than No. 12 AWG. Comply with requirements in Division 26 Section "Low-Voltage Electrical Power Conductors and Cables".

PART 3 - EXECUTION

3.1 INSTALLATION

A. Install and aim sensors in locations to achieve not less than 90 percent coverage of areas indicated. Do not exceed coverage limits specified in manufacturer's written instructions.

B. Identify components and power and control wiring according to Division 26 Section "Identification for Electrical Systems".

C. Circuit controlled by occupancy sensors shall not be routed through a relay control panel.

D. Exterior lighting shall be controlled via photocell on/off and shall not be routed through a relay control panel.

E. Provide Training for all lighting control devices.

3.2 FIELD QUALITY CONTROL

A. Perform the following tests and inspections:

1. Operational Test: After installing time switches and sensors, and after electrical circuitry has been energized, start units to confirm proper unit operation.
2. Test and adjust controls and safeties. Replace damaged and malfunctioning controls and equipment.

B. Lighting control devices will be considered defective if they do not pass tests and inspections.

C. Prepare Test and Inspection reports.

END OF SECTION 260923

SECTION 262416

PANELBOARDS

PART 1 - GENERAL

1.1 RELATED DOCUMENTS

A. Drawings and general provisions of the Contract, including General and Supplementary Conditions and Division 01 Specification Sections, apply to this Section.

1.2 SUMMARY

A. Section Includes:

1. Distribution panelboards.
2. Lighting and appliance branch-circuit panelboards.
3. Load centers.
4. Electronic-grade panelboards.

1.3 DEFINITIONS

A. GFCI: Ground-fault circuit interrupter.

B. GFEP: Ground-fault equipment protection.

C. HID: High-intensity discharge.

D. MCCB: Molded-case circuit breaker.

1.4 ACTION SUBMITTALS

A. Product Data: For each type of panelboard.

1. Include materials, switching and overcurrent protective devices, accessories, and components indicated.
2. Include dimensions and manufacturers' technical data on features, performance, electrical characteristics, ratings, and finishes.

B. Shop Drawings: For each panelboard and related equipment.

1. Include dimensioned plans, elevations, sections, and details.
2. Show tabulations of installed devices with nameplates, conductor termination sizes, equipment features, and ratings.
3. Detail enclosure types including mounting and anchorage, environmental protection, knockouts, corner treatments, covers and doors, gaskets, hinges, and locks.
4. Detail bus configuration, current, and voltage ratings.
5. Short-circuit current rating of panelboards and overcurrent protective devices.
6. Detail features, characteristics, ratings, and factory settings of individual overcurrent protective devices and auxiliary components.
7. Include wiring diagrams for power, signal, and control wiring.
8. Include time-current coordination curves for each type and rating of overcurrent protective device included in panelboards. Submit on translucent log-log graft paper; include selectable ranges for each type of overcurrent protective device. Include an Internet link for electronic access to downloadable PDF of the coordination curves.
9. Provide 1/8” = 1’-0” scaled drawings with panelboard layouts in space of all electrical rooms and other areas where electrical panelboards are shown on the drawings. The Electrical Contractor shall be responsible for locating submitted equipment into allocated spaces as shown on the drawings. Provide a statement that final panelboard locations have been coordinated with Mechanical, Plumbing, and Fire Protection Contractors (as applicable), and that all requirements of working space and dedicated space, as described in NFPA 70, are met. Provide an official Request for Information if these requirements cannot be met.
10. Provide a statement that the Electrical Contractor has coordinated overcurrent device requirements with the other divisions which are supplying electrical equipment in this contract. Any changes shall be noted. Indicate that the wire and conduit sizes have been adjusted accordingly. Equipment shown in original Construction Documents is selected per basis of design equipment. Any changes shall be compensated by the division deviating from the base equipment. Coordinate overcurrent protection requirements with other divisions supplying the electrical equipment, prior to ordering final product.

1.5 INFORMATIONAL SUBMITTALS

A. Qualification Data: For qualified testing agency. See additional requirements in Division 01 Section “Quality Requirements”.

B. Field Quality-Control Reports:

1. Test procedures used.

2. Test results that comply with requirements.
3. Results of failed tests and corrective action taken to achieve test results that comply with requirements.

C. Panelboard Schedules: For installation in panelboards.

1.6 CLOSEOUT SUBMITTALS

A. Operation and Maintenance Data: For panelboards and components to include in emergency, operation, and maintenance manuals. In addition to items specified in Division 01 Section "Operation and Maintenance Data," include the following:

1. Manufacturer's written instructions for testing and adjusting overcurrent protective devices.
2. Time-current curves, including selectable ranges for each type of overcurrent protective device that allows adjustments.

1.7 MAINTENANCE MATERIAL SUBMITTALS

A. Furnish extra materials that match products installed and that are packaged with protective covering for storage and identified with labels describing contents. Provide a written statement to indicate quantities of each product that will be delivered to the Owner, at the time of Substantial Completion.

1. Keys: Two (2) spares for each type of panelboard cabinet lock.
2. Circuit Breakers Including GFCI and GFEP Types: Two (2) spares for each panelboard.
3. Fuses for Fused Switches: Equal to 10 percent of quantity installed for each size and type, but no fewer than three of each size and type.
4. Fuses for Fused Power-Circuit Devices: Equal to 10 percent of quantity installed for each size and type, but no fewer than three of each size and type.

1.8 QUALITY ASSURANCE

A. Manufacturer Qualifications: ISO 9001 or 9002 certified.

B. Testing Agency Qualifications: Member company of NETA or an NRTL.

1. Testing Agency's Field Supervisor: Currently certified by NETA to supervise on-site testing.

C. Source Limitations: Obtain panelboards, overcurrent protective devices, components, and accessories from single source from single manufacturer.

D. Product Selection for Restricted Space: Drawings indicate maximum dimensions for panelboards including clearances between panelboards and adjacent surfaces and other items. Comply with indicated maximum dimensions.

E. Electrical Components, Devices, and Accessories: Listed and labeled as defined in NFPA 70, by a qualified testing agency, and marked for intended location and application.

F. Comply with NEMA PB 1.

G. Comply with NFPA 70.

1.9 DELIVERY, STORAGE, AND HANDLING

A. Remove loose packing and flammable materials from inside panelboards; install temporary electric heating (250 W per panelboard) to prevent condensation.

B. Handle and prepare panelboards for installation according to NEMA PB 1.

1.10 FIELD CONDITIONS

A. Environmental Limitations:

1. Do not deliver or install panelboards until spaces are enclosed and weathertight, wet work in spaces is complete and dry, work above panelboards is complete, and temporary HVAC system is operating and maintaining ambient temperature and humidity conditions at occupancy levels during the remainder of the construction period.
2. Rate equipment for continuous operation under the following conditions unless otherwise indicated:

   a. Ambient Temperature: Not exceeding 23 degrees F to 104 degrees F.
   b. Altitude: Not exceeding 6600 feet.
   c. For any panelboards installed at exterior locations: Coordinate ambient requirements (average) at location with the equipment manufacturer. Provide thermally compensated circuit breakers if required. Provide written statement explaining the action resulting from coordination event with the manufacturer.

B. Service Conditions: NEMA PB 1, usual service conditions, as follows:

1. Ambient temperatures within limits specified.
2. Altitude not exceeding 6600 feet.

C. Interruption of Existing Electric Service:
(Applicable to projects where the scope requires modifications to the existing electrical service)

Do not interrupt electric service to facilities occupied by Owner or others unless permitted under the following conditions and then only after arranging to provide temporary electric service according to requirements indicated:

1. Notify Architect, Construction Manager, and the Owner no fewer than ten (10) days in advance of proposed interruption of electric service.
2. The contractor shall comply with all phasing instructions, as required by the Construction Drawings and as interpreted by the Construction Manager. The contractor shall ensure that the manager of the existing facility (the Owner) is fully aware of general schedule of the project, and any specific event that may affect the facility operation. The contractor shall coordinate with the facility manager on demolition and the construction schedule and provide required notifications prior to any power shutdown or commencing work in each existing area of interest. The contractor shall ensure that the facility manager is fully aware of the entire sequence of operation at the time of power outage. For any power shut-down, the contractor is encouraged to create a sequence of operation in writing, indicating schedule and the required actions from all parties involved. Shut-down shall be kept to minimum time. The contractor may have to work during "off" hours, as required and agreed with facility manager. Temporary power shall be provided to all equipment that must remain in operation.
3. Do not proceed with interruption of electric service without the Owner's written permission.
4. Comply with NFPA 70E.

1.11 WARRANTY

A. Manufacturer's Warranty: Manufacturer agrees to repair or replace panelboards that fail in materials or workmanship within specified warranty period.

1. Panelboard Warranty Period: Eighteen (18) months from date of Substantial Completion.

PART 2 - PRODUCTS

2.1 PANELBOARDS AND LOAD CENTERS COMMON REQUIREMENTS

A. Enclosures: Flush- and Surface-mounted cabinets.

1. Rated for environmental conditions at installed location.

a. Indoor Dry and Clean Locations: NEMA 250, Type 1.
b. Outdoor Locations: NEMA 250, Type 3R.
c. Kitchen and Wash-Down Areas: NEMA 250, Type 4X, stainless steel.
d. Other Wet or Damp Indoor Locations: NEMA 250, Type 4.

2. Height: 78 inches maximum to manually operable parts of overcurrent protection devices.
3. Hinged Front Cover: Entire front trim hinged to box and with standard door within hinged trim cover. Trims shall cover all live parts and shall have no exposed hardware.
4. Gutter Extension and Barrier: Same gage and finish as panelboard enclosure; integral with enclosure body. Arrange to isolate individual panel sections.
5. Finishes:

a. Panels and Trim: Steel, factory finished immediately after cleaning and pretreating with manufacturer's standard two-coat, baked-on finish consisting of prime coat and thermosetting topcoat.
b. Back Boxes: Galvanized steel.
c. Fungus Proofing: Permanent fungicidal treatment for overcurrent protective devices and other components.

6. Directory Card: The directory shall be protected by a transparent protective covering inside of a metal frame attached to the inside the panelboard door. An adhesive plastic sleeve is not acceptable.

B. Incoming Mains:

1. Location: Top or Bottom.
2. Main Breaker: Main lug interiors up to 400 amperes shall be field convertible to main breaker.

C. Phase, Neutral, and Ground Buses:

1. Material: Hard-drawn copper, 98 percent conductivity.

a. Bus shall be fully rated the entire length.

2. Interiors shall be factory assembled into a unit. Replacing switching and protective devices shall not disturb adjacent units or require removing the main bus connectors.
3. Equipment Ground Bus: Adequate for feeder and branch-circuit equipment grounding conductors; bonded to box.
4. Isolated Ground Bus: (If shown on drawings)
   Adequate for branch-circuit isolated ground conductors; insulated from box.
5. Full-Sized Neutral: Equipped with full-capacity bonding strap for service entrance applications. Mount electrically isolated from enclosure. Do not mount neutral bus in gutter.
6. Extra-Capacity Neutral Bus: (If shown on Drawings)
   Neutral bus rated 200 percent of phase bus and listed and labeled by an NRTL acceptable to authority having jurisdiction, as suitable for nonlinear loads in electronic-grade panelboards and others designated on Drawings. Connectors shall be sized for double-sized or parallel conductors as indicated on Drawings. Do not mount neutral bus in gutter.

D. Conductor Connectors: Suitable for use with conductor material and sizes.

1. Material: Hard-drawn copper, 98 percent conductivity.
2. Terminations shall allow use of 75 degrees C rated conductors without derating.
3. Size: Lugs suitable for indicated conductor sizes, with additional gutter space, if required, for larger conductors.
4. Main and Neutral Lugs: Mechanical type, with a lug on the neutral bar for each pole in the panelboard.
5. Ground Lugs and Bus-Configured Terminators: Mechanical type, with a lug on the bar for each pole in the panelboard.
6. Feed-Through Lugs: Mechanical type, suitable for use with conductor material. Locate at opposite end of bus from incoming lugs or main device.
7. Sub-feed (Double) Lugs: Mechanical type suitable for use with conductor material. Locate at same end of bus as incoming lugs or main device.
8. Gutter-Tap Lugs: Mechanical type suitable for use with conductor material and with matching insulating covers. Locate at same end of bus as incoming lugs or main device.
9. Extra-Capacity Neutral Lugs: (If extra capacity Neutral bus)
   Rated 200 percent of phase lugs mounted on extra-capacity neutral bus.

E. NRTL Label: Panelboards or load centers shall be labeled by an NRTL acceptable to authority having jurisdiction for use as service equipment with one or more main service disconnecting and overcurrent protective devices. Panelboards or load centers shall have meter enclosures, wiring, connections, and other provisions for utility metering. Coordinate with utility company for exact requirements.

F. Future Devices: Panelboards or load centers shall have mounting brackets, bus connections, filler plates, and necessary appurtenances required for future installation of devices.

1. Percentage of Future Space Capacity: Twenty (20) percent.

2. Where "space" in Panelboard Schedule is followed by specific circuit breaker size, it indicates that provisions shall be made in panelboard to accommodate for future installation of breaker sized as shown.

G. Panelboard Short-Circuit Current Rating: Fully rated to interrupt symmetrical short-circuit current available at terminals. Assembly listed by an NRTL for 100 percent interrupting capacity.

1. Panelboards and overcurrent protective devices rated 240 V or less shall have short-circuit ratings as shown on Drawings, but not less than 10,000 A rms symmetrical.
2. Panelboards and overcurrent protective devices rated above 240 V and less than 600 V shall have short-circuit ratings as shown on Drawings, but not less than 14,000 A rms symmetrical.

2.2 POWER PANELBOARDS

A. Manufacturers: Subject to compliance with requirements, provide comparable product by one of the following:

1. General Electric Company
2. Square D; a brand of Schneider Electric
3. Cutler Hammer, Eaton Corporation

B. Panelboards: NEMA PB 1, power and feeder distribution type.

C. Doors: Secured with vault-type latch with tumbler lock; keyed alike.

1. For doors more than 36 inches high, provide two latches, keyed alike.

D. Mains: As indicated on Drawings.

E. Branch Overcurrent Protective Devices for Circuit-Breaker Frame Sizes 125 A and Smaller: Bolt-on circuit breakers.

F. Branch Overcurrent Protective Devices for Circuit-Breaker Frame Sizes Larger Than 125 A: Bolt-on circuit breakers, Plug-in circuit breakers where individual positive-locking device requires mechanical release for removal.

2.3 LIGHTING AND APPLIANCE BRANCH-CIRCUIT PANELBOARDS

A. Manufacturers: Subject to compliance with requirements, provide comparable product by one of the following:

1. General Electric Company
2. Square D; a brand of Schneider Electric
3. Cutler Hammer, Eaton Corporation

B. Panelboards: NEMA PB 1, lighting and appliance branch-circuit type.

C. Mains: Circuit breaker or lugs only.

D. Branch Overcurrent Protective Devices: Bolt-on circuit breakers, replaceable without disturbing adjacent units.

E. Doors: Door-in-door construction with concealed hinges; secured with multipoint latch with tumbler lock; keyed alike. Outer door shall permit full access to the panel interior. Inner door shall permit access to breaker operating handles and labeling, but current carrying terminals and bus shall remain concealed.

F. Column-Type Panelboards: Single row of overcurrent devices with narrow gutter extension and overhead junction box equipped with ground and neutral terminal buses.

1. Doors: Concealed hinges secured with multipoint latch with tumbler lock; keyed alike.

2.4 DISCONNECTING AND OVERCURRENT PROTECTIVE DEVICES

A. Manufacturers: Subject to compliance with requirements, provide comparable product by one of the following:

1. General Electric Company
2. Square D; a brand of Schneider Electric
3. Cutler Hammer, Eaton Corporation

B. Molded-Case Circuit Breaker (MCCB): Comply with UL 489, with interrupting capacity to meet available fault currents.

1. Thermal-Magnetic Circuit Breakers:

a. Inverse time-current element for low-level overloads.
b. Instantaneous magnetic trip element for short circuits.

c. Adjustable magnetic trip setting for circuit-breaker frame sizes 250 A and larger.

2. Adjustable Instantaneous-Trip Circuit Breakers: Magnetic trip element with front-mounted, field-adjustable trip setting.
3. Electronic Trip Circuit Breakers:

   a. RMS sensing.
   b. Field-replaceable rating plug or electronic trip.
   c. Digital display of settings, trip targets, and indicated metering displays.
   d. Multi-button keypad to access programmable functions and monitored data.
   e. Ten-event, trip-history log. Each trip event shall be recorded with type, phase, and magnitude of fault that caused the trip.
   f. Integral test jack for connection to portable test set or laptop computer.
   g. Field-Adjustable Settings:

      1) Instantaneous trip.
      2) Long- and short-time pickup levels.
      3) Long and short time adjustments.
      4) Ground-fault pickup level, time delay, and I squared T response.

4. Current-Limiting Circuit Breakers: (If shown on Drawings)
   Frame sizes 400 A and smaller; let-through ratings less than NEMA FU 1, RK-5.
5. GFCI Circuit Breakers: (If shown on Drawings)
   Single- and double-pole configurations with Class A ground-fault protection (6-mA trip).
6. GFEP Circuit Breakers: (If shown on Drawings)
   Class B ground-fault protection (30-mA trip).
7. Arc-Fault Circuit Interrupter Circuit Breakers: (If shown on Drawings)
   Comply with UL 1699; 120/240-V, single-pole configuration.

8. Sub-feed Circuit Breakers: (If shown on Drawings)
   Vertically mounted.
9. MCCB Features and Accessories:

   a. Standard frame sizes, trip ratings, and number of poles.
   b. Breaker handle indicates tripped status.
   c. UL listed for reverse connection without restrictive line or load ratings.
   d. Lugs: Mechanical style, suitable for number, size, trip ratings, and conductor materials.
   e. Application Listing: Appropriate for application; Type SWD for switching fluorescent lighting loads; Type HID for feeding fluorescent and HID lighting circuits.

f. Ground-Fault Protection: Integrally mounted relay and trip unit with adjustable pickup and time-delay settings, push-to-test feature, and ground-fault indicator.
g. Communication Capability: Universal-mounted communication module with functions and features compatible with power monitoring and control system specified in Section 260913 "Electrical Power Monitoring and Control."
h. Shunt Trip: 120-V trip coil energized from separate circuit, set to trip at 75 percent of rated voltage.
i. Undervoltage Trip: Set to operate at 35 to 75 percent of rated voltage with field-adjustable 0.1- to 0.6-second time delay.
j. Rating Plugs: Three-pole breakers with ampere ratings greater than 150 (One hundred and fifty) amperes shall have interchangeable rating plugs or electronic adjustable trip units.
k. Auxiliary Contacts: One, SPDT switch with "a" and "b" contacts; "a" contacts mimic circuit-breaker contacts and "b" contacts operate in reverse of circuit-breaker contacts.
l. Alarm Switch: Single-pole, normally open contact that actuates only when circuit breaker trips.
m. Key Interlock Kit: Externally mounted to prohibit circuit-breaker operation; key shall be removable only when circuit breaker is in off position.
n. Zone-Selective Interlocking: Integral with electronic trip unit; for interlocking ground-fault protection function with other upstream or downstream devices.
o. Multipole units enclosed in a single housing with a single handle.
p. Handle Padlocking Device: Fixed attachment, for locking circuit-breaker handle in on or off position.
q. Handle Clamp: Loose attachment, for holding circuit-breaker handle in on position.

2.5 IDENTIFICATION

A. Identify field-installed conductors, interconnecting wiring, and components; provide warning signs complying with Division 26 Section "Identification for Electrical Systems."

B. Panelboard Label: Manufacturer's name and trademark, voltage, amperage, number of phases, and number of poles shall be located on the interior of the panelboard door.

C. Panelboard Nameplates: Label each panelboard with a nameplate complying with requirements for identification specified in Division 26 Section "Identification for Electrical Systems."

D. Breaker Labels: Faceplate shall list current rating, UL and IEC certification standards, and AIC rating.

E. Device Nameplates: Label each branch circuit device in distribution panelboards with a nameplate complying with requirements for identification specified in Division 26 Section "Identification for Electrical Systems."

F. Circuit Directory: Computer-generated circuit directory mounted in metal frame in door, with transparent plastic protective cover.

1. Circuit directory shall identify specific purpose with detail sufficient to distinguish it from all other circuits.

2. Create a directory to indicate installed circuit loads; incorporate Owner's final room designations.

2.6 ACCESSORY COMPONENTS AND FEATURES

A. Accessory Set: Include tools and miscellaneous items required for overcurrent protective device test, inspection, maintenance, and operation.

B. Portable Test Set: For testing functions of solid-state trip devices without removing from panelboard. Include relay and meter test plugs suitable for testing panelboard meters and switchboard class relays.

PART 3 - EXECUTION

3.1 EXAMINATION

A. Verify actual conditions with field measurements prior to ordering panelboards to verify that equipment fits in allocated space in, and comply with, minimum required clearances specified in NFPA 70.

B. Receive, inspect, handle, and store panelboards according to NEMA PB 1.1.

C. Examine panelboards before installation. Reject panelboards that are damaged, rusted, or have been subjected to water saturation.

D. Examine elements and surfaces to receive panelboards for compliance with installation tolerances and other conditions affecting performance of the Work.

E. Proceed with installation only after unsatisfactory conditions have been corrected.

3.2 INSTALLATION

A. Coordinate layout and installation of panelboards and components with other construction that penetrates walls or is supported by them, including electrical and other types of equipment, raceways, piping, encumbrances to workspace clearance requirements, and adjacent surfaces. Maintain required workspace clearances and required clearances for equipment access doors and panels.

B. Comply with NECA 1.

C. Install panelboards and accessories according to NEMA PB 1.1.

D. Equipment Mounting:

1. Install panelboards on cast-in-place concrete equipment base(s). Comply with requirements for equipment bases and foundations specified in Division 03 Cast-in-Place Concrete.
2. Attach panelboard to the vertical finished or structural surface behind the panelboard.

E. Temporary Lifting Provisions: Remove temporary lifting eyes, channels, and brackets and temporary blocking of moving parts from panelboards.

F. Mount top of trim 90 inches above finished floor unless otherwise indicated.

G. Mount panelboard cabinet plumb and rigid without distortion of box.

H. Mount recessed panelboards with fronts uniformly flush with wall finish and mating with back box.

I. Mount surface-mounted panelboards to steel slotted supports 5/8 inch in depth. Orient steel slotted supports vertically.

J. Install overcurrent protective devices and controllers not already factory installed.

1. Set field-adjustable, circuit-breaker trip ranges.
2. Tighten bolted connections and circuit breaker connections using calibrated torque wrench or torque screwdriver per manufacturer's written instructions.

K. Make grounding connections and bond neutral for services and separately derived systems to ground. Make connections to grounding electrodes, separate grounds for isolated ground bars, and connections to separate ground bars.

L. Install filler plates in unused spaces.

M. Stub four 1-inch empty conduits from panelboard into accessible ceiling space or space designated to be ceiling space in the future. Stub four 1-inch empty conduits into raised floor space or below slab not on grade.

N. Wiring Gutters: Feeder and Branch circuit conductors are sized for circuit ampacity and anticipated voltage drop and may be larger than the allowable ampacities per NFPA 70 Table 310-15(B)(16). Contractor shall provide cabinets with gutters, sized as required to accommodate the conductors and connections being installed.

O. Arrange conductors in gutters into groups and bundle and wrap with wire ties.

P. Mount spare fuse cabinet in accessible location.

Q. All panelboards shall be clean of dust and construction debris prior to substantial completion. Any bent or scratched covers shall be replaced with new factory equipment.

3.3 IDENTIFICATION

A. Identify field-installed conductors, interconnecting wiring, and components; install warning signs complying with requirements in Section 260553 "Identification for Electrical Systems."

B. Create a directory to indicate installed circuit loads; incorporate Owner's final room designations. Obtain approval before installing. Handwritten directories are not acceptable. Install directory inside of a metal frame attached to the inside of the panelboard door.

C. Panelboard Nameplates: Label each panelboard with a nameplate complying with requirements for identification specified in Section 260553 "Identification for Electrical Systems."

D. Device Nameplates: Label each branch circuit device in power panelboards with a nameplate complying with requirements for identification specified in Section 260553 "Identification for Electrical Systems."

E. Install warning signs complying with requirements in Section 260553 "Identification for Electrical Systems" identifying source of remote circuit.

3.4 FIELD QUALITY CONTROL

A. Perform tests and inspections.

1. Manufacturer's Field Service: Engage a factory-authorized service representative to inspect components, assemblies, and equipment installations, including connections, and to assist in testing.

B. Acceptance Testing Preparation:

1. Test insulation resistance for each panelboard bus, component, connecting supply, feeder, and control circuit.
2. Test continuity of each circuit.

C. Tests and Inspections:

1. Perform each visual and mechanical inspection and electrical test stated in NETA Acceptance Testing Specification. Certify compliance with test parameters.
2. Correct malfunctioning units on-site, where possible, and retest to demonstrate compliance; otherwise, replace with new units and retest.
3. Perform the following infrared scan tests and inspections and prepare reports:

a. Initial Infrared Scanning: After Substantial Completion, but not more than 60 days after Final Acceptance, perform an infrared scan of each panelboard. Remove front panels so joints and connections are accessible to portable scanner.
b. Follow-up Infrared Scanning: Perform an additional follow-up infrared scan of each panelboard 11 months after date of Substantial Completion.
c. Instruments and Equipment:

1) Use an infrared scanning device designed to measure temperature or to detect significant deviations from normal values. Provide calibration record for device.

D. Panelboards will be considered defective if they do not pass tests and inspections.

E. Prepare test and inspection reports, including a certified report that identifies panelboards included and that describes scanning results. Include notation of deficiencies detected, remedial action taken, and observations after remedial action.

3.5 ADJUSTING

A. Adjust moving parts and operable components to function smoothly and lubricate as recommended by manufacturer.

B. Set field-adjustable circuit-breaker trip ranges as indicated.

3.6 PROTECTION

A. Temporary Heating: Prior to energizing panelboards, apply temporary heat to maintain temperature according to manufacturer's written instructions.

END OF SECTION 262416

SECTION 262726

WIRING DEVICES

PART 1 - GENERAL

1.1 SUMMARY

A. Section Includes:

1. Receptacles, receptacles with integral GFCI, and associated device plates.
2. Weather-resistant receptacles.
3. Snap switches and wall-box dimmers.
4. Solid-state fan speed controls.
5. Wall-switch and exterior occupancy sensors.
6. Communications outlets.

1.2 ADMINISTRATIVE REQUIREMENTS

A. Coordination:

1. Receptacles for owner furnished equipment - match plug configurations.

1.3 ACTION SUBMITTALS

A. Product Data: For each type of product.

B. Shop Drawings: List of legends and description of materials and process used for marking wall plates.

1.4 INFORMATIONAL SUBMITTALS

A. Field quality-control reports.

1.5 CLOSEOUT SUBMITTALS

A. Operation and maintenance data.

PART 2 - PRODUCTS

2.1 MANUFACTURERS

A. Manufacturers: Subject to compliance with requirements, provide products from one of the following:

1. Cooper Wiring Devices; Division of Cooper Industries, Inc. (Cooper).
2. Hubbell Incorporated; Wiring Device-Kellems (Hubbell).
3. Leviton Mfg. Company Inc. (Leviton).
4. Pass & Seymour/Legrand (Pass & Seymour).

B. Source Limitations: Obtain each type of wiring device and associated wall plate from single source from single manufacturer.

2.2 GENERAL WIRING-DEVICE REQUIREMENTS

A. Wiring Devices, Components, and Accessories: Listed and labeled as defined in NFPA 70, by a qualified testing agency, and marked for intended location and application.

B. Comply with NFPA 70.

2.3 STRAIGHT-BLADE RECEPTACLES

A. Convenience Receptacles, 125 V, 20 A: Comply with NEMA WD 1, NEMA WD 6 Configuration 5-20R, UL 498, and FS W-C-596.

1. Products: Subject to compliance with requirements, provide products by one of the following:

a. Cooper; 5351 (single), CR5362 (duplex).
b. Hubbell; HBL5351 (single), HBL5352 (duplex).
c. Leviton; 5891 (single), 5352 (duplex).
d. Pass & Seymour; 5361 (single), 5362 (duplex).

2.4 GFCI RECEPTACLES

A. General Description:

1. Straight blade, non-feed-through type.
2. Comply with NEMA WD 1, NEMA WD 6, UL 498, UL 943 Class A, and FS W-C- 596.
3. Include indicator light that shows when the GFCI has malfunctioned and no longer provides proper GFCI protection.

B. Duplex GFCI Convenience Receptacles, 125 V, 20 A:

1. Products: Subject to compliance with requirements, provide products by one of the following:

   a. Cooper.
   b. Hubbell.
   c. Pass & Seymour.
   d. Leviton.

2.5 TOGGLE SWITCHES

A. Comply with NEMA WD 1, UL 20, and FS W-S-896.

B. Switches, 120/277 V, 20 A:

1. Products: Subject to compliance with requirements, provide one of the following available products that may be incorporated into the Work include, but are not limited to, the following:

   a. Single Pole:

      1) Cooper; AH1221.
      2) Hubbell; hBL1221.
      3) Leviton; 1221-2.
      4) Pass & Seymour; CSB20AC1.

   b. Two Pole:

      1) Cooper; AH1222.

2) Hubbell; HBL1222.
3) Leviton; 1222-2.
4) Pass & Seymour; CSB20AC2.

c. Three Way:

1) Cooper; AH1223.
2) Hubbell; HBL1223.
3) Leviton; 1223-2.
4) Pass & Seymour; CSB20AC3.

d. Four Way:

1) Cooper; AH1224.
2) Hubbell; HBL1224.
3) Leviton; 1224-2.
4) Pass & Seymour; CSB20AC4.

C. Pilot-Light Switches, 20 A:

1. Products: Subject to compliance with requirements, provide one of the following available products that may be incorporated into the Work include, but are not limited to, the following:

a. Cooper; AH1221PL for 120 and 277 V.
b. Hubbell; HBL1201PL for 120 and 277 V.
c. Leviton; 1221-LH1.
d. Pass & Seymour; PS20AC1RPL for 120 V, PS20AC1RPL7 for 277 V.

2. Description: Single pole, with neon-lighted handle, illuminated when switch is "off."

D. Key-Operated Switches, 120/277 V, 20 A:

1. Products: Subject to compliance with requirements, provide one of the following available products that may be incorporated into the Work include, but are not limited to, the following:

a. Cooper; AH1221L.
b. Hubbell; HBL1221L.
c. Leviton; 1221-2L.
d. Pass & Seymour; PS20AC1-L.

2. Description: Single pole, with factory-supplied key in lieu of switch handle.

2.6 DECORATOR-STYLE DEVICES

A. Convenience Receptacles: Square face, 125 V, 15 A; comply with NEMA WD 1, NEMA WD 6 Configuration 5-15R, and UL 498.

1. Products: Subject to compliance with requirements, provide one of the following available products that may be incorporated into the Work include, but are not limited to, the following:

a. Cooper; 6252.
b. Hubbell; DR15.
c. Leviton; 16252.
d. Pass & Seymour; 26252.

B. GFCI, Non-Feed-Through Type, Convenience Receptacles: Square face, 125 V, 15 A; comply with NEMA WD 1, NEMA WD 6 Configuration 5-15R, UL 498, and UL 943 Class A.

1. Products: Subject to compliance with requirements, provide one of the following available products that may be incorporated into the Work include, but are not limited to, the following:

a. Cooper; VGF15.
b. Hubbell; GF15LA.
c. Leviton; 8599.
d. Pass & Seymour; 1594.

C. Toggle Switches, Square Face, 120/277 V, 15 A: Comply with NEMA WD 1, UL 20, and FS W-S-896.

1. Products: Subject to compliance with requirements, provide one of the following available products that may be incorporated into the Work include, but are not limited to, the following:

a. Cooper; 7621 (single pole), 7623 (three way).
b. Hubbell; DS115 (single pole), DS315 (three way).
c. Leviton; 56291-2 (single pole), 5623-2 (three way).
d. Pass & Seymour; 2621 (single pole), 2623 (three way).

D. Lighted Toggle Switches, Square Face, 120 V, 15 A: Comply with NEMA WD 1 and UL 20.

1. Products: Subject to compliance with requirements, provide one of the following available products that may be incorporated into the Work include, but are not limited to, the following:

   a. Cooper; 7631 (single pole), 7633 (three way).
   b. Hubbell; DS120IL (single pole), DS320 (three way).
   c. Leviton; 5631-2 (single pole), 5633-2 (three way).
   d. Pass & Seymour; 2625 (single pole), 2626 (three way).

2. Description: With neon-lighted handle, illuminated when switch is "off."

2.7 WALL-BOX DIMMERS

A. Dimmer Switches: Modular, full-wave, solid-state units with integral, quiet on-off switches, with audible frequency and EMI/RFI suppression filters.

B. Control: Continuously adjustable slider toggle switch; with single-pole or three-way switching. Comply with UL 1472.

C. Fluorescent Lamp Dimmer Switches: Modular; compatible with dimmer ballasts; trim potentiometer to adjust low-end dimming; dimmer-ballast combination capable of consistent dimming with low end not greater than 20 percent of full brightness.

D. LED Dimmer Switches: Compatible with dimmer LED drivers, capable of consistent dimming with low end not greater than 10 percent of full brightness. In new construction, utilize LED dimmable fixtures with compatible LED dimmer.

2.8 WALL PLATES

A. Single and combination types shall match corresponding wiring devices.

   1. Plate-Securing Screws: Metal with head color to match plate finish.
   2. Material for Finished Spaces: Coordinate with architect.
   3. Material for Unfinished Spaces: Galvanized steel.
   4. Material for Damp Locations: Cast aluminum while in use cover listed and labeled for use in wet and damp locations.
   5. Material for kitchens or food processing areas – stainless steel.

B. Wet-Location, Weatherproof Cover Plates: NEMA 250, complying with Type 3R, weather-resistant, die-cast aluminum while in use cover.

2.9 FINISHES

A. Device Color:

1. Wiring Devices Connected to Normal Power System: Coordinate with architect.
2. Wiring Devices Connected to Emergency Power System: Red.
3. TVSS Devices: Blue.

B. Wall Plate Color: Coordinate with architect.

PART 3 – EXECUTION

3.1 INSTALLATION

A. Comply with NECA 1, including mounting heights listed in that standard, unless otherwise indicated.

B. Coordination with Other Trades:

1. Protect installed devices and their boxes. Do not place wall finish materials over device boxes and do not cut holes for boxes with routers that are guided by riding against outside of boxes.
2. Keep outlet boxes free of plaster, drywall joint compound, mortar, cement, concrete, dust, paint, and other material that may contaminate the raceway system, conductors, and cables.
3. Install device boxes in brick or block walls so that the cover plate does not cross a joint unless the joint is troweled flush with the face of the wall.
4. Install wiring devices after all wall preparation, including painting, is complete.

C. Conductors:

1. Do not strip insulation from conductors until right before they are spliced or terminated on devices.
2. Strip insulation evenly around the conductor using tools designed for the

purpose. Avoid scoring or nicking of solid wire or cutting strands from stranded wire.

3. The length of free conductors at outlets for devices shall meet provisions of NFPA 70, Article 300, without pigtails.
4. Existing Conductors:

   a. Cut back and pigtail, or replace all damaged conductors.
   b. Straighten conductors that remain and remove corrosion and foreign matter.
   c. Pigtailing existing conductors is permitted, provided the outlet box is large enough, meets NEC.

D. Device Installation:

1. Replace devices that have been in temporary use during construction and that were installed before building finishing operations were complete.
2. Keep each wiring device in its package or otherwise protected until it is time to connect conductors.
3. Do not remove surface protection, such as plastic film and smudge covers, until the last possible moment.
4. Connect devices to branch circuits using pigtails that are not less than 6 inches in length.
5. When there is a choice, use side wiring with binding-head screw terminals. Wrap solid conductor tightly clockwise, two-thirds to three-fourths of the way around terminal screw.
6. Use a torque screwdriver when a torque is recommended or required by manufacturer.
7. When conductors larger than No. 12 AWG are installed on 15- or 20-A circuits, splice No. 12 AWG pigtails for device connections.
8. Tighten unused terminal screws on the device.
9. When mounting into metal boxes, remove the fiber or plastic washers used to hold device-mounting screws in yokes, allowing metal-to-metal contact.
10. Do not install GFI type devices where readily inaccessible such as behind water fountain housings are where food prep equipment blocks access. In these instances, provide a GFI type circuit breaker protecting a standard device.

E. Receptacle Orientation:

1. Install ground pin of vertically mounted receptacles up, and on horizontally mounted receptacles to the right.

F. Device Plates: Do not use oversized or extra-deep plates. Repair wall finishes and remount outlet boxes when standard device plates do not fit flush or do not cover rough wall opening.

G. Dimmers:

1. Install dimmers within terms of their listing.
2. Verify that dimmers used for fan speed control are listed for that application.
3. Install unshared neutral conductors on line and load side of dimmers according to manufacturers' device listing conditions in the written instructions.

H. Arrangement of Devices: Unless otherwise indicated, mount flush, with long dimension vertical and with grounding terminal of receptacles on top. Group adjacent switches under single, multigang wall plates.

I. Adjust locations of service poles to suit arrangement of partitions and furnishings.

3.2 FIELD QUALITY CONTROL

A. Perform the following tests and inspections:

1. Test Instruments: Use instruments that comply with UL 1436.
2. Test Instrument for Convenience Receptacles: Digital wiring analyzer with digital readout or illuminated digital-display indicators of measurement.

B. Tests for Convenience Receptacles:

1. Line Voltage: Acceptable range is 115 to 126 V.
2. Percent Voltage Drop under 15-A Load: A value of 5 percent or higher is unacceptable.
3. Ground Impedance: Values of up to 2 ohms are acceptable.
4. GFCI Trip: Test for tripping values specified in UL 1436 and UL 943.
5. Using the test plug, verify that the device and its outlet box are securely mounted.
6. Tests shall be diagnostic, indicating damaged conductors, high resistance at the circuit breaker, poor connections, inadequate fault current path, defective devices, or similar problems. Correct circuit conditions, remove malfunctioning units and replace with new ones, and retest as specified above.

C. Wiring device will be considered defective if it does not pass tests and inspections.

D. Prepare test and inspection reports.

END OF SECTION 262726

SECTION 262813

FUSES

PART 1 - GENERAL

1.1 SUMMARY

A. Section Includes: Cartridge fuses rated 600-V ac and less for use in control circuits, enclosed switches, fusible panelboards, switchboards, enclosed controllers, and motor- control centers.

1.2 ACTION SUBMITTALS

A. Product Data: For each type of product indicated.

1.3 CLOSEOUT SUBMITTALS

A. Operation and maintenance data.

1.4 QUALITY ASSURANCE

A. Electrical Components, Devices, and Accessories: Listed and labeled as defined in NFPA 70, by a qualified testing agency, and marked for intended location and application.

B. Comply with NEMA FU 1 for cartridge fuses.

C. Comply with NFPA 70.

PART 2 – PRODUCTS

2.1 MANUFACTURERS

A. Manufacturers: Subject to compliance with requirements, provide products by one of the following manufacturers:

1. Cooper Bussmann, Inc.
2. Edison Fuse, Inc.

3. Ferraz Shawmut, Inc.
4. Littelfuse, Inc.

2.2 CARTRIDGE FUSES

A. Characteristics: NEMA FU 1, nonrenewable cartridge fuses with voltage ratings consistent with circuit voltages.

PART 3 - EXECUTION

3.1 FUSE APPLICATIONS

A. Service Entrance: Class L, time delay.

B. Feeders: Class L, fast acting.

C. Motor Branch Circuits: Class RK5, time delay.

D. Other Branch Circuits: Class RK5, time delay.

E. Control Circuits: Class CC, time delay.

F. All pedestrian post top light fixtures, parking lot light fixtures, and roadway light fixtures shall be individually fused. Provide Bussmann FNQ 10 Amp, time delay fuse, in Little Fuse LEB AB series (rated for #6 AWG line side and #10 AWG load side) single-pole breakaway in-line fuse holder. Fuse holder shall be located in the pole's handhole. No exceptions.

3.2 INSTALLATION

A. Install fuses in fusible devices. Arrange fuses so rating information is readable without removing fuse.

3.3 IDENTIFICATION

A. Install labels complying with requirements for identification specified in Division 26 Section "Identification for Electrical Systems" and indicating fuse

replacement information on inside door of each fused switch and adjacent to each fuse block and holder.

END OF SECTION 262813

SECTION 262816 - ENCLOSED SWITCHES AND CIRCUIT BREAKERS

PART 1 - GENERAL

1.1 SUMMARY

A. Section Includes:

1. Fusible switches.
2. Nonfusible switches.
3. Shunt trip switches.
4. Molded-case circuit breakers.
5. Enclosures.

1.2 DEFINITIONS

A. NC: Normally closed.

B. NO: Normally open.

C. SPDT: Single pole, double throw.

1.3 ACTION SUBMITTALS

A. Product Data: For each type of enclosed switch, circuit breaker, accessory, and component indicated.

B. Shop Drawings: For enclosed switches and circuit breakers. Include plans, elevations, sections, details, and attachments to other work.

1. Wiring Diagrams: For power, signal, and control wiring.

1.4 INFORMATIONAL SUBMITTALS

A. Field quality-control reports.

1.5 CLOSEOUT SUBMITTALS

A. Operation and maintenance data.

1.6 QUALITY ASSURANCE

A. Electrical Components, Devices, and Accessories: Listed and labeled as defined in NFPA 70, by a qualified testing agency, and marked for intended location and application.

B. Comply with NFPA 70.

PART 2 – PRODUCTS

2.1 FUSIBLE SWITCHES

A. Manufacturers: Subject to compliance with requirements, provide products by one of the following:

1. Eaton Electrical Inc.; Cutler-Hammer Business Unit.
2. General Electric Company; GE Consumer & Industrial - Electrical Distribution.
3. Siemens Energy & Automation, Inc.
4. Square D; a brand of Schneider Electric.

B. Type HD, Heavy Duty, Single Throw, 600-V ac, 1200 A thru 400 A: UL 98 and NEMA KS 1, horsepower rated, with clips or bolt pads to accommodate specified fuses, lockable handle with capability to accept three padlocks, and interlocked with cover in closed position.

C. Type HD, Heavy Duty, Single Throw, 600-V ac, 200 A and Smaller: UL 98 and NEMA KS 1, horsepower rated, with clips or bolt pads to accommodate specified fuses, lockable handle with capability to accept one padlock, and interlocked with cover in closed position.

D. Accessories:

1. Equipment Ground Kit: Internally mounted and labeled for copper ground conductors.
2. Neutral Kit: Internally mounted; insulated, capable of being grounded and bonded; labeled for copper neutral conductors.
3. Class R Fuse Kit: Provides rejection of other fuse types when Class R fuses are specified.

4. Lugs: Suitable for number, size, and conductor material.
5. Service-Rated Switches: Labeled for use as service equipment.

2.2 NONFUSIBLE SWITCHES

A. Manufacturers: Subject to compliance with requirements, provide products by one of the following:

1. Eaton Electrical Inc.; Cutler-Hammer Business Unit.
2. General Electric Company; GE Consumer & Industrial - Electrical Distribution.
3. Siemens Energy & Automation, Inc.
4. Square D; a brand of Schneider Electric.

B. Type HD, Heavy Duty, Single Throw, 600-V ac, 1200 A thru 400 A: UL 98 and NEMA KS 1, horsepower rated, lockable handle with capability to accept three padlocks, and interlocked with cover in closed position.

C. Type HD, Heavy Duty, Single Throw, 600-V ac, 200 A and Smaller: UL 98 and NEMA KS 1, horsepower rated, lockable handle with capability to accept one padlock, and interlocked with cover in closed position.

D. Accessories:

1. Equipment Ground Kit: Internally mounted and labeled for copper ground conductors.
2. Neutral Kit: Internally mounted; insulated, capable of being grounded and bonded; labeled for copper neutral conductors.
3. Lugs: Suitable for number, size, and conductor material.

2.3 SHUNT TRIP SWITCHES

A. Manufacturers: Subject to compliance with requirements, provide products by one of the following:

1. Cooper Bussmann, Inc.
2. Ferraz Shawmut, Inc.
3. Littelfuse, Inc.

B. General Requirements: Comply with ASME A17.1, UL 50, and UL 98, with 200-kA interrupting and short-circuit current rating when fitted with Class J fuses.

C. Switches: Three-pole, horsepower rated, with integral shunt trip mechanism and

Class J fuse block; lockable handle with capability to accept three padlocks; interlocked with cover in closed position.

D. Accessories:

1. Oiltight key switch for key-to-test function.
2. Oiltight ON pilot light.
3. Isolated neutral lug.
4. Mechanically interlocked auxiliary contacts that change state when switch is opened and closed.
5. Form C alarm contacts that change state when switch is tripped.
6. Three-pole, double-throw, fire-safety and alarm relay; with appropriate coil voltage.
7. Three-pole, double-throw, fire-alarm voltage monitoring relay complying with NFPA 72.

2.4 MOLDED-CASE CIRCUIT BREAKERS

A. Manufacturers: Subject to compliance with requirements, provide products by one of the following:

1. Eaton Electrical Inc.; Cutler-Hammer Business Unit.
2. General Electric Company; GE Consumer & Industrial - Electrical Distribution.
3. Siemens Energy & Automation, Inc.
4. Square D; a brand of Schneider Electric.

B. General Requirements: Comply with UL 489, NEMA AB 1, and NEMA AB 3, with interrupting capacity to comply with available fault currents.

C. Thermal-Magnetic Circuit Breakers: Inverse time-current element for low-level overloads and instantaneous magnetic trip element for short circuits. Adjustable magnetic trip setting for circuit-breaker frame sizes 250 A and larger.

D. Electronic Trip Circuit Breakers: Field-replaceable rating plug, rms sensing, with the following field-adjustable settings:

1. Instantaneous trip.
2. Long- and short-time pickup levels.
3. Long- and short-time time adjustments.
4. Ground-fault pickup level, time delay, and I^2t response.

E. Current-Limiting Circuit Breakers: Frame sizes 400 A and smaller, and let-through ratings less than NEMA FU 1, RK-5.

F. Features and Accessories:

1. Standard frame sizes, trip ratings, and number of poles.
2. Lugs: Suitable for number, size, trip ratings, and conductor material.
3. Ground-Fault Protection: Comply with UL 1053; integrally mounted type with mechanical ground-fault indicator; relay with adjustable pickup and time-delay settings, push-to-test feature, internal memory, and shunt trip unit; and three- phase, zero-sequence current transformer/sensor.
4. Shunt Trip: Trip coil energized from separate circuit, with coil-clearing contact.
5. Auxiliary Contacts: Two SPDT switches with "a" and "b" contacts; "a" contacts mimic circuit-breaker contacts, "b" contacts operate in reverse of circuit-breaker contacts.
6. Alarm Switch: One NC contact that operates only when circuit breaker has tripped.

2.5 ENCLOSURES

A. Enclosed Switches and Circuit Breakers: NEMA AB 1, NEMA KS 1, NEMA 250, and UL 50, to comply with environmental conditions at installed location.

1. Indoor, Dry and Clean Locations: NEMA 250, Type 1.
2. Outdoor Locations: NEMA 250, Type 3R.
3. Wash-Down Areas: NEMA 250, Type 4X, stainless steel.
4. Other Wet or Damp, Indoor Locations: NEMA 250, Type 4.
5. Indoor Locations Subject to Dust, Falling Dirt, and Dripping Noncorrosive Liquids: NEMA 250, Type 12.

PART 3 - EXECUTION

3.1 INSTALLATION

A. Install individual wall-mounted switches and circuit breakers with tops at uniform height unless otherwise indicated.

B. Temporary Lifting Provisions: Remove temporary lifting eyes, channels, and brackets and temporary blocking of moving parts from enclosures and components.

C. Install fuses in fusible devices.

D. Comply with NECA 1.

3.2 IDENTIFICATION

A. Comply with requirements in Division 26 Section "Identification for Electrical Systems".

1. Identify field-installed conductors, interconnecting wiring, and components; provide warning signs.
2. Label each enclosure with engraved metal or laminated-plastic nameplate.
3. Indicate manufacturer's name, amperage, voltage, phase, number of wires, short-circuit rating, ampacity interrupting capacity rating, and Arc Flash Warning label in accordance with NEC.

3.3 FIELD QUALITY CONTROL

A. Perform tests and inspections.

B. Acceptance Testing Preparation:

1. Test insulation resistance for each enclosed switch and circuit breaker, component, connecting supply, feeder, and control circuit.
2. Test continuity of each circuit.

C. Tests and Inspections:

1. Perform each visual and mechanical inspection and electrical test stated in NETA Acceptance Testing Specification. Certify compliance with test parameters.
2. Correct malfunctioning units on-site, where possible, and retest to demonstrate compliance; otherwise, replace with new units and retest.

D. Enclosed switches and circuit breakers will be considered defective if they do not pass tests and inspections.

E. Prepare test and inspection reports, including a certified report that identifies enclosed switches and circuit breakers and that describes scanning results. Include notation of deficiencies detected, remedial action taken, and observations after remedial action.

END OF SECTION 262816

SECTION 264313

TRANSIENT-VOLTAGE SUPPRESSION FOR LOW-VOLTAGE ELECTRICAL POWER C I RCUITS

PART 1 - GENERAL

1.1 SUMMARY

A. Section includes field-mounted TVSS for low-voltage (120 to 600 V) power distribution and control equipment.

1.2 ACTION SUBMITTALS

A. Product Data: For each type of product indicated. Include unit dimensions, rated capacities, operating weights, electrical characteristics, furnished specialties, and accessories.

1.3 INFORMATIONAL SUBMITTALS

A. Field quality-control reports.

B. Warranty information.

C. Drawings: Provide shop drawings indicating mounting provisions, installation instructions, and wiring diagrams.

1.4 CLOSEOUT SUBMITTALS

A. Operation and maintenance data.

1.5 QUALITY ASSURANCE

A. Electrical Components, Devices, and Accessories: Listed and labeled as defined in NFPA 70, by a testing agency, and marked for intended location and application.

B. Comply with IEEE C62.41.2 and test devices according to IEEE C62.45.

C. Comply with NEMA LS 1.

D. Comply with UL 1283 and UL 1449.

E. Comply with NFPA 70.

1.6 WARRANTY

A. Special Warranty: Manufacturer's standard form in which manufacturer agrees to repair or replace components of surge suppressors that fail in materials or workmanship within specified warranty period.

1. Warranty Period: Five years from date of Substantial Completion.

PART 2 - PRODUCTS

2.1 SERVICE ENTRANCE SUPPRESSORS – Type 1

A. Manufacturers: Subject to compliance with requirements, provide products by one of the following:

1. Advanced Protection Technologies Inc. (APT).
2. Current Technology Inc.; Danaher Power Solutions.
3. LEA International.
4. Leviton Mfg. Company Inc.
5. PQ Protection.

B. Surge Protection Devices:

1. LED indicator lights for power and protection status.
2. Comply with UL 1449.
3. Fabrication using bolted compression lugs for internal wiring.
4. Integral disconnect switch when connected to line side of main service switch.
5. Redundant suppression circuits.
6. Arrangement with wire connections to phase buses, neutral bus, and ground bus.
7. LED indicator lights for power and protection status.

C. Peak Single-Impulse Surge Current Rating: 160 kA per mode/320 kA per phase.

D. Protection modes and UL 1449 SVR for grounded wye circuits with 480Y/277 V or 208Y/120 V, 3-phase, 4-wire circuits shall be as follows:

1. Line to Neutral: 800 V for 480Y/277 V / 400 V for 208Y/120 V.
2. Line to Ground: 800 V for 480Y/277 V / 400 V for 208Y/120 V.
3. Neutral to Ground: 800 V for 480Y/277 V / 400 V for 208Y/120 V.

E. Protection modes and UL 1449 SVR for 240/120 V, single-phase, 3-wire circuits shall be as follows:

1. Line to Neutral: 400 V.
2. Line to Ground: 400 V.
3. Neutral to Ground: 400 V.

F. Protection modes and UL 1449 SVR for 240/120-V, 3-phase, 4-wire circuits with high leg shall be as follows:

1. Line to Neutral: 400 V, 800 V from high leg.
2. Line to Ground: 400 V.
3. Neutral to Ground: 400 V.

G. Protection modes and UL 1449 SVR for 240 V, 480 V, or 600 V, 3-phase, 3-wire, delta circuits shall be as follows:

1. Line to Line: 2000 V for 480 V / 1000 V for 240 V.
2. Line to Ground: 2000 V for 480 V / 1000 V for 240 V.

H. Units integral with the switchboard are not allowed.

2.2 PANELBOARD SUPPRESSORS – Type 2.

A. Manufacturers: Subject to compliance with requirements, provide products by one of the following:

1. Advanced Protection Technologies Inc. (APT).
2. Current Technology Inc.; Danaher Power Solutions.
3. LEA International.
4. Leviton Mfg. Company Inc.
5. PQ Protection.

B. Surge Protection Devices:

1. LED indicator lights for power and protection status.
2. Fabrication using bolted compression lugs for internal wiring.
3. Redundant suppression circuits.
4. Arrangement with wire connections to phase buses, neutral bus, and ground bus via panel mounted 30 Amp, 3 Pole, circuit breaker.
5. LED indicator lights for power and protection status.

C. Peak Single-Impulse Surge Current Rating: 80 kA per mode/160 kA per phase.

D. Protection modes and UL 1449 SVR for grounded wye circuits with 480Y/277 V or 208Y/120 V, 3-phase, 4-wire circuits shall be as follows:

1. Line to Neutral: 800 V for 480Y/277 V / 400 V for 208Y/120 V.
2. Line to Ground: 800 V for 480Y/277 V / 400 V for 208Y/120 V.
3. Neutral to Ground: 800 V for 480Y/277 V / 400 V for 208Y/120 V.

E. Protection modes and UL 1449 SVR for 240/120-V, single-phase, 3-wire circuits shall be as follows:

1. Line to Neutral: 400 V.
2. Line to Ground: 400 V.
3. Neutral to Ground: 400 V.

F. Protection modes and UL 1449 SVR for 240/120-V, 3-phase, 4-wire circuits with high leg shall be as follows:

1. Line to Neutral: 400 V, 800 V from high leg.
2. Line to Ground: 400 V.
3. Neutral to Ground: 400 V.

G. Protection modes and UL 1449 SVR for 240 V or 480 V, 3-phase, 3-wire, delta circuits shall be as follows:

1. Line to Line: 2000 V for 480 V / 1000 V for 240 V.
2. Line to Ground: 1500 V for 480 V / 800 V for 240 V.

H. Units integral to panelboards are not allowed.

2.3 ENCLOSURES

A. Indoor Enclosures: NEMA 250 Type 1.

B. Outdoor Enclosures: NEMA 250 Type 3R.

PART 3 – EXECUTION

3.1 INSTALLATION

A. Provide Type 1 TVSS devices at all service entrances on load side of main switch, with ground lead bonded to service entrance ground.

B. Provide Type 2 TVSS devices for panelboards and auxiliary panels with conductors between suppressor and points of attachment as short and straight as possible. Do not exceed manufacturer's recommended lead length. Do not bond neutral and ground. Locations shall include all exterior panels, lab panels, panels serving exterior lighting and equipment loads, and process equipment panels. Coordinate with USF Project Manager for other panels requiring Type 2 connection prior to design.

1. Provide multiple pole, 30-A circuit breaker as a dedicated disconnecting means for Type 2 TVSS unless otherwise indicated.

3.2 FIELD QUALITY CONTROL

A. Perform tests and inspections.

1. Manufacturer's Field Service: Engage a factory-authorized service representative to inspect components, assemblies, and equipment installations, including connections, and to assist in testing.

B. Tests and Inspections:

1. Perform each visual and mechanical inspection and electrical test stated in NETA ATS, "Surge Arresters, Low-Voltage Surge Protection Devices" Section. Certify compliance with test parameters.
2. After installing TVSS devices but before electrical circuitry has been energized, test for compliance with requirements.
3. Complete startup checks according to manufacturer's written instructions.

C. TVSS device will be considered defective if it does not pass tests and inspections.

D. Prepare test and inspection reports.

3.3 STARTUP SERVICE

A. Do not energize or connect service entrance equipment or panelboards to their sources until TVSS devices are installed and connected.

B. Do not perform insulation resistance tests of the distribution wiring equipment with the TVSS installed. Disconnect before conducting insulation resistance tests, and reconnect immediately after the testing is over.

3.4 DEMONSTRATION

A. Engage a factory-authorized service representative to train USF Physical Plant Department maintenance personnel to maintain TVSS devices.

END OF SECTION 264313

SECTION 265119

INTERIOR LIGHTING

PART 1 - GENERAL

1.1 RELATED DOCUMENTS

A. Drawings and general provisions of the Contract, including General and Supplementary Conditions and Division 01 Specification Sections, apply to this Section.

1.2 SUMMARY

A. Section includes the following types of LED luminaires:

1. Cylinder.
2. Downlight.
3. Highbay, linear.
4. Linear industrial.
5. Lowbay.
6. Parking garage.
7. Recessed linear.
8. Strip light.
9. Surface mount, linear.
10. Surface mount, nonlinear.
11. Suspended, linear.
12. Suspended, nonlinear.
13. Materials.
14. Finishes.
15. Luminaire support.

B. Related Requirements:

1. Section 260923 "Lighting Control Devices" for automatic control of lighting, including time switches, photoelectric relays, occupancy sensors, and multipole lighting relays and contactors.
2. Section 260926 "Lighting Control Panelboards" for panelboards used for lighting control.

3. Section 260933 "Central Dimming Controls" or Section 260936 "Modular Dimming Controls" for architectural dimming systems and for fluorescent dimming controls with dimming ballasts specified in interior lighting Sections.
4. Section 260943.16 "Addressable-Luminaire Lighting Controls" and Section 260943.23 "Relay-Based Lighting Controls" for manual or programmable control systems with low-voltage control wiring or data communication circuits.

1.3 DEFINITIONS

A. CCT: Correlated color temperature.

B. CRI: Color Rendering Index.

C. Fixture: See "Luminaire."

D. IP: International Protection or Ingress Protection Rating.

E. LED: Light-emitting diode.

F. Lumen: Measured output of lamp and luminaire, or both.

G. Luminaire: Complete lighting unit, including lamp, reflector, and housing.

1.4 ACTION SUBMITTALS

A. Product Data: For each type of product.

1. Arrange in order of luminaire designation.
2. Include data on features, accessories, and finishes.
3. Finishes shall be coordinated with the Architect.
4. Include physical description and dimensions of luminaires.
5. Include emergency lighting units, including batteries and chargers.
6. Include life, output (lumens, CCT, and CRI), and energy efficiency data.
7. Photometric data and adjustment factors based on laboratory tests, complying with IES Lighting Measurements Testing and Calculation Guides, of each luminaire type. The adjustment factors shall be for lamps and accessories identical to those indicated for the luminaire as applied in this Project. Conform to IES LM-79 and IES LM-80.

    a. Manufacturers' Certified Data: Photometric data certified by manufacturer's laboratory with a current accreditation under the National Voluntary Laboratory Accreditation Program for Energy Efficient Lighting Products.

B. Shop Drawings:

1. Include plans, elevations, sections, and mounting and attachment details.
2. Include details of luminaire assemblies. Indicate dimensions, weights, loads, required clearances, method of field assembly, components, and location and size of each field connection.
3. Include diagrams for power, signal, and control wiring.

C. Samples for Substitutions:

1. Include samples of luminaires for substituted luminaires whose model numbers and manufacturers are not specifically called on the drawings, or have not been prior approved during the bid or permit process.

D. Product Schedule: For luminaires and lamps. Use same designations indicated on Drawings.

1.5 INFORMATIONAL SUBMITTALS

A. Qualification Data: For testing laboratory providing photometric data for luminaires.

B. Product Certificates: For each type of luminaire.

C. Product Test Reports: For each luminaire, for tests performed by manufacturer and witnessed by a qualified testing agency.

D. Sample warranty.

1.6 CLOSEOUT SUBMITTALS

A. Operation and Maintenance Data: For luminaires and lighting systems to include in operation and maintenance manuals.

1. Provide a list of all lamp types used on Project; use ANSI and manufacturers' codes.

1.7 MAINTENANCE MATERIAL SUBMITTALS

A. Furnish extra materials that match products installed and that are packaged with protective covering for storage and identified with labels describing contents.

1. Lamps: Ten for every 100 of each type and rating installed. Furnish at least one of each type.

2. Diffusers and Lenses: One for every 100 of each type and rating installed. Furnish at least one of each type.
3. Globes and Guards: One for every 20 of each type and rating installed. Furnish at least one of each type.

1.8 QUALITY ASSURANCE

A. Luminaire Photometric Data Testing Laboratory Qualifications: Luminaire manufacturer's laboratory that is accredited under the NVLAP for Energy Efficient Lighting Products.

B. Provide luminaires from a single manufacturer for each luminaire type.

C. All lighting fixtures shall be manufactured, furnished, and installed in compliance with all government agencies having jurisdiction. All fixtures shall bear the appropriate UL (or ETL) and IBEW identifications.

D. Mockups (If specifically requested on Drawings): For interior luminaires in room or module mockups, complete with power and control connections.

1. Obtain Architect's approval of luminaires in mockups before starting installations.
2. Maintain mockups during construction in an undisturbed condition as a standard for judging the completed Work.
3. Approval of mockups does not constitute approval of deviations from the Contract Documents contained in mockups unless Architect specifically approves such deviations in writing.
4. Subject to compliance with requirements, approved mockups may become part of the completed Work if undisturbed at time of Substantial Completion.

1.9 DELIVERY, STORAGE, AND HANDLING

A. Protect finishes of exposed surfaces by applying a strippable, temporary protective covering before shipping.

1.10 WARRANTY

A. Warranty: Manufacturer and Installer agree to repair or replace components of luminaires that fail in materials or workmanship within specified warranty period.

B. Warranty Period: Five years from date of Substantial Completion.

PART 2 - PRODUCTS

2.1 LUMINAIRE REQUIREMENTS

A. Electrical Components, Devices, and Accessories: Listed and labeled as defined in NFPA 70, by a qualified testing agency, and marked for intended location and application.

B. Standards (As applicable for installation location):

1. ENERGY STAR certified.
2. NRTL Compliance: Luminaires for hazardous locations shall be listed and labeled for indicated class and division of hazard by an NRTL.
3. FM Global Compliance: Luminaires for hazardous locations shall be listed and labeled for indicated class and division of hazard by FM Global.
4. UL Listing: Listed for damp location.
5. Recessed luminaires shall comply with NEMA LE 4.
6. User Replaceable Lamps (if applicable):

a. Bulb shape complying with ANSI C78.79.
b. Lamp base complying with ANSI C81.61 or IEC 60061-1.

C. See Luminaire Schedule on Drawings for specific requirements for each type of luminaires.

D. Internal driver.

E. Nominal Operating Voltage: As indicated on Luminaire Schedule.

2.2 MATERIALS

A. Metal Parts:

1. Free of burrs and sharp corners and edges.
2. Sheet metal components shall be steel unless otherwise indicated.
3. Form and support to prevent warping and sagging.

B. Doors, Frames, and Other Internal Access: Smooth operating, free of light leakage under operating conditions, and designed to permit re-lamping without use of tools. Designed to prevent doors, frames, lenses, diffusers, and other components from falling accidentally during re-lamping and when secured in operating position.

C. Diffusers and Globes: See Luminaire Schedule.

D. Factory-Applied Labels: Comply with UL 1598. Include recommended lamps. Locate labels where they will be readily visible to service personnel, but not seen from normal viewing angles when lamps are in place.

1. Label shall include the following lamp characteristics:

a. "USE ONLY" and include specific lamp type.
b. Lamp diameter, shape, size, wattage, and coating.
c. CCT and CRI for all luminaires.

2.3 METAL FINISHES

A. Variations in finishes are unacceptable in the same piece. Variations in finishes of adjoining components are acceptable if they are within the range of approved Samples and if they can be and are assembled or installed to minimize contrast.

2.4 LUMINAIRE SUPPORT

A. Comply with requirements in Section 260529 "Hangers and Supports for Electrical Systems" for channel and angle iron supports and nonmetallic channel and angle supports.

B. Single-Stem Hangers: 1/2-inch steel tubing with swivel ball fittings and ceiling canopy. Finish same as luminaire.

C. Wires: ASTM A 641/A 641 M, Class 3, soft temper, zinc-coated steel, 12 gage.

D. Rod Hangers: 3/16-inch minimum diameter, cadmium-plated, threaded steel rod.

E. Hook Hangers: Integrated assembly matched to luminaire, line voltage, and equipment with threaded attachment, cord, and locking-type plug.

PART 3 - EXECUTION

3.1 EXAMINATION

A. Examine substrates, areas, and conditions, with Installer present, for compliance with requirements for installation tolerances and other conditions affecting performance of the Work.

B. Examine roughing-in for luminaire to verify actual locations of luminaire and electrical connections before luminaire installation. Proceed with installation only after unsatisfactory conditions have been corrected.

3.2 TEMPORARY LIGHTING

A. If approved by the Engineer, use selected permanent luminaires for temporary lighting. When construction is sufficiently complete, clean luminaires used for temporary lighting and install new lamps.

3.3 INSTALLATION

A. Comply with NECA 1.

B. Install luminaires level, plumb, and square with ceilings and walls unless otherwise indicated.

C. Install lamps in each luminaire (if applicable).

D. Supports:

1. Sized and rated for luminaire weight.
2. Able to maintain luminaire position after cleaning and re-lamping.
3. Provide support for luminaire without causing deflection of ceiling or wall.
4. Luminaire mounting devices shall be capable of supporting a horizontal force of 100 percent of luminaire weight and vertical force of 400 percent of luminaire weight.

E. Flush-Mounted Luminaire Support:

1. Secured to outlet box.
2. Attached to ceiling structural members at four points equally spaced around circumference of luminaire.
3. Trim ring flush with finished surface.

F. Wall-Mounted Luminaire Support:

1. Per industry standard. Coordinate with Structural Engineer.
2. Do not attach luminaires directly to gypsum board.

G. Ceiling-Mounted Luminaire Support:

1. Ceiling mount with minimum of two 5/32-inch diameter aircraft cable supports adjustable to 120 inches in length.

H. Suspended Luminaire Support:

1. Pendants and Rods: Where longer than 48 inches, brace to limit swinging.
2. Stem-Mounted, Single-Unit Luminaires: Suspend with twin-stem hangers. Support with approved outlet box and accessories that hold stem and provide damping of luminaire oscillations. Support outlet box vertically to building structure using approved devices.
3. Continuous Rows of Luminaires: Use tubing or stem for wiring at one point and tubing or rod for suspension for each unit length of luminaire chassis, including one at each end.
4. Do not use ceiling grid as support for pendant luminaires. Connect support wires or rods to building structure.

I. Ceiling-Grid-Mounted Luminaires:

1. Secure to any required outlet box.
2. Secure luminaire to the luminaire opening using approved fasteners in a minimum of four locations, spaced near corners of luminaire.
3. Use approved devices and support components to connect luminaire to ceiling grid and building structure in a minimum of four locations, spaced near corners of luminaire.

J. Comply with requirements in Section 260519 "Conductors and Cables" for wiring connections.

3.4 IDENTIFICATION

A. Identify system components, wiring, cabling, and terminals. Comply with requirements for identification specified in Section 260553 "Identification for Electrical Systems."

3.5 FIELD QUALITY CONTROL

A. Perform the following tests and inspections:

1. Operational Test: After installing luminaires, switches, and accessories, and after electrical circuitry has been energized, test units to confirm proper operation.
2. Test for Emergency Lighting: Interrupt power supply to demonstrate proper operation. Verify transfer from normal power to battery power and retransfer to normal.

B. Luminaire will be considered defective if it does not pass operation tests and inspections.

C. Prepare test and inspection reports.

3.6 STARTUP SERVICE

A. Comply with requirements for startup as indicated in Drawings.

3.7 ADJUSTING

A. Occupancy Adjustments: When requested within 12 months of date of Substantial Completion, provide on-site assistance in adjusting the direction of aim of luminaires to suit occupied conditions. Make up to two visits to Project during other-than-normal hours for this purpose. Some of this work may be required during hours of darkness.

1. During adjustment visits, inspect all luminaires. Replace lamps or luminaires that are defective.
2. Parts and supplies shall be manufacturer's authorized replacement parts and supplies.
3. Adjust the aim of luminaires in the presence of the Architect.

END OF SECTION 265119

SECTION 265600 - EXTERIOR LIGHTING

PART 1 - GENERAL

1.1 SUMMARY

A. Section Includes:

1. Exterior luminaires with lamps, LED drivers, and induction lamp generators.
2. Poles and accessories.

1.2 STRUCTURAL ANALYSIS CRITERIA FOR POLE SELECTION

A. Wind Load: Pressure of wind on pole and luminaire and banners and banner arms, calculated and applied as stated in the Florida Building Code. Poles and fixtures assemblies shall meet 145 mph.

1.3 ACTION SUBMITTALS

A. Product Data: For each luminaire, pole, and support component, arranged in order of lighting unit designation. Include data on features, accessories, and finishes.

B. Submit photometric calculations superimposed onto the site plan or floor plan for all exterior lighting. The photometric levels shall be legible when plotted to scale. Provide separate photometric calculations for emergency egress lighting.

C. Lighting fixture schedule indicating the fixture manufacturer, catalog number, voltage, input watts, lamp and color identification, mounting, and description shall be included on the electrical documents in a “Fixture Schedule”.

1.4 QUALITY ASSURANCE

A. Electrical Components, Devices, and Accessories: Listed and labeled as defined in NFPA 70, by a qualified testing agency, and marked for intended location and application.

B. Comply with IEEE C2, "National Electrical Safety Code”.

C. Comply with NFPA 70.

1.5 WARRANTY

A. LED fixtures, lighting emitting diodes, and drivers: Manufacturer shall provide five year warranty against defects in materials and workmanship for all products. Project contractor shall replace defective fixtures and components during the first year of warranty without additional compensation.

B. Induction fixtures, lamps, coupler, and generators: Manufacturer shall provide five year warranty against defects in materials and workmanship for all products. Project contractor shall replace defective fixtures and components during the first year of warranty without additional compensation.

C. Warranty period shall begin on date of substantial completion.

PART 2 – PRODUCTS

2.1 MANUFACTURERS

A. Manufacturers and products are subject Owner review and approval.

1. Provide electronic (PDF format) cutsheets of proposed fixtures with reflected ceiling plan at design development.
2. Provide electronic (PDF format) cutsheets of specified fixtures at 100% Construction Documents.

2.2 GENERAL REQUIREMENTS FOR LUMINAIRES

A. Luminaires shall comply with UL 1598 and be listed and labeled for installation in wet locations by an NRTL acceptable to authorities having jurisdiction.

B. All exterior light fixtures shall be full cutoff type, dark sky friendly, to reduce light pollution.

C. Metal Parts: Free of burrs and sharp corners and edges.

D. Sheet Metal Components: Corrosion-resistant aluminum unless otherwise indicated. Form and support to prevent warping and sagging.

E. Housings: Rigidly formed, weather- and light-tight aluminum enclosures that will not warp, sag, or deform in use.

F. Doors, Frames, and Other Internal Access: Smooth operating, free of light leakage under operating conditions, and designed to permit relamping without use of tools. Designed to prevent doors, frames, lenses, diffusers, and other components from falling accidentally during relamping and when secured in operating position. Doors shall be removable for cleaning or replacing lenses.

G. Exposed Hardware Material: Stainless steel.

H. Plastic Parts: High resistance to yellowing and other changes due to aging, exposure to heat, and UV radiation.

I. Light Shields: Metal baffles, factory installed and field adjustable, arranged to block light distribution to indicated portion of normally illuminated area or field.

J. Lenses and Refractors Gaskets: Use heat- and aging-resistant resilient gaskets to seal and cushion lenses and refractors in luminaire doors.

K. Provide factory mounted in-line surge project in all exterior roadway fixtures, parking lot fixtures, and pedestrian/sidewalk fixtures. Surge protector shall be equal to PQ Protection Series and shall meet Department of Transportation standards.

L. All exterior fixtures shall be aluminum. Factory-applied finish for aluminum luminaires shall comply with NAAMM's "Metal Finishes Manual for Architectural and Metal Products" for recommendations for applying and designating finishes.

1. Finish designations prefixed by AA comply with the system established by the Aluminum Association for designating aluminum finishes.
2. Natural Satin Finish: Provide fine, directional, medium satin polish (AA-M32); buff complying with AA-M20; and seal aluminum surfaces with clear, hard-coat wax.

M. Factory-Applied Labels: Comply with UL 1598. Include recommended lamps and ballasts, driver or generator. Labels shall be located where they will be readily visible to service personnel, but not seen from normal viewing angles when lamps are in place.

PART 3 - EXECUTION

3.1 LUMINAIRE INSTALLATION

A. Install lamps in each luminaire.

B. Provide final aiming and focusing of luminaires that require field adjustment or aiming under the direction of owner. Aiming and focusing luminaires shall be performed during non-daylight hours.

C. Provide adjustment of photoelectric device to prevent false operation of relay by artificial light sources, favoring a north orientation.

3.2 GROUND MOUNTED LUMINAIRES

A. All landscape up lighting, building floodlighting, sign lighting, flag up lighting shall be LED type floodlight mounted on concrete base.

B. Install on concrete base with top of concrete 6” above finish grade. Cast conduit or support into base, and finish by troweling and rubbing smooth.

C. Concrete base diameter shall provide protection for the luminaire from lawn equipment, but in no case be smaller than 18” diameter, or less than 6” from furthest end of luminaire.

END OF SECTION 265600

SECTION 283111

DIGITAL, ADDRESSABLE FIRE-ALARM SYSTEM

PART 1 - GENERAL

1.1 RELATED DOCUMENTS

A. Drawings and general provisions of the Contract, including General and Supplementary Conditions and Division 01 Specification Sections, apply to this Section.

1.2 SUMMARY

A. Section Includes:

1. Fire-alarm control unit.
2. Manual fire-alarm boxes.
3. System smoke detectors.
4. Nonsystem smoke detectors.
5. Heat detectors.
6. Notification appliances.
7. Firefighters' two-way telephone communication service.
8. Magnetic door holders.
9. Remote annunciator.
10. Addressable interface device.
11. Digital alarm communicator transmitter.
12. Radio alarm transmitter.
13. System printer.

1.3 DEFINITIONS

A. LED: Light-emitting diode.

B. NICET: National Institute for Certification in Engineering Technologies.

1.4 SYSTEM DESCRIPTION

A. Noncoded, UL-certified addressable system, with multiplexed signal transmission, dedicated to fire-alarm service only.

1.5 ACTION SUBMITTALS

A. Product Data: For each type of product indicated.

B. Shop Drawings: For fire-alarm system. Include plans, elevations, sections, details, and attachments to other work.

1. Comply with recommendations in the "Documentation" Section of the "Fundamentals of Fire Alarm Systems" Chapter in NFPA 72.
2. Include voltage drop calculations for notification appliance circuits.
3. Include battery-size calculations.
4. Include performance parameters and installation details for each detector, verifying that each detector is listed for complete range of air velocity, temperature, and humidity possible when air-handling system is operating.
5. Include plans, sections, and elevations of heating, ventilating, and air-conditioning ducts, drawn to scale and coordinating installation of duct smoke detectors and access to them. Show critical dimensions that relate to placement and support of sampling tubes, detector housing, and remote status and alarm indicators. Locate detectors according to manufacturer's written recommendations.
6. Include voice/alarm signaling-service equipment rack or console layout, grounding schematic, amplifier power calculation, and single-line connection diagram.
7. Include floor plans to indicate final outlet locations showing address of each addressable device. Show size and route of cable and conduits.

C. General Submittal Requirements:

1. Submittals shall be approved by authorities having jurisdiction prior to submitting them to Architect.

2. Shop Drawings shall be prepared by persons with the following qualifications:

    a. Trained and certified by manufacturer in fire-alarm system design.
    b. NICET-certified fire-alarm technician.
    c. Licensed or certified by authorities having jurisdiction.

D. Delegated-Design Submittal: For smoke and heat detectors indicated to comply with performance requirements and design criteria, including analysis data signed and sealed by the qualified professional engineer responsible for their preparation.

1. Drawings showing the location of each smoke and heat detector, ratings of each, and installation details as needed to comply with listing conditions of the detector.
2. Design Calculations: Calculate requirements for selecting the spacing and sensitivity of detection, complying with NFPA 72.

1.6 INFORMATIONAL SUBMITTALS

A. Qualification Data: For qualified Installer.

B. Field quality-control reports.

1.7 CLOSEOUT SUBMITTALS

A. Operation and Maintenance Data: For fire-alarm systems and components to include in emergency, operation, and maintenance manuals. In addition to items specified in Division 01 Section "Operation and Maintenance Data,"deliver copies to authorities having jurisdiction and include the following:

1. Comply with the "Records" Section of the "Inspection, Testing and Maintenance" Chapter in NFPA 72.
2. Provide "Record of Completion Documents" according to NFPA 72 article "Permanent Records" in the "Records" Section of the "Inspection, Testing and Maintenance" Chapter.
3. Record copy of site-specific software.
4. Provide "Maintenance, Inspection and Testing Records" according to NFPA 72 article of the same name and include the following:

    a. Frequency of testing of installed components.
    b. Frequency of inspection of installed components.
    c. Requirements and recommendations related to results of maintenance.
    d. Manufacturer's user training manuals.

5. Manufacturer's required maintenance related to system warranty requirements.
6. Abbreviated operating instructions for mounting at fire-alarm control unit.

B. Software and Firmware Operational Documentation:

1. Software operating and upgrade manuals.
2. Program Software Backup: On magnetic media or compact disk, complete with data files.
3. Device address list.
4. Printout of software application and graphic screens.

1.8 QUALITY ASSURANCE

A. Installer Qualifications: Personnel shall be trained and certified by manufacturer for installation of units required for this Project.

B. Installer Qualifications: Installation shall be by personnel certified by NICET as fire-alarm technician.

C. Source Limitations for Fire-Alarm System and Components: Obtain fire-alarm system from single source from single manufacturer. Components shall be compatible with, and operate as, an extension of existing system.

D. Electrical Components, Devices, and Accessories: Listed and labeled as defined in NFPA 70, by a qualified testing agency, and marked for intended location and application.

1.9 SOFTWARE SERVICE AGREEMENT

A. Comply with UL 864.

B. Technical Support: Beginning with Substantial Completion, provide software support for two years.

C. Upgrade Service: Update software to latest version at Project completion. Install and program software upgrades that become available within two years from date of Substantial Completion. Upgrading software shall include operating system. Upgrade shall include new or revised licenses for use of software.

1. Provide 30 days' notice to Owner to allow scheduling and access to system and to allow Owner to upgrade computer equipment if necessary.

PART 2 - PRODUCTS

2.1 MANUFACTURERS

A. Manufacturers: Subject to compliance with requirements:
1. Fire Control Instruments, Inc.; a Honeywell company.
2. Fire Lite Alarms; a Honeywell company.
3. NOTIFIER; a Honeywell company.
4. Siemens Building Technologies, Inc.; Fire Safety Division.
5. Silent Knight; a Honeywell company.
6. SimplexGrinnell.
7. Edwards.

2.2 SYSTEMS OPERATIONAL DESCRIPTION

A. Fire-alarm signal initiation shall be by one or more of the following devices:

1. Manual stations.
2. Heat detectors.
3. Smoke detectors.
4. Duct smoke detectors.
5. Verified automatic alarm operation of smoke detectors.
6. Automatic sprinkler system water flow.
7. Heat detectors in elevator shaft and pit.
8. Fire-extinguishing system operation.
9. Fire standpipe system.

B. Fire-alarm signal shall initiate the following actions:

1. Continuously operate alarm notification appliances.
2. Identify alarm at fire-alarm control unit and remote annunciators.
3. Transmit an alarm signal to the remote alarm receiving station.
4. Unlock electric door locks in designated egress paths.
5. Release fire and smoke doors held open by magnetic door holders.
6. Activate voice/alarm communication system.
7. Switch heating, ventilating, and air-conditioning equipment controls to fire-alarm mode.
8. Activate smoke-control system (smoke management) at firefighter smoke-control system panel.
9. Activate stairwell and elevator-shaft pressurization systems.
10. Close smoke dampers in air ducts of designated air-conditioning duct systems.
11. Recall elevators to primary or alternate recall floors.

12. Activate emergency lighting control.
13. Activate emergency shutoffs for gas and fuel supplies.
14. Record events in the system memory.
15. Record events by the system printer.

C. Supervisory signal initiation shall be by one or more of the following devices and actions:

1. Valve supervisory switch.
2. Low-air-pressure switch of a dry-pipe sprinkler system.
3. Elevator shunt-trip supervision.

D. System trouble signal initiation shall be by one or more of the following devices and actions:

1. Open circuits, shorts, and grounds in designated circuits.
2. Opening, tampering with, or removing alarm-initiating and supervisory signal-initiating devices.
3. Loss of primary power at fire-alarm control unit.
4. Ground or a single break in fire-alarm control unit internal circuits.
5. Abnormal ac voltage at fire-alarm control unit.
6. Break in standby battery circuitry.
7. Failure of battery charging.
8. Abnormal position of any switch at fire-alarm control unit or annunciator.
9. Fire-pump power failure, including a dead-phase or phase-reversal condition.
10. Low-air-pressure switch operation on a dry-pipe or preaction sprinkler system.

E. System Trouble and Supervisory Signal Actions: Initiate notification appliance and annunciate at fire-alarm control unit and remote annunciators. Record the event on system printer.

2.3 FIRE-ALARM CONTROL UNIT

A. General Requirements for Fire-Alarm Control Unit:

1. Field-programmable, microprocessor-based, modular, power-limited design with electronic modules, complying with UL 864 and listed and labeled by an NRTL.

   a. System software and programs shall be held in flash electrically erasable programmable read-only memory (EEPROM), retaining the information through failure of primary and secondary power supplies.
   b. Include a real-time clock for time annotation of events on the event recorder and printer.

2. Addressable initiation devices that communicate device identity and status.

   a. Smoke sensors shall additionally communicate sensitivity setting.
   b. Temperature sensors shall additionally test for and communicate the sensitivity range of the device.

3. Addressable control circuits for operation of mechanical equipment.

B. Elevator Recall:

1. Smoke detectors at the following locations shall initiate automatic elevator recall.

   a. Elevator lobby detectors except the lobby detector on the designated floor.
   b. Smoke detector in elevator machine room.
   c. Smoke detectors in elevator hoistway.

2. Elevator lobby detectors located on the designated recall floors shall be programmed to move the cars to the alternate recall floor.
3. Water-flow alarm connected to sprinkler in an elevator shaft and elevator machine room shall shut down elevators associated with the location without time delay.

   a. Water-flow switch associated with the sprinkler in the elevator pit may have a delay to allow elevators to move to the designated floor.

C. Door Controls: Door hold-open devices that are controlled by smoke detectors at doors in smoke barrier walls shall be connected to fire-alarm system.

D. Remote Smoke-Detector Sensitivity Adjustment: Controls shall select specific addressable smoke detectors for adjustment, display their current status and sensitivity settings, and change those settings. Allow controls to be used to program repetitive, time-scheduled, and automated changes in sensitivity of specific detector groups. Record sensitivity adjustments and sensitivity-adjustment schedule changes in system memory, and print out the final adjusted values on system printer.

E. Transmission to Remote Alarm Receiving Station: Automatically transmit alarm, supervisory, and trouble signals to a remote alarm station.

F. Printout of Events: On receipt of signal, print alarm, supervisory, and trouble events. Identify zone, device, and function. Include type of signal (alarm, supervisory, or trouble) and date and time of occurrence. Differentiate alarm signals from all other printed indications. Also print system reset event, including same information for device, location, date, and time. Commands initiate the printing of a list of existing alarm, supervisory, and trouble conditions in the system and a historical log of events.

G. Primary Power: 24-V dc obtained from 120-V ac service and a power-supply module. Initiating devices, notification appliances, signaling lines, trouble signals.

1. Alarm current draw of entire fire-alarm system shall not exceed 80 percent of the power-supply module rating.

H. Secondary Power: 24-V dc supply system with batteries, automatic battery charger, and automatic transfer switch.

I. Instructions: Computer printout or typewritten instruction card mounted behind a plastic or glass cover in a stainless-steel or aluminum frame. Include interpretation and describe appropriate response for displays and signals. Briefly describe the functional operation of the system under normal, alarm, and trouble conditions.

2.4 MANUAL FIRE-ALARM BOXES

A. General Requirements for Manual Fire-Alarm Boxes: Comply with UL 38. Boxes shall be finished in red with molded, raised-letter operating instructions in contrasting color; shall show visible indication of operation; and shall be mounted on recessed outlet box. If indicated as surface mounted, provide manufacturer's surface back box.

1. Indoor Protective Shield: Factory-fabricated clear plastic enclosure hinged at the top to permit lifting for access to initiate an alarm. Lifting the cover actuates an integral battery-powered audible horn intended to discourage false-alarm operation.
2. Weatherproof Protective Shield: Factory-fabricated clear plastic enclosure hinged at the top to permit lifting for access to initiate an alarm.

2.5 SYSTEM SMOKE DETECTORS

A. General Requirements for System Smoke Detectors:

1. Comply with UL 268; operating at 24-V dc, nominal.
2. Integral Addressable Module: Arranged to communicate detector status (normal, alarm, or trouble) to fire-alarm control unit.
3. Base Mounting: Detector and associated electronic components shall be mounted in a twist-lock module that connects to a fixed base. Provide terminals in the fixed base for connection to building wiring.
4. Self-Restoring: Detectors do not require resetting or readjustment after actuation to restore them to normal operation.

5. Remote Control: Unless otherwise indicated, detectors shall be analog-addressable type, individually monitored at fire-alarm control unit for calibration, sensitivity, and alarm condition and individually adjustable for sensitivity by fire-alarm control unit.

    a. Rate-of-rise temperature characteristic shall be selectable at fire-alarm control unit for 15 or 20 deg F (8 or 11 deg C) per minute.
    b. Fixed-temperature sensing shall be independent of rate-of-rise sensing and shall be settable at fire-alarm control unit to operate at 135 or 155 deg F (57 or 68 deg C).
    c. Provide multiple levels of detection sensitivity for each sensor.

B. Photoelectric Smoke Detectors:

1. Detector address shall be accessible from fire-alarm control unit and shall be able to identify the detector's location within the system and its sensitivity setting.
2. An operator at fire-alarm control unit, having the designated access level, shall be able to manually access the following for each detector:

    a. Primary status.
    b. Device type.
    c. Present average value.
    d. Present sensitivity selected.
    e. Sensor range (normal, dirty, etc.).

C. Ionization Smoke Detector:

1. Detector address shall be accessible from fire-alarm control unit and shall be able to identify the detector's location within the system and its sensitivity setting.
2. An operator at fire-alarm control unit, having the designated access level, shall be able to manually access the following for each detector:

    a. Primary status.
    b. Device type.
    c. Present average value.
    d. Present sensitivity selected.
    e. Sensor range (normal, dirty, etc.).

D. Duct Smoke Detectors: Photoelectric type complying with UL 268A.

1. Detector address shall be accessible from fire-alarm control unit and shall be able to identify the detector's location within the system and its sensitivity setting.
2. An operator at fire-alarm control unit, having the designated access level, shall be able to manually access the following for each detector:

a. Primary status.
b. Device type.
c. Present average value.
d. Present sensitivity selected.
e. Sensor range (normal, dirty, etc.).

3. Weatherproof Duct Housing Enclosure: NEMA 250, Type 4X; NRTL listed for use with the supplied detector.
4. Each sensor shall have multiple levels of detection sensitivity.
5. Sampling Tubes: Design and dimensions as recommended by manufacturer for specific duct size, air velocity, and installation conditions where applied.
6. Relay Fan Shutdown: Rated to interrupt fan motor-control circuit.

E. Single-Station Duct Smoke Detectors:

1. Comply with UL 268A; operating at 120-V ac.
2. Sensor: LED or infrared light source with matching silicon-cell receiver.

a. Detector Sensitivity: Smoke obscuration between 2.5 and 3.5 percent/foot (0.008 and 0.011 percent/mm) when tested according to UL 268A.

3. Base Mounting: Detector and associated electronic components shall be mounted in a twist-lock module that connects to a fixed base. The fixed base shall be designed for mounting directly to air duct. Provide terminals in the fixed base for connection to building wiring.

a. Weatherproof Duct Housing Enclosure: NEMA 250, Type 4X; NRTL listed for use with the supplied detector.

4. Sampling Tubes: Design and dimensions as recommended by manufacturer for specific duct size, air velocity, and installation conditions where applied.
5. Relay Fan Shutdown: Rated to interrupt fan motor-control circuit.

2.6 HEAT DETECTORS

A. General Requirements for Heat Detectors: Comply with UL 521.

B. Heat Detector, Combination Type: Actuated by either a fixed temperature of 135 deg F (57 deg C) or a rate of rise that exceeds 15 deg F (8 deg C) per minute unless otherwise indicated.

1. Integral Addressable Module: Arranged to communicate detector status (normal, alarm, or trouble) to fire-alarm control unit.

C. Heat Detector, Fixed-Temperature Type: Actuated by temperature that exceeds a fixed temperature of [190 deg F (88 deg C).

1. Integral Addressable Module: Arranged to communicate detector status (normal, alarm, or trouble) to fire-alarm control unit. Detection system in paragraph below may be proprietary.

2.7 NOTIFICATION APPLIANCES

A. General Requirements for Notification Appliances: Individually addressed, connected to a signaling line circuit, equipped for mounting as indicated and with screw terminals for system connections.

B. General Requirements for Notification Appliances: Connected to notification appliance signal circuits, zoned as indicated, equipped for mounting as indicated and with screw terminals for system connections.

1. Combination Devices: Factory-integrated audible and visible devices in a single-mounting assembly, equipped for mounting as indicated and with screw terminals for system connections.

C. Visible Notification Appliances: Xenon strobe lights comply with UL 1971, with clear or nominal white polycarbonate lens mounted on an aluminum faceplate. The word "FIRE" is engraved in minimum 1-inch- (25-mm-) high letters on the lens.

1. Rated Light Output:

a. 15/30/75/110 cd, selectable in the field.

2. Mounting: Wall mounted unless otherwise indicated.
3. For units with guards to prevent physical damage, light output ratings shall be determined with guards in place.
4. Flashing shall be in a temporal pattern, synchronized with other units.
5. Strobe Leads: Factory connected to screw terminals.

2.8 MAGNETIC DOOR HOLDERS

A. Description: Units are equipped for wall or floor mounting as indicated and are complete with matching doorplate.

1. Electromagnet: Requires no more than 3 W to develop 25-lbf (111-N) holding force.

2. Wall-Mounted Units: Flush mounted unless otherwise indicated.
3. Rating: 24-V ac or dc.
4. Rating: 120-V ac.

B. Material and Finish: Match door hardware.

2.9 REMOTE ANNUNCIATOR

A. Description: Annunciator functions shall match those of fire-alarm control unit for alarm, supervisory, and trouble indications. Manual switching functions shall match those of fire-alarm control unit, including acknowledging, silencing, resetting, and testing.

1. Mounting: Flush cabinet, NEMA 250, Type 1.

B. Display Type and Functional Performance: Alphanumeric display and LED indicating lights shall match those of fire-alarm control unit. Provide controls to acknowledge, silence, reset, and test functions for alarm, supervisory, and trouble signals.

C. Secondary Power: Integral rechargeable battery and automatic charger.

D. Self-Test: Conducted automatically every 24 hours with report transmitted to central station.

PART 3 - EXECUTION

3.1 EQUIPMENT INSTALLATION

A. Comply with NFPA 72 for installation of fire-alarm equipment.

B. Install wall-mounted equipment, with tops of cabinets not more than 72 inches (1830 mm) above the finished floor.

C. Smoke- or Heat-Detector Spacing:

1. Comply with NFPA 72, "Smoke-Sensing Fire Detectors" Section in the "Initiating Devices" Chapter, for smoke-detector spacing.

2. Comply with NFPA 72, "Heat-Sensing Fire Detectors" Section in the "Initiating Devices" Chapter, for heat-detector spacing.
3. Smooth ceiling spacing shall not exceed 30 feet (9 m)
4. Spacing of detectors for irregular areas, for irregular ceiling construction, and for high ceiling areas shall be determined according to Appendix A or Appendix B in NFPA 72.
5. HVAC: Locate detectors not closer than 3 feet (1 m) 5 feet (1.5 m) from air-supply diffuser or return-air opening.
6. Lighting Fixtures: Locate detectors not closer than 12 inches (300 mm) from any part of a lighting fixture.

D. Duct Smoke Detectors: Comply with NFPA 72 and NFPA 90A. Install sampling tubes so they extend the full width of duct.

E. Heat Detectors in Elevator Shafts: Coordinate temperature rating and location with sprinkler rating and location.

F. Single-Station Smoke Detectors: Where more than one smoke alarm is installed within a dwelling or suite, they shall be connected so that the operation of any smoke alarm causes the alarm in all smoke alarms to sound.

G. Remote Status and Alarm Indicators: Install near each smoke detector and each sprinkler water-flow switch and valve-tamper switch that is not readily visible from normal viewing position.

H. Audible Alarm-Indicating Devices: Install not less than 6 inches (150 mm) below the ceiling. Install bells and horns on flush-mounted back boxes with the device-operating mechanism concealed behind a grille.

I. Visible Alarm-Indicating Devices: Install adjacent to each alarm bell or alarm horn and at least 6 inches (150 mm) below the ceiling.

J. Device Location-Indicating Lights: Locate in public space near the device they monitor.

K. Fire-Alarm Control Unit: Surface mounted, with tops of cabinets not more than 72 inches (1830 mm) above the finished floor.

L. Annunciator: Install with top of panel not more than 72 inches (1830 mm) above the finished floor.

3.2 CONNECTIONS

A. For fire-protection systems related to doors in fire-rated walls and partitions and to doors in smoke partitions, comply with requirements in Division 08 Section "Door Hardware." Connect hardware and devices to fire-alarm system.

   1. Verify that hardware and devices are NRTL listed for use with fire-alarm system in this Section before making connections.

B. Make addressable connections with a supervised interface device to the following devices and systems. Install the interface device less than 3 feet (1 m) from the device controlled. Make an addressable confirmation connection when such feedback is available at the device or system being controlled.
   1. Alarm-initiating connection to elevator recall system and components.
   2. Supervisory connections at valve supervisory switches.
   3. Supervisory connections at elevator shunt trip breaker.

3.3 IDENTIFICATION

A. Identify system components, wiring, cabling, and terminals. Comply with requirements for identification specified in Division 26 Section "Identification for Electrical Systems."

B. Install framed instructions in a location visible from fire-alarm control unit.

3.4 GROUNDING

A. Ground fire-alarm control unit and associated circuits; comply with IEEE 1100. Install a ground wire from main service ground to fire-alarm control unit.

3.5 FIELD QUALITY CONTROL

A. Manufacturer's Field Service: Engage a factory-authorized service representative to inspect, test, and adjust components, assemblies, and equipment installations, including connections.

B. Perform tests and inspections.

   1. Manufacturer's Field Service: Engage a factory-authorized service representative to inspect components, assemblies, and equipment installations, including connections, and to assist in testing.

C. Tests and Inspections:

1. Visual Inspection: Conduct visual inspection prior to testing.

   a. Inspection shall be based on completed Record Drawings and system documentation that is required by NFPA 72 in its "Completion Documents, Preparation" Table in the "Documentation" Section of the "Fundamentals of Fire Alarm Systems" Chapter.
   b. Comply with "Visual Inspection Frequencies" Table in the "Inspection" Section of the "Inspection, Testing and Maintenance" Chapter in NFPA 72; retain the "Initial/Reacceptance" column and list only the installed components.

2. System Testing: Comply with "Test Methods" Table in the "Testing" Section of the "Inspection, Testing and Maintenance" Chapter in NFPA 72.
3. Test audible appliances for the public operating mode according to manufacturer's written instructions. Perform the test using a portable sound-level meter complying with Type 2 requirements in ANSI S1.4.
4. Test audible appliances for the private operating mode according to manufacturer's written instructions.
5. Test visible appliances for the public operating mode according to manufacturer's written instructions.
6. Factory-authorized service representative shall prepare the "Fire Alarm System Record of Completion" in the "Documentation" Section of the "Fundamentals of Fire Alarm Systems" Chapter in NFPA 72 and the "Inspection and Testing Form" in the "Records" Section of the "Inspection, Testing and Maintenance" Chapter in NFPA 72.

D. Reacceptance Testing: Perform reacceptance testing to verify the proper operation of added or replaced devices and appliances.

E. Fire-alarm system will be considered defective if it does not pass tests and inspections.

F. Prepare test and inspection reports.

G. Maintenance Test and Inspection: Perform tests and inspections listed for weekly, monthly, quarterly, and semiannual periods. Use forms developed for initial tests and inspections.

H. Annual Test and Inspection: One year after date of Substantial Completion, test fire-alarm system complying with visual and testing inspection requirements in NFPA 72. Use forms developed for initial tests and inspections.

3.6 DEMONSTRATION

A. Engage a factory-authorized service representative to train Owner's maintenance personnel to adjust, operate, and maintain fire-alarm system.

END OF SECTION 283111

SECTION 313116 - TERMITE CONTROL

PART 1 - GENERAL

1.1 SUMMARY

A. Section Includes:
   1. Soil treatment with termiticide.

1.2 ACTION SUBMITTALS

A. Product Data: For each type of product indicated. Include the EPA-Registered Label for termiticide products.

1.3 INFORMATIONAL SUBMITTALS

A. Product certificates.

B. Soil Treatment Application Report: Include the following:
   1. Date and time of application.
   2. Moisture content of soil before application.
   3. Termiticide brand name and manufacturer.
   4. Quantity of undiluted termiticide used.
   5. Dilutions, methods, volumes used, and rates of application.
   6. Areas of application.
   7. Water source for application.

C. Warranties: Sample of special warranties.

1.4 QUALITY ASSURANCE

A. Installer Qualifications: A specialist who is licensed according to regulations of authorities having jurisdiction to apply termite control treatment and products in jurisdiction where Project is located and who employs workers trained and approved by manufacturer to install manufacturer's products.

B. Regulatory Requirements: Formulate and apply termiticides and termiticide devices according to the EPA-Registered Label.

1.5 PROJECT CONDITIONS

A. Environmental Limitations: To ensure penetration, do not treat soil that is water saturated or frozen. Do not treat soil while precipitation is occurring. Comply with requirements of the EPA-Registered Label and requirements of authorities having jurisdiction.

B. Coordinate soil treatment application with excavating, filling, grading, and concreting operations. Treat soil under footings and ground-supported slabs before construction.

1.6 WARRANTY

A. Soil Treatment Special Warranty: Manufacturer's standard form, signed by Applicator and Contractor, certifying that termite control work, consisting of applied soil termiticide treatment, will prevent infestation of subterranean termites. If subterranean termite activity or damage is discovered during warranty period, re-treat soil and repair or replace damage caused by termite infestation.
   1. Warranty Period: Five> years from date of Substantial Completion.

1.7 MAINTENANCE SERVICE

A. Continuing Service: Beginning at Substantial Completion, provide 12 months' continuing service including monitoring, inspection, and re-treatment for occurrences of termite activity. Provide a standard continuing service agreement. State services, obligations, conditions, terms for agreement period, and terms for future renewal options.

PART 2 - PRODUCTS

2.1 SOIL TREATMENT

A. Termiticide: Provide an EPA-Registered termiticide, complying with requirements of authorities having jurisdiction, in an aqueous solution formulated to prevent termite infestation. Provide quantity required for application at the label volume and rate for the maximum termiticide concentration allowed for each specific use, according to product's EPA-Registered Label.
   1. Product: One of the following:
      a. Amvac; Prelude.
      b. BASF Corporation, Agricultural Products; Termidor.
      c. Control Solutions Inc.; Dominion.
      d. Bayer Environmental Science; Premise 75.
      e. FMC Corporation, Agricultural Products Group; Dragnet FT or Baseline.
      f. Syngenta; Demon Max.
   2. Service Life of Treatment: Soil treatment termiticide that is effective for not less than five years against infestation of subterranean termites.

PART 3 - EXECUTION

3.1 EXAMINATION

A. Examine substrates, areas, and conditions, with Applicator present, for compliance with requirements for moisture content of soil per termiticide label requirements, interfaces with earthwork, slab and foundation work, landscaping, utility installation, and other conditions affecting performance of termite control.

B. Proceed with application only after unsatisfactory conditions have been corrected.

3.2 PREPARATION

A. General: Comply with the most stringent requirements of authorities having jurisdiction and with manufacturer's written instructions for preparation before beginning application of termite control treatment. Remove all extraneous sources of wood cellulose and other edible materials such as wood debris, tree stumps and roots, stakes, formwork, and construction waste wood from soil within and around foundations.

B. Soil Treatment Preparation: Remove foreign matter and impermeable soil materials that could decrease treatment effectiveness on areas to be treated. Loosen, rake, and level soil to be treated except previously compacted areas under slabs and footings. Termiticides may be applied before placing compacted fill under slabs if recommended in writing by termiticide manufacturer.

1. Fit filling hose connected to water source at the site with a backflow preventer, complying with requirements of authorities having jurisdiction.

3.3 APPLICATION, GENERAL

A. General: Comply with the most stringent requirements of authorities having jurisdiction and with manufacturer's EPA-Registered Label for products.

3.4 APPLYING SOIL TREATMENT

A. Application: Mix soil treatment termiticide solution to a uniform consistency. Provide quantity required for application at the label volume and rate for the maximum specified concentration of termiticide, according to manufacturer's EPA-Registered Label, to the following so that a continuous horizontal and vertical termiticidal barrier or treated zone is established around and under building construction. Distribute treatment evenly.

1. Slabs-on-Grade and Basement Slabs: Under ground-supported slab construction, including footings and building slabs, as an overall treatment. Treat soil materials before concrete footings and slabs are placed.

2. Foundations: Adjacent soil, including soil along the entire inside perimeter of foundation walls; along both sides of interior partition walls; around plumbing pipes and electric conduit penetrating the slab; and along the entire outside perimeter, from grade to bottom of footing. Avoid soil washout around footings.
3. Masonry: Treat voids.
4. Penetrations: At areas where slabs will be penetrated.

B. Avoid disturbance of treated soil after application. Keep off treated areas until completely dry.

C. Protect termiticide solution, dispersed in treated soils and fills, from being diluted until ground-supported slabs are installed. Use waterproof barrier according to EPA-Registered Label instructions.

D. Reapply soil treatment solution to areas disturbed by subsequent excavation, grading, landscaping, or other construction activities following application.

END OF SECTION 313116

SECTION 312313 - RADON MITIGATION

PART 1 - GENERAL

1.1 SUMMARY

A. Section Includes:
   1. Passive soil gas mitigation system. Provide one for each apartment building and Clubhouse building.

B. System Design: Soil gas mitigation system design incorporates a series of horizontal soil gas collector mats, with a gas permeable layer of coarse sand or gravel of at least four inch thickness, connected to a vertical riser extending through the roof. Each 3,800 square feet of coverage includes a four inch PVC pipe vertical riser complying with ANSI/AARST CC-1000, allowing passive sub slab depressurization systems (SSDS) to possibly vent the radon to an acceptable level.
   1. If further mitigation is required, radon fans can be installed and an active SSDS will be commissioned.
   2. Work also includes placement of electrical junction boxes for fan hook ups and sealing of possible radon entries through the plastic sheeting (see Design Criteria below) and slab.
   3. In accordance with passive soil gas mitigation system design, after slabs have been cast an evaluation of pressure field extension (PFE) to be conducted to verify no changes are needed for the design of exhaust vent pipe assemblies to be installed.

C. Design Criteria, Passive Soil Gas Mitigation System:
   1. Soil gas collector mats.
   2. T “riser” adapter to transition from the soil gas collector mats to vertical risers.
   3. Four inches of gas permeable layer of coarse sand or gravel, conforming the ASTM C33.
   4. Minimum 6.0 mils thick polyethylene sheeting turned up a minimum of six inches onto foundation walls and continuously sealed to the wall for the full perimeter; seams overlapped not less than 12 inches. Sheeting laid on the soil gas collector mats before casting concrete slabs.
   5. Electric boxed outlet within six feet of the vent system piping in the building attic space.
   6. Four inch Schedule 40 PVC pipe vent system extending vertically through the building roof a minimum of 12 inches above the roof surface.
   7. Labels or markings placed according to ANSI/AARST CC-1000, section 8.10.
   8. Exhaust vent piping with a slope of not less than 1/8 inch per foot. Sloped sections of horizontal pipe in excess of 16 feet to be avoided to fullest extent practicable.

1.2 REFERENCES

A. AMCA 210: Laboratory Methods of Testing Fans for Aerodynamic Performance Rating.

B. ANSI/AARST CC-1000: Soil Gas Control Systems in New Construction.

C. ANSI/AARST MALB: Protocol for Conducting Measurements of Radon and Radon Decay Products in Schools and Large Buildings.

D. ANSI/AARST-LB: Radon Mitigation Standards for Schools and Large Buildings.

E. ASTM C33: Standard Specification for Concrete Aggregates.

F. ASTM C920: Standard Specification for Elastomeric Joint Sealants.

G. ASTM D2665: Standard Specification for Poly(Vinyl Chloride) (PVC) Plastic Drain, Waste, and Vent Pipe Fittings.

H. EPA 402-R-93-078: Radon Mitigation Standards.

I. HUD: Multifamily Accelerated Processing (MAP) Guide.

J. NEMA MG 1: Motors and Generators.

K. NFPA 70: National Electrical Code.

L. 29 CFR 10190.1096: Ionizing Radiation.

1.3 ACTION SUBMITTALS

A. Product Data: For radon mitigation system components.

1.4 INFORMATIONAL SUBMITTALS

A. Field Inspection Reports: For post-mitigation testing and inspection.

B. Certifications:
   1. Mitigation specialist.
   2. Testing laboratory certification.

1.5 QUALITY ASSURANCE

A. Mitigation Specialist Qualifications: A specialist who is licensed according to regulations of authorities having jurisdiction to provide radon mitigation in jurisdiction where Project is located and who can demonstrate appropriate documented experience, over a three year period, with previously completed projects similar to the scope and complexity of this Project. Specialist to provide evidence of certification from one of the following:

1. National Radon Proficiency Program (NRPP).
2. National Radon Safety Board (NRSB).

B. Conformance Requirements:
1. ANSI/AARST CC-1000: Soil Gas Control Systems in New Construction of Buildings.
2. OSHA, EPA, HUD, state, and local standards and regulations relating to worker safety and occupational radon exposure. Includes the following:
   a. 29 CFR 1910.1096.
   b. EPA 402-R-93-078.
   c. HUD MAP Guide Article 9.6.3 “Radon,” including Section 9.6.3.5 “Requirements for New Construction.”
   d. Current State of Florida certification.

PART 2 - PRODUCTS

2.1 RADON MITIGATION SYSTEM COMPONENTS

A. Solar Gas Collector Mat: One inch high by 12 inch wide matrix enveloped in a geotextile filter fabric core; 90 percent of geomatrix is air space. Core material fabricated from a waffle-like, double-sided, lightweight polystyrene plastic, capable of withstanding 4,300 psf. 45 foot mat lengths
1. Basis of Design: “Vapor Mat”; Radon PDS.

B. Polyvinyl Chloride (PVC) Piping and Fittings: ASTM D2665, Schedule 40.

C. In-Line Tubular Centrifugal Fans: AMCA 210 and UL listed.

D. Electrical Work: NFPA 70, NEMA MG 1, ANSI/AARST RMS-LB, and EPA 402-R-93-078. No. 12 AWG minimum wire size, solid copper installed in EMT or surface metal raceway and as acceptable to authorities having jurisdiction.

E. Sealants: ASTM C920, polyurethane, Type S, Grade NS, Class 25, Use T.

F. Related Materials: T-Risers, staples, seam tape, and other components necessary for a complete system.

PART 3 - EXECUTION

3.1 EXAMINATION

A. Examine substrates, areas, and conditions, with mitigation specialist present, for compliance with requirements, including acceptability of subgrade to receive the Work.

B. Proceed with application only after unsatisfactory conditions have been corrected.

3.2 SOIL GAS COLLECTOR MAT SYSTEM INSTALLATION

A. Lay out the soil gas collection mat on installation subgrades after final preparation and prior to concrete slab pour. Lay out mat in rectangular loop in the largest area with branches or legs into smaller areas.

B. Position T-Risers in appropriate locations and secure with a 12 inch long spike through center hole.

C. Slide mat into openings in T-Riser with a portion of the fabric around the outside. Tape fabric to outside of T-Riser with duct tape and staple to the ground near the T-Riser with a landscaping staple.

D. Roll out the mat smoothly on subgrade, avoiding wrinkles and buckling, and working away from the T-Riser; staple to subgrade every three to four feet, in addition to corners, T's, and ends.

E. Corners: Peel back filter fabric, cutting the two ends of mat matrix at 45 degree angles and butt (or overlap not more than 1/2 inch) the matrix together. Pull filter fabric back and tape into place. Staple across matrix joints and each leg of the corner. Provide a minimum of four staples at each T, two across the joint and one on each side of the loop and branch.

F. T Construction for Branches or Legs: Slat main loop fabric at desired location. Cut fabric of branch at edges and exposed 2 inches of matrix. Cut off exposed matrix and but matrix of branch (or overlap not more than 1/2 inch) to matrix of main loop. Pull filter fabric of branch back over the main loop and tape into place. Staple across matrix joint with two staples and one each on the branch and the main loop. Use a minimum of four staples at each T, two across the joint and one each on the loop and branch.

G. When the building is ready for the soil gas vent pipe to be installed, cut off the top of the T-Riser and insert a four inch pipe, caulked with polyurethane, and secured with screws. Label vent pipe to avoid confusion with plumbing pipes.

H. After concrete slabs have been cast, conduct a pressure field extension (PFE) evaluation to verify changes are not needed for the design of exhaust vent pipe assemblies to be installed.

3.3 FIELD QUALITY CONTROL

A. Radon Mitigation System Inspection: Mitigation specialist to inspect the installed radon mitigation system for acceptability. Identify any deficiencies in the field inspection report to be submitted.

B. Post Mitigation Testing and Monitoring: Perform post mitigation radon testing according to ANSI/AARST RMS-LB, EPA 402-R-93-078, and as specified herein.
   1. Test each radon mitigation system for effectiveness no sooner than 234 hours nor later than 15 days after activation of the radon mitigation systems. Provide approved radon detectors per 2,000 square feet but not less than one detector per enclosed space.
   2. At the completion of the testing period, collect the detectors and deliver to an approved testing laboratory for analysis. Provide certified radon test results of the effectiveness of the mitigation system not later than 30 days after collecting the detectors.

C. Reapply soil treatment solution to areas disturbed by subsequent excavation, grading, landscaping, or other construction activities following application.

END OF SECTION 31213

RESIDENTIAL ENERGY CONSERVATION CODE DOCUMENTATION CHECKLIST

Florida Department of Business and Professional Regulation
Simulated Performance Alternative (Performance) Method

Applications for compliance with the 2020 Florida Building Code, Energy Conservation via the Residential Simulated Performance Alternative shall include:

- ☑ *This checklist*
- ☑ *Form R405-2020 report*
- ☑ *Input summary checklist that can be used for field verification (usually four pages/may be greater)*
- ☑ *Energy Performance Level (EPL) Display Card (one page)*
- ☑ *HVAC system sizing and selection based on ACCA Manual S or per exceptions provided in Section R403.7*
- ☑ *Mandatory Requirements (five pages)*

Required prior to CO:

- ☑ *Air Barrier and Insulation Inspection Component Criteria checklist (Table R402.4.1.1 - one page)*
- ☑ *A completed 2020 Envelope Leakage Test Report (usually one page); exception in R402.4 allows dwelling units of R-2 Occupancies and multiple attached single family dwellings to comply with Section C402.5*
- ☑ *If Form R405 duct leakage type indicates anything other than "default leakage", then a completed 2020 Duct Leakage Test Report - Performance Method (usually one page)*

.

☑ HVAC Load Calculations (Manual J's)

THIS ITEM HAS BEEN ELECTRONICALLY SIGNED AND SEALED BY MICHAEL A. COSTELLO, PE USING A DIGITAL SIGNATURE AND DATE. PRINTED COPIES OF THIS DOCUMENT ARE NOT CONSIDERED SIGNED AND SEALED AND THE SIGNATURE MUST BE VERIFIED ON ANY ELECTRONIC COPIES.

BID SET 08/05/2022

FORM R405-2020

FLORIDA ENERGY EFFICIENCY CODE FOR BUILDING CONSTRUCTION

Florida Department of Business and Professional Regulation - Residential Performance Method

Project Name:	200701 Magnolia 1BD-otf	Builder Name:	
Street:	7240 & 7338 Massachusetts ave	Permit Office:	
City, State, Zip:	Newport RIchey, FL, 34653	Permit Number:	
Owner:		Jurisdiction:	
Design Location:	FL, CLEAR_ST_PETERSBURG	County:	Pasco(Florida Climate Zone 2)

1. New construction or existing — New (From Plans)
2. Single family or multiple family — Attached
3. Number of units, if multiple family — 1
4. Number of Bedrooms — 1
5. Is this a worst case? — Yes
6. Conditioned floor area above grade (ft²) — 671
   Conditioned floor area below grade (ft²) — 0
7. Windows(119.5 sqft.)

	Description	Area
a. U-Factor:	Sgl, U=0.50	119.50 ft²
SHGC:	SHGC=0.50	
b. U-Factor:	N/A	ft²
SHGC:		
c. U-Factor:	N/A	ft²
SHGC:		

Area Weighted Average Overhang Depth: 0.000 ft
Area Weighted Average SHGC: 0.500

8. Skylights

	Description	Area
U-Factor:(AVG)	N/A	N/A ft²
SHGC(AVG):	N/A	

9. Floor Types

	Insulation	Area
a. N/A	R=	ft²
b. N/A	R=	ft²
c. N/A	R=	ft²

10. Wall Types(912.0 sqft.)

	Insulation	Area
a. Concrete Block - Ext Insul, Exterior	R=5.0	912.00 ft²
b. N/A	R=	ft²
c. N/A	R=	ft²
d. N/A	R=	ft²

11. Ceiling Types(671.0 sqft.)

	Insulation	Area
a. Roof Deck (Unvented)	R=30.0	671.00 ft²
b. N/A	R=	ft²
c. N/A	R=	ft²

12. Ducts, location & insulation level

	R	ft²
a. Sup: 1st Floor, Ret: 1st Floor, AH: 1st Floor	6	134.2
b.		
c.		

13. Cooling Systems

	kBtu/hr	Efficiency
a. Central Unit	23.4	SEER:16.00

14. Heating Systems

	kBtu/hr	Efficiency
a. Electric Strip Heat	13.6	COP:1.00

15. Hot Water Systems
    a. Electric — Cap: 46 gallons, EF: 0.920
    b. Conservation features — None
16. Credits — Pstat

Glass/Floor Area: 0.178

Total Proposed Modified Loads: 32.37
Total Baseline Loads: 32.47

PASS

I hereby certify that the plans and specifications covered by this calculation are in compliance with the Florida Energy Code.

PREPARED BY: Michael A. Costello, PE

DATE: 07/06/2022

I hereby certify that this building, as designed, is in compliance with the Florida Energy Code.

OWNER/AGENT: _____

DATE: _____

Review of the plans and specifications covered by this calculation indicates compliance with the Florida Energy Code. Before construction is completed this building will be inspected for compliance with Section 553.908 Florida Statutes.

GREAT SEAL OF THE STATE OF FLORIDA — IN GOD WE TRUST

BUILDING OFFICIAL: _____

DATE: _____

- Compliance requires certification by the air handler unit manufacturer that the air handler enclosure qualifies as certified factory-sealed in accordance with R403.3.2.1.
- Compliance with a proposed duct leakage Qn requires a PERFORMANCE Duct Leakage Test Report confirming duct leakage to outdoors, tested in accordance with ANSI/RESNET/ICC 380, is not greater than 0.030 Qn for whole house.
- Compliance requires an Air Barrier and Insulation Inspection Checklist in accordance with R402.4.1.1 and this project requires a PERFORMANCE envelope leakage test report with envelope leakage no greater than 7.00 ACH50 (R402.4.1.2).

BID SET 08/05/2022

FORM R405-2020

INPUT SUMMARY CHECKLIST REPORT

PROJECT

Title:	200701 Magnolia 1BD-otf			Address type:	Street Address
Building Type:	User	Bedrooms:	1	Lot #:	---
Owner:		Conditioned Area:	671	Block/SubDivision:	---
		Total Stories:	1	PlatBook:	---
Builder Name:		Worst Case:	Yes	Street:	7240 & 7338 Massachusetts ave
Permit Office:		Rotate Angle:	270	County:	Pasco
Jurisdiction:		Cross Ventilation:		City, State, Zip:	Newport RIchey,
Family Type:	Attached	Whole House Fan:			FL, 34653
New/Existing:	New (From Plans)	Terrain:	Suburban		
Year Construct:	2022	Shielding:	Suburban		
Comment:					

CLIMATE

✓	Design Location	Tmy Site	Design Temp 97.5%	Design Temp 2.5%	Int Design Temp Winter	Int Design Temp Summer	Heating Degree Days	Design Moisture	Daily temp Range
___	FL, CLEAR_ST_PETERSBUR	FL_ST_PETERSBURG_CLEAR	39	91	70	75	733	54	Medium

BLOCKS

✓	Number	Name	Area	Volume
___	1	Block1	671	6710

SPACES

✓	Number	Name	Area	Volume	Kitchen	Occupants	Bedrooms	Finished	Cooled	Heated
___	1	1st Floor	671	6710	Yes	2	1	Yes	Yes	Yes

FLOORS (Total Exposed Area = 0 sq.ft.)

✓	#	Floor Type	Space	Exposed Perim	Perimeter R-Value	Area	U-Factor	Joist R-Value	Tile	Wood	Carpet

ROOF

✓	#	Type	Materials	Roof Area	Gable Area	Roof Color	Rad Barr	Solar Absor.	SA Tested	Emitt	Emitt Tested	Deck Insul.	Pitch (deg)
___	1	Gable or shed	Composition shingles	727 ft²	140 ft²	Light	N	0.3	No	0.95	No	30	22.62

ATTIC

✓	#	Type	Ventilation	Vent Ratio (1 in)	Area	RBS	IRCC
___	1	No attic	Unvented	0	671 ft²	N	N

CEILING (Total Exposed Area = 671 sq.ft.)

✓	#	Ceiling Type	Space	R-Value	Ins. Type	Area	U-Factor	Framing Frac.	Truss Type
___	1	Under Attic(Unvented)	1st Floor	30.0	Blown	671.0ft²	0.020	0.11	Wood

BID SET 08/05/2022

FORM R405-2020

INPUT SUMMARY CHECKLIST REPORT

WALLS (Total Exposed Area = 912 sq.ft.)

Note: First wall orientation below is as entered. Actual orientation is modified by the rotate angle (270 degrees) as shown in the "Project" section on page 1.

√	#	Ornt	Adjacent To	Wall Type	Space	Cavity R-Value	Width Ft	Width In	Height Ft	Height In	Area sq.ft.	U-Factor	Sheath R-Value	Frm. Frac.	Solar Absor.	Below Grade
___	1	N=>W	Exterior	Conc. Blk - Ext Ins	1st Floor	5.0	22.6	0	10.0	0	226.0	0.117	0	0	0.60	0 %
___	2	S=>E	Exterior	Conc. Blk - Ext Ins	1st Floor	5.0	22.6	0	10.0	0	226.0	0.117	0	0	0.60	0 %
___	3	W=>S	Exterior	Conc. Blk - Ext Ins	1st Floor	5.0	35.0	0	10.0	0	350.0	0.117	0	0	0.60	0 %
___	4	E=>N	Exterior	Conc. Blk - Ext Ins	1st Floor	5.0	11.0	0	10.0	0	110.0	0.117	0	0	0.60	0 %

DOORS (Total Exposed Area = 0 sq.ft.)

√	#	Ornt	Adjacent To	Door Type	Space	Storms	U-Value	Width Ft	Width In	Height Ft	Height In	Area
___	1	N=>W(Front)		Wood	1st Floor	None	0.20	0.10	0	0.10	0	0.0ft²

WINDOWS (Total Exposed Area = 120 sq.ft.)

√	#	Ornt	Wall ID	Frame	Panes	NFRC	U-Factor	SHGC	Imp	Storm	Total Area (ft²)	Same Units	Width (ft)	Height (ft)	--Overhang-- Depth (ft)	Sep. (ft)	Interior Shade	Screen
___	1	N=>W	1	Metal	Low-E Single	Y	0.50	0.50	N	N	13.3	1	4.00	3.33	0.0	0.0	Drapes/blinds	None
___	2	N=>W	1	Metal	Low-E Single	Y	0.50	0.50	N	N	39.5	1	6.00	6.58	0.0	0.0	Drapes/blinds	None
___	3	S=>E	2	Metal	Low-E Single	Y	0.50	0.50	N	N	26.7	2	4.00	3.33	0.0	0.0	Drapes/blinds	None
___	4	W=>S	3	Metal	Low-E Single	Y	0.50	0.50	N	N	40.0	3	4.00	3.33	0.0	0.0	Drapes/blinds	None

INFILTRATION

√	#	Scope	Method	SLA	CFM50	ELA	EqLA	ACH	ACH50	Space(s)
___	1	Wholehouse	Proposed ACH(50)	0.00044	783	42.95	80.63	0.1697	7.0	All

MASS

√	#	Mass Type	Area	Thickness	Furniture Fraction	Space
___	1	Default(8 lbs/sq.ft.)	0 ft²	0 ft	0.30	1st Floor

HEATING SYSTEM

√	#	System Type	Subtype	AHRI #	Efficiency	Capacity kBtu/hr	----Geothermal HeatPump---- Entry	Power	Volt	Current	Ducts	Block
___	1	Electric Strip Heat	None		COP: 1.00	13.6		0.00	0.00	0.00	sys#1	1

COOLING SYSTEM

√	#	System Type	Subtype/Speed	AHRI #	Efficiency	Capacity kBtu/hr	Air Flow cfm	SHR	Duct	Block
___	1	Central Unit	Split/Single		SEER:16.0	23.4	703	0.82	sys#1	1

FORM R405-2020

INPUT SUMMARY CHECKLIST REPORT

HOT WATER SYSTEM

√	#	System Type	Subtype	Location	EF(UEF)	Cap	Use	SetPnt	Fixture Flow	Pipe Ins.	Pipe length
___	1	Electric	None	1st Floor	0.92 (0.92)	46.00 gal	40 gal	120 deg	Standard	=>R-3	99

		Recirculation System	Recirc Control Type	Loop length	Branch length	Pump power	DWHR	Facilities Connected	Equal Flow	DWHR Eff	Other Credits
___	1	No		NA	NA	NA	No	NA	NA	NA	None

DUCTS

√	Duct #	---------Supply--------- Location	R-Value	Area	---------Return--------- Location	R-Value	Area	Leakage Type	Air Handler	CFM 25 TOT	CFM 25 OUT	QN	RLF	HVAC # Heat	Cool
___	1	1st Floor	6.0	134 ft²	1st Floor	6.0	34 ft²	Prop. Leak Free	1st Floor	---	---	0.03	0.50	1	1

MECHANICAL VENTILATION

√	Type	Supply CFM	Exhaust CFM	HRV	Fan	Run Time	Heating System	Cooling System
___	Runtime Vent	30.0	0.0	0.0	0.0 W	0 %	1 - Electric Strip Heat	1 - Central Unit

TEMPERATURES

Programable Thermostat: Y Ceiling Fans: N

	Jan	Feb	Mar	Apr	May	Jun	Jul	Aug	Sep	Oct	Nov	Dec
Cooling	[ ]	[ ]	[ ]	[ ]	[ ]	[X]	[X]	[X]	[X]	[ ]	[ ]	[ ]
Heating	[X]	[X]	[X]	[ ]	[ ]	[ ]	[ ]	[ ]	[ ]	[ ]	[X]	[X]
Venting	[ ]	[ ]	[X]	[X]	[ ]	[ ]	[ ]	[ ]	[ ]	[X]	[X]	[ ]

√ Thermostat Schedule: HERS 2006 Reference

Schedule Type		Hours 1	2	3	4	5	6	7	8	9	10	11	12
___ Cooling (WD)	AM	78	78	78	78	78	78	78	78	80	80	80	80
	PM	80	80	78	78	78	78	78	78	78	78	78	78
___ Cooling (WEH)	AM	78	78	78	78	78	78	78	78	78	78	78	78
	PM	78	78	78	78	78	78	78	78	78	78	78	78
___ Heating (WD)	AM	66	66	66	66	66	68	68	68	68	68	68	68
	PM	68	68	68	68	68	68	68	68	68	68	66	66
___ Heating (WEH)	AM	66	66	66	66	66	68	68	68	68	68	68	68
	PM	68	68	68	68	68	68	68	68	68	68	66	66

FORM R405-2020

ENERGY PERFORMANCE LEVEL (EPL) DISPLAY CARD

ESTIMATED ENERGY PERFORMANCE INDEX* = 100

The lower the EnergyPerformance Index, the more efficient the home.

7240 & 7338 Massachusetts ave,Newport RIchey,FL,34653

1. New construction or existing		New (From Plans)
2. Single family or multiple family		Attached
3. Number of units, if multiple family		1
4. Number of Bedrooms		1
5. Is this a worst case?		Yes
6. Conditioned floor area above grade (ft²)		671
Conditioned floor area below grade (ft²)		0
7. Windows**	Description	Area
a. U-Factor:	Sgl, U=0.50	119.50 ft²
SHGC:	SHGC=0.50	
b. U-Factor:	N/A	ft²
SHGC:		
c. U-Factor:	N/A	ft²
SHGC:		
Area Weighted Average Overhang Depth:		0.000 ft
Area Weighted Average SHGC:		0.500
8. Skylights	Description	Area
U-Factor:(AVG)	N/A	N/A ft²
SHGC(AVG):	N/A	

9. Floor Types	Insulation	Area
a. N/A	R=	ft²
b. N/A	R=	ft²
c. N/A	R=	ft²

10. Wall Types(912.0 sqft.)	Insulation	Area
a. Concrete Block - Ext Insul, Exterior	R=5.0	912.00 ft²
b. N/A	R=	ft²
c. N/A	R=	ft²
d. N/A	R=	ft²

11. Ceiling Types(671.0 sqft.)	Insulation	Area
a. Roof Deck (Unvented)	R=30.0	671.00 ft²
b. N/A	R=	ft²
c. N/A	R=	ft²

12. Ducts, location & insulation level	R	ft²
a. Sup: 1st Floor, Ret: 1st Floor, AH: 1st Floor	6	134.2
b.		
c.		

13. Cooling Systems	kBtu/hr	Efficiency
a. Central Unit	23.4	SEER:16.00

14. Heating Systems	kBtu/hr	Efficiency
a. Electric Strip Heat	13.6	COP:1.00

15. Hot Water Systems	
a. Electric	Cap: 46 gallons EF: 0.920
b. Conservation features	None
16. Credits	Pstat

I certify that this home has complied with the Florida Energy Efficiency Code for Building Construction through the above energy saving features which will be installed (or exceeded) in this home before final inspection. Otherwise, a new EPL Display Card will be completed based on installed Code compliant features.

Builder Signature: _____ Date: _____

Address of New Home: 7240 & 7338 Massachusetts ave City/FL Zip: Newport RIchey,FL,34653

*Note: This is not a Building Energy Rating. If your Index is below 70, your home may qualify for energy efficient mortgage (EEM) incentives if you obtain a Florida Energy Rating. For information about the Florida Building Code, Energy Conservation, contact the Florida Building Commission's support staff.

**Label required by Section R303.1.3 of the Florida Building Code, Energy Conservation, if not DEFAULT.

BID SET 08/05/2022

Florida Building Code, Energy Conservation, 7th Edition (2020)
Mandatory Requirements for Residential Performance, Prescriptive and ERI Methods

ADDRESS:	7240 & 7338 Massachusetts ave Newport RIchey, FL 34653	Permit Number:	

MANDATORY REQUIREMENTS - See individual code sections for full details.

SECTION R401 GENERAL

☐ **R401.3 Energy Performance Level (EPL) display card - (Mandatory).** The building official shall require that an energy performance level (EPL) display card be completed and certified by the builder to be accurate and correct before final approval of the building for occupancy. Florida law (Section 553.9085, Florida Statutes) requires the EPL display card to be included as an addendum to each sales contract for both presold and nonpresold residential buildings. The EPL display card contains information indicating the energy performance level and efficiencies of components installed in a dwelling unit. The building official shall verify that the EPL display card completed and signed by the builder accurately reflects the plans and specifications submitted to demonstrate code compliance for the building. A copy of the EPL display card can be found in Appendix RD.

SECTION R402 BUILDING THERMAL ENVELOPE

☐ **R402.4 Air leakage (Mandatory).** The building thermal envelope shall be constructed to limit air leakage in accordance with the requirements of Sections R402.4.1 through R402.4.5.

> **Exception:** Dwelling units of R-2 Occupancies and multiple attached single family dwellings shall be permitted to comply with Section C402.5.

☐ **R402.4.1 Building thermal envelope.** The building thermal envelope shall comply with Sections R402.4.1.1 and R402.4.1.2. The sealing methods between dissimilar materials shall allow for differential expansion and contraction.

☐ **R402.4.1.1 Installation.** The components of the building thermal envelope as listed in Table R402.4.1.1 shall be installed in accordance with the manufacturer's instructions and the criteria listed in Table R402.4.1.1, as applicable to the method of construction. Where required by the code official, an approved third party shall inspect all components and verify compliance.

☐ **R402.4.1.2 Testing.** The building or dwelling unit shall be tested and verified as having an air leakage rate not exceeding seven air changes per hour in Climate Zones 1 and 2, and three air changes per hour in Climate Zones 3 through 8. Testing shall be conducted in accordance with ANSI/RESNET/ICC 380 and reported at a pressure of 0.2 inch w.g. (50 pascals). Testing shall be conducted by either individuals as defined in Section 553.993(5) or (7), Florida Statutes, or individuals licensed as set forth in Section 489.105(3)(f), (g) or (i) or an approved third party. A written report of the results of the test shall be signed by the party conducting the test and provided to the code official. Testing shall be performed at any time after creation of all penetrations of the building thermal envelope.

> **Exception:** Testing is not required for additions, alterations, renovations, or repairs, of the building thermal envelope of existing buildings in which the new construction is less than 85 percent of the building thermal envelope.

During testing:
1. Exterior windows and doors, fireplace and stove doors shall be closed, but not sealed, beyond the intended weatherstripping or other infiltration control measures.
2. Dampers including exhaust, intake, makeup air, backdraft and flue dampers shall be closed, but not sealed beyond intended infiltration control measures.
3. Interior doors, if installed at the time of the test, shall be open.
4. Exterior doors for continuous ventilation systems and heat recovery ventilators shall be closed and sealed.
5. Heating and cooling systems, if installed at the time of the test, shall be turned off.
6. Supply and return registers, if installed at the time of the test, shall be fully open.

☐ **R402.4.2 Fireplaces.** New wood-burning fireplaces shall have tight-fitting flue dampers or doors, and outdoor combustion air. Where using tight-fitting doors on factory-built fireplaces listed and labeled in accordance with UL 127, the doors shall be tested and listed for the fireplace. Where using tight-fitting doors on masonry fireplaces, the doors shall be listed and labeled in accordance with UL 907.

☐ **R402.4.3 Fenestration air leakage.** Windows, skylights and sliding glass doors shall have an air infiltration rate of no more than 0.3 cfm per square foot (1.5 L/s/m2), and swinging doors no more than 0.5 cfm per square foot (2.6 L/s/m2), when tested according to NFRC 400 or AAMA/ WDMA/CSA 101/I.S.2/A440 by an accredited, independent laboratory and listed and labeled by the manufacturer.

> **Exception:** Site-built windows, skylights and doors.

☐ **R402.4.4 Rooms containing fuel - burning appliances.** In Climate Zones 3 through 8, where open combustion air ducts provide combustion air to open combustion fuel burning appliances, the appliances and combustion air opening shall be located outside the building thermal envelope or enclosed in a room, isolated from inside the thermal envelope. Such rooms shall be sealed and insulated in accordance with the envelope requirements of Table R402.1.2, where the walls, floors and ceilings shall meet not less than the basement wall R-value requirement. The door into the room shall be fully gasketed and any water lines and ducts in the room insulated in accordance with Section R403. The combustion air duct shall be insulated where it passes through conditioned space to a minimum of R-8.

> **Exceptions:**
> 1. Direct vent appliances with both intake and exhaust pipes installed continuous to the outside.
> 2. Fireplaces and stoves complying with Section R402.4.2 and Section R1006 of the Florida Building Code, Residential.

MANDATORY REQUIREMENTS (Continued)

☐ **R402.4.5 Recessed lighting.** Recessed luminaires installed in the building thermal envelope shall be sealed to limit air leakage between conditioned and unconditioned spaces. All recessed luminaires shall be IC-rated and labeled as having an air leakage rate not more than 2.0 cfm (0.944 L/s) when tested in accordance with ASTM E283 at a 1.57 psf (75 Pa) pressure differential. All recessed luminaires shall be sealed with a gasket or caulk between the housing and the interior wall or ceiling covering.

SECTION R403 SYSTEMS

R403.1 Controls

☐ **R403.1.1 Thermostat provision (Mandatory).** At least one thermostat shall be provided for each separate heating and cooling system

☐ **R403.1.3 Heat pump supplementary heat (Mandatory).** Heat pumps having supplementary electric-resistance heat shall have controls that, except during defrost, prevent supplemental heat operation when the heat pump compressor can meet the heating load.

☐ **R403.3.2 Sealing (Mandatory).** All ducts, air handlers, filter boxes and building cavities that form the primary air containment passageways for air distribution systems shall be considered ducts or plenum chambers, shall be constructed and sealed in accordance with Section C403.2.9.2 of the Commercial Provisions of this code and shall be shown to meet duct tightness criteria below.

Duct tightness shall be verified by testing in accordance with ANSI/RESNET/ICC 380 by either individuals as defined in Section 553.993(5) or (7), Florida Statutes, or individuals licensed as set forth in Section 489.105(3)(f), (g) or (i), Florida Statutes, to be "substantially leak free" in accordance with Section R403.3.3.

☐ **R403.3.2.1 Sealed air handler.** Air handlers shall have a manufacturer's designation for an air leakage of no more than 2 percent of the design airflow rate when tested in accordance with ASHRAE 193.

☐ **R403.3.3 Duct testing (Mandatory).** Ducts shall be pressure tested to determine air leakage by one of the following methods:

1. Rough-in test: Total leakage shall be measured with a pressure differential of 0.1 inch w.g. (25 Pa) across the system, including the manufacturer's air handler enclosure if installed at the time of the test. All registers shall be taped or otherwise sealed during the test.
2 Postconstruction test: Total leakage shall be measured with a pressure differential of 0.1 inch w.g. (25 Pa) across the entire system, including the manufacturer's air handler enclosure. Registers shall be taped or otherwise sealed during the test.

Exceptions;

1. A duct air leakage test shall not be required where the ducts and air handlers are located entirely within the building thermal envelope.
2. Duct testing is not mandatory for buildings complying by Section 405 of this code. Duct leakage testing is required for Section R405 compliance where credit is taken for leakage, and a duct air leakage Qn to the outside of less than 0.080 (where Qn = duct leakage to the outside in cfm per 100 square feet of conditioned floor area tested at 25 Pascals) is indicated in the compliance report for the proposed design.

A written report of the results of the test shall be signed by the party conducting the test and provided to the code official

☐ **R403.3.5 Building cavities (Mandatory).** Building framing cavities shall not be used as ducts or plenums

☐ **R403.4 Mechanical system piping insulation (Mandatory).** Mechanical system piping capable of carrying fluids above 105°F (41°C) or below 55°F (13°C) shall be insulated to a minimum of R-3.

☐ **R403.4.1 Protection of piping insulation.** Piping insulation exposed to weather shall be protected from damage, including that caused by sunlight, moisture, equipment maintenance and wind, and shall provide shielding from solar radiation that can cause degradation of the material. Adhesive tape shall not be permitted.

☐ **R403.5.1 Heated water circulation and temperature maintenance systems (Mandatory).** If heated water circulation systems are installed, they shall be in accordance with Section R403.5.1.1. Heat trace temperature maintenance systems shall be in accordance with Section R403.5.1.2. Automatic controls, temperature sensors and pumps shall be accessible. Manual controls shall be readily accessible.

☐ **R403.5.1.1 Circulation systems.** Heated water circulation systems shall be provided with a circulation pump. The system return pipe shall be a dedicated return pipe or a cold water supply pipe. Gravity and thermosiphon circulation systems shall be prohibited. Controls for circulating hot water system pumps shall start the pump based on the identification of a demand for hot water within the occupancy. The controls shall automatically turn off the pump when the water in the circulation loop is at the desired temperature and when there is no demand for hot water.

☐ **R403.5.1.2 Heat trace systems.** Electric heat trace systems shall comply with IEEE 515.1 or UL 515. Controls for such systems shall automatically adjust the energy input to the heat tracing to maintain the desired water temperature in the piping in accordance with the times when heated water is used in the occupancy.

MANDATORY REQUIREMENTS (Continued)

☐ **R403.5.5 Heat traps (Mandatory).** Storage water heaters not equipped with integral heat traps and having vertical pipe risers shall have heat traps installed on both the inlets and outlets. External heat traps shall consist of either a commercially available heat trap or a downward and upward bend of at least 3 ½ inches (89 mm) in the hot water distribution line and cold water line located as close as possible to the storage tank.

R403.5.6 Water heater efficiencies (Mandatory).

☐ **R403.5.6.1.1 Automatic controls.** Service water-heating systems shall be equipped with automatic temperature controls capable of adjustment from the lowest to the highest acceptable temperature settings for the intended use. The minimum temperature setting range shall be from 100°F to 140°F (38°C to 60°C).

☐ **R403.5.6.1.2 Shut down.** A separate switch or a clearly marked circuit breaker shall be provided to permit the power supplied to electric service systems to be turned off. A separate valve shall be provided to permit the energy supplied to the main burner(s) of combustion types of service water-heating systems to be turned off.

☐ **R403.5.6.2 Water-heating equipment.** Water-heating equipment installed in residential units shall meet the minimum efficiencies of Table C404.2 in Chapter 4 of the Florida Building Code, Energy Conservation, Commercial Provisions, for the type of equipment installed. Equipment used to provide heating functions as part of a combination system shall satisfy all stated requirements for the appropriate water-heating category. Solar water heaters shall meet the criteria of Section R403.5.6.2.1.

☐ **R403.5.6.2.1 Solar water-heating systems.** Solar systems for domestic hot water production are rated by the annual solar energy factor of the system. The solar energy factor of a system shall be determined from the Florida Solar Energy Center Directory of Certified Solar Systems. Solar collectors shall be tested in accordance with ISO Standard 9806, Test Methods for Solar Collectors, and SRCC Standard TM-1, Solar Domestic Hot Water System and Component Test Protocol. Collectors in installed solar water-heating systems should meet the following criteria:

1. Be installed with a tilt angle between 10 degrees and 40 degrees of the horizontal; and
2. Be installed at an orientation within 45 degrees of true south.

☐ **R403.6 Mechanical ventilation (Mandatory).** The building shall be provided with ventilation that meets the requirements of the Florida Building Code, Residential, or Florida Building Code, Mechanical, as applicable, or with other approved means of ventilation including: Natural, Infiltration or Mechanical means. Outdoor air intakes and exhausts shall have automatic or gravity dampers that close when the ventilation system is not operating.

☐ **R403.6.1 Whole-house mechanical ventilation system fan efficacy.** When installed to function as a whole-house mechanical ventilation system, fans shall meet the efficacy requirements of Table R403.6.1.

Exception: Where an air handler that is integral to tested and listed HVAC equipment is used to provide whole-house mechanical ventilation, the air handler shall be powered by an electronically commutated motor.

☐ **R403.6.2 Ventilation Air.** Residential buildings designed to be operated at a positive indoor pressure or for mechanical ventilation shall meet the following criteria:

1. The design air change per hour minimums for residential buildings in ASHRAE 62.2, Ventilation for Acceptable Indoor Air Quality, shall be the maximum rates allowed for residential applications.

2. No ventilation or air-conditioning system make-up air shall be provided to conditioned space from attics, crawlspaces, attached enclosed garages or outdoor spaces adjacent to swimming pools or spas.

3. If ventilation air is drawn from enclosed space(s), then the walls of the space(s) from which air is drawn shall be insulated to a minimum of R-11 and the ceiling shall be insulated to a minimum of R-19, space permitting, or R-10 otherwise.

R403.7 Heating and cooling equipment.

☐ **R403.7.1 Equipment sizing (Mandatory).** Heating and cooling equipment shall be sized in accordance with ACCA Manual S based on the equipment loads calculated in accordance with ACCA Manual J or other approved heating and cooling calculation methodologies, based on building loads for the directional orientation of the building. The manufacturer and model number of the outdoor and indoor units (if split system) shall be submitted along with the sensible and total cooling capacities at the design conditions described in Section R302.1. This Code does not allow designer safety factors, provisions for future expansion or other factors that affect equipment sizing. System sizing calculations shall not include loads created by local intermittent mechanical ventilation such as standard kitchen and bathroom exhaust systems. New or replacement heating and cooling equipment shall have an efficiency rating equal to or greater than the minimum required by federal law for the geographic location where the equipment is installed.

TABLE R403.6.1
WHOLE-HOUSE MECHANICAL VENTILATION SYSTEM FAN EFFICACY

FAN LOCATION	AIRFLOW RATE MINIMUM (CFM)	MINIMUM EFFICACY[a] (CFM/WATT)	AIRFLOW RATE MAXIMUM (CFM)
HRV or ERV	Any	1.2 cfm/watt	Any
Range hoods	Any	2.8 cfm/watt	Any
In-line fan	Any	2.8 cfm/watt	Any
Bathroom, utility room	10	1.4 cfm/watt	<90
Bathroom, utility room	90	2.8 cfm/watt	Any

For SI: 1 cfm = 28.3 L/min.

a. When tested in accordance with HVI Standard 916

☐ **R403.7.1.1 Cooling equipment capacity.** Cooling only equipment shall be selected so that its total capacity is not less than the calculated total load but not more than 1.15 times greater than the total load calculated according to the procedure selected in Section R403.7, or the closest available size provided by the manufacturer's product lines. The corresponding latent capacity of the equipment shall not be less than the calculated latent load.
The published value for AHRI total capacity is a nominal, rating-test value and shall not be used for equipment sizing. Manufacturer's expanded performance data shall be used to select cooling-only equipment. This selection shall be based on the outdoor design dry-bulb temperature for the load calculation (or entering water temperature for water-source equipment), the blower CFM provided by the expanded performance data, the design value for entering wet-bulb temperature and the design value for entering dry-bulb temperature.

Design values for entering wet-bulb and dry-bulb temperatures shall be for the indoor dry bulb and relative humidity used for the load calculation and shall be adjusted for return side gains if the return duct(s) is installed in an unconditioned space.

Exceptions:

1. Attached single- and multiple-family residential equipment sizing may be selected so that its cooling capacity is less than the calculated total sensible load but not less than 80 percent of that load.
2. When signed and sealed by a Florida-registered engineer, in attached single- and multiple-family units, the capacity of equipment may be sized in accordance with good design practice.

R403.7.1.2 Heating equipment capacity.

☐ **R403.7.1.2.1 Heat pumps.** Heat pump sizing shall be based on the cooling requirements as calculated according to Section R403.7.1.1, and the heat pump total cooling capacity shall not be more than 1.15 times greater than the design cooling load even if the design heating load is 1.15 times greater than the design cooling load.

☐ **R403.7.1.2.2 Electric resistance furnaces.** Electric resistance furnaces shall be sized within 4 kW of the design requirements calculated according to the procedure selected in Section R403.7.1.

☐ **R403.7.1.2.3 Fossil fuel heating equipment.** The capacity of fossil fuel heating equipment with natural draft atmospheric burners shall not be less than the design load calculated in accordance with Section R403.7.1.

☐ **R403.7.1.3 Extra capacity required for special occasions.** Residences requiring excess cooling or heating equipment capacity on an intermittent basis, such as anticipated additional loads caused by major entertainment events, shall have equipment sized or controlled to prevent continuous space cooling or heating within that space by one or more of the following options:

1. A separate cooling or heating system is utilized to provide cooling or heating to the major entertainment areas.
2. A variable capacity system sized for optimum performance during base load periods is utilized.

☐ **R403.8 Systems serving multiple dwelling units (Mandatory).** Systems serving multiple dwelling units shall comply with Sections C403 and C404 of the Florida Building Code, Energy Conservation—Commercial Provisions in lieu of Section R403.

☐ **R403.9 Snow melt and ice system controls (Mandatory).** Snow- and ice-melting systems, supplied through energy service to the building, shall include automatic controls capable of shutting off the system when the pavement temperature is above 50°F (10°C), and no precipitation is falling and an automatic or manual control that will allow shutoff when the outdoor temperature is above 40°F (4.8°C).

☐ **403.10 Pools and permanent spa energy consumption (Mandatory).** The energy consumption of pools and permanent spas shall be in accordance with Sections R403.10.1 through R403.10.5.

☐ **R403.10.1 Heaters.** The electric power to heaters shall be controlled by a readily accessible on-off switch that is an integral part of the heater mounted on the exterior of the heater, or external to and within 3 feet (914 mm) of the heater. Operation of such switch shall not change the setting of the heater thermostat. Such switches shall be in addition to a circuit breaker for the power to the heater.
Gas-fired heaters shall not be equipped with continuously burning ignition pilots.

MANDATORY REQUIREMENTS (Continued)

☐ **R403.10.2 Time switches.** Time switches or other control methods that can automatically turn off and on according to a preset schedule shall be installed for heaters and pump motors. Heaters and pump motors that have built-in time switches shall be in compliance with this section.

Exceptions:
1. Where public health standards require 24-hour pump operation.
2. Pumps that operate solar- and waste-heat-recovery pool heating systems
3. Where pumps are powered exclusively from on-site renewable generation.

☐ **R403.10.3 Covers.** Outdoor heated swimming pools and outdoor permanent spas shall be equipped with a vapor-retardant cover on or at the water surface or a liquid cover or other means proven to reduce heat loss.

Exception: Where more than 70 percent of the energy for heating, computed over an operation season, is from site-recovered energy, such as from a heat pump or solar energy source, covers or other vapor-retardant means shall not be required

☐ **R403.10.4 Gas- and oil-fired pool and spa heaters.** All gas- and oil-fired pool and spa heaters shall have a minimum thermal efficiency of 82 percent for heaters manufactured on or after April 16, 2013, when tested in accordance with ANSI Z 21.56. Pool heaters fired by natural or LP gas shall not have continuously burning pilot lights.

☐ **R403.10.5 Heat pump pool heaters.** Heat pump pool heaters shall have a minimum COP of 4.0 when tested in accordance with AHRI 1160, Table 2, Standard Rating Conditions-Low Air Temperature. A test report from an independent laboratory is required to verify procedure compliance. Geothermal swimming pool heat pumps are not required to meet this standard.

☐ **R403.11 Portable spas (Mandatory).** The energy consumption of electric-powered portable spas shall be controlled by the requirements of APSP-14

☐ **R403.13 Dehumidifiers (Mandatory).** If installed, a dehumidifier shall conform to the following requirements:

1. The minimum rated efficiency of the dehumidifier shall be greater than 1.7 liters/ kWh if the total dehumidifier capacity for the house is less than 75 pints/day and greater than 2.38 liters/kWh if the total dehumidifier capacity for the house is greater than or equal to 75 pints/day.
2. The dehumidifier shall be controlled by a sensor that is installed in a location where it is exposed to mixed house air.
3. Any dehumidifier unit located in unconditioned space that treats air from conditioned space shall be insulated to a minimum of R-2.
4. Condensate disposal shall be in accordance with Section M1411.3.1 of the Florida Building Code, Residential.

☐ **R403.13.1 Ducted dehumidifiers.** Ducted dehumidifiers shall, in addition to conforming to the requirements of Section R403.13, conform to the following requirements:

1. If a ducted dehumidifier is configured with return and supply ducts both connected into the supply side of the cooling system, a backdraft damper shall be installed in the supply air duct between the dehumidifier inlet and outlet duct.
2. If a ducted dehumidifier is configured with only its supply duct connected into the supply side of the central heating and cooling system, a backdraft damper shall be installed in the dehumidifier supply duct between the dehumidifier and central supply duct.
3. A ducted dehumidifier shall not be ducted to or from a central ducted cooling system on the return duct side upstream from the central cooling evaporator coil.
4. Ductwork associated with a dehumidifier located in unconditioned space shall be insulated to a minimum of R-6.

SECTION R404
ELECTRICAL POWER AND LIGHTING SYSTEMS

☐ **R404.1 Lighting equipment (Mandatory).** Not less than 90 percent of the lamps in permanently installed luminaires shall have an efficacy of at least 45 lumens-per-watt or shall utilize lamps with an efficacy of not less than 65 lumens-per-watt.

R404.1.1 Lighting equipment (Mandatory). uel gas lighting systems shall not have continuously burning pilot lights.

2020 - AIR BARRIER AND INSULATION INSPECTION COMPONENT CRITERIA
TABLE 402.4.1.1
AIR BARRIER AND INSULATION INSPECTION COMPONENT CRITERIA[a]

Project Name:	200701 Magnolia 1BD-otf	Builder Name:	
Street:	7240 & 7338 Massachusetts ave	Permit Office:	
City, State, Zip:	Newport RIchey, FL, 34653	Permit Number:	
Owner:		Jurisdiction:	
Design Location:	FL, CLEAR_ST_PETERSBURG	County:	Pasco(Florida Climate Zone 2)

COMPONENT	AIR BARRIER CRITERIA	INSULATION INSTALLATION CRITERIA	CHECK
General requirements	A continuous air barrier shall be installed in the building envelope. The exterior thermal envelope contains a continuous air barrier. Breaks or joints in the air barrier shall be sealed.	Air-permeable insulation shall not be used as a sealing material.	
Ceiling/attic	The air barrier in any dropped ceiling/soffit shall be aligned with the insulation and any gaps in the air barrier shall be sealed. Access openings, drop down stairs or knee wall doors to unconditioned attic spaces shall be sealed.	The insulation in any dropped ceiling/soffit shall be aligned with the air barrier.	
Walls	The junction of the foundation and sill plate shall be sealed. The junction of the top plate and the top of exterior walls shall be sealed. Knee walls shall be sealed.	Cavities within corners and headers of frame walls shall be insulated by completely filling the cavity with a material having a thermal resistance of R-3 per inch minimum Exterior thermal envelope insulation for framed walls shall be installed in substantial contact and continuous alignment with the air barrier.	
Windows, skylights and doors	The space between window/door jambs and framing, and skylights and framing shall be sealed.		
Rim joists	Rim joists shall include the air barrier.	Rim joists shall be insulated.	
Floors (including above-garage and cantilevered floors)	The air barrier shall be installed at any exposed edge of insulation.	Floor framing cavity insulation shall be installed to maintain permanent contact with the underside of subfloor decking, or floor framing cavity insulation shall be permitted to be in contact with the top side of sheathing, or continuous insulation installed on the underside of floor framing and extends from the bottom to the top of all perimeter floor framing members.	
Crawl space walls	Exposed earth in unvented crawl spaces shall be covered with a Class I vapor retarder with overlapping joints taped.	Where provided instead of floor insulation, insulation shall be permanently attached to the crawlspace walls.	
Shafts, penetrations	Duct shafts, utility penetrations, and flue shafts opening to exterior or unconditioned space shall be sealed.		
Narrow cavities		Batts in narrow cavities shall be cut to fit, or narrow cavities shall be filled by insulation that on installation readily conforms to the available cavity spaces.	
Garage separation	Air sealing shall be provided between the garage and conditioned spaces.		
Recessed lighting	Recessed light fixtures installed in the building thermal envelope shall be sealed to the finished surface.	Recessed light fixtures installed in the building thermal envelope shall be air tight and IC rated.	
Plumbing and wiring		Batt insulation shall be cut neatly to fit around wiring and plumbing in exterior walls, or insulation that on installation readily conforms to available space shall extend behind piping and wiring.	
Shower/tub on exterior wall	The air barrier installed at exterior walls adjacent to showers and tubs shall separate them from the showers and tubs.	Exterior walls adjacent to showers and tubs shall be insulated.	
Electrical/phone box on exterior walls	The air barrier shall be installed behind electrical or communication boxes or air-sealed boxes shall be installed.		
HVAC register boots	HVAC supply and return register boots that penetrate building thermal envelope shall be sealed to the sub-floor, wall covering or ceiling penetrated by the boot.		
Concealed sprinklers	When required to be sealed, concealed fire sprinklers shall only be sealed in a manner that is recommended by the manufacturer. Caulking or other adhesive sealants shall not be used to fill voids voids between fire sprinkler cover plates and walls or ceilings.		

a. In addition, inspection of log walls shall be in accordance with the provisions of ICC-400.

Envelope Leakage Test Report (Blower Door Test)
Residential Prescriptive, Performance or ERI Method Compliance
2020 Florida Building Code, Energy Conservation, 7th Edition

Jurisdiction:	Permit #:

Job Information

Builder: Community: Lot: NA

Address: 7240 & 7338 Massachusetts ave

City: Newport RIchey State: FL Zip: 34653

Air Leakage Test Results *Passing results must meet either the Performance, Prescriptive, or ERI Method*

○ **PRESCRIPTIVE METHOD-**The building or dwelling unit shall be tested and verified as having an air leakage rate of not exceeding 7 air changes per hour at a pressure of 0.2 inch w.g. (50 Pascals) in Climate Zones 1 and 2.

● **PERFORMANCE or ERI METHOD-**The building or dwelling unit shall be tested and verified as having an air leakage rate of not exceeding the selected ACH(50) value, as shown on Form R405-2020 (Performance) or R406-2020 (ERI), section labeled as infiltration, sub-section ACH50.

ACH(50) specified on Form R405-2020-Energy Calc (Performance) or R406-2020 (ERI): 7.000

_____ x 60 ÷ 6710 = _____
CFM(50) Building Volume ACH(50)

☐ **PASS**

☐ When ACH(50) is less than 3, Mechanical Ventilation installation must be verified by building department.

Method for calculating building volume:

○ Retrieved from architectural plans

● Code software calculated

○ Field measured and calculated

R402.4.1.2 Testing. Testing shall be conducted in accordance with ANSI/RESNET/ICC 380 and reported at a pressure of 0.2 inch w.g. (50 Pascals). Testing shall be conducted by either individuals as defined in Section 553.993(5) or (7), *Florida Statues.*or individuals licensed as set forth in Section 489.105(3)(f), (g), or (i) or an approved third party. A written report of the results of the test shall be signed by the party conducting the test and provided to the*code official.* Testing shall be performed at any time after creation of all penetrations of the *building thermal envelope.*

During testing:
1. Exterior windows and doors, fireplace and stove doors shall be closed, but not sealed, beyond the intended weatherstripping or other infiltration control measures.
2. Dampers including exhaust, intake, makeup air, back draft and flue dampers shall be closed, but not sealed beyond intended infiltration control measures.
3. Interior doors, if installed at the time of the test, shall be open.
4. Exterior doors for continuous ventilation systems and heat recovery ventilators shall be closed and sealed.
5. Heating and cooling systems, if installed at the time of the test, shall be turned off.
6. Supply and return registers, if installed at the time of the test, shall be fully open.

Testing Company

Company Name: _____ Phone: _____

I hereby verify that the above Air Leakage results are in accordance with the 2020 7th Edition Florida Building Code Energy Conservation requirements according to the compliance method selected above.

Signature of Tester: _____ Date of Test: _____

Printed Name of Tester: _____

License/Certification #: _____ Issuing Authority: _____

BID SET 08/05/2022

Duct Leakage Test Report

Residential Prescriptive, Performance or ERI Method Compliance
2020 Florida Building Code, Energy Conservation, 7th Edition

Jurisdiction:	Permit #:

Job Information

Builder: Community: Lot: NA

Address: 7240 & 7338 Massachusetts ave

City: Newport RIchey State: FL Zip: 34653

Duct Leakage Test Results

System 1	_____	cfm25
System 2	_____	cfm25
System 3	_____	cfm25
Sum of others	_____	cfm25
Total of all	_____	cfm25

_____ ÷ 671 = _____Qn
Total of all systems — Total Conditioned Square Footage

☐ **PASS** ☐ **FAIL**

○ **Prescriptive Method** cfm25 (Total)

To qualify as "substantially leak free" Qn Total must be less than or equal to 0.04 if air handler unit is installed. If air handler unit is not installed, Qn Total must be less than or equal to 0.03. This testing method meets the requirements in accordance with Section R403.3.3.

Is the air handler unit installed during testing? ☐ YES (= .04 Qn) ☐ NO (= .03 Qn)

● **Performance/ERI Method** cfm25 (Out or Total)

To qualify using this method, Qn must not be greater than the proposed duct leakage Qn specified on Form R405-2020 or R406-2020.

Leakage Type selected on Form R405-2020 (EnergyCalc) or R406-2020	*Qn specified on Form R405-2020 (EnergyCalc) or R406-2020*
Proposed Leak Free	0.03

Duct tightness shall be verified by testing in accordance with ANSI/RESNET/ICC380 by either individuals as defined in Section 553.993(5) or (7), Florida Statutes, or individuals licensed as set forth in Section 489.105(3)(f), (g) or (i), Florida Statutes.

Testing Company

Company Name: _____ Phone: _____

I hereby verify that the above duct leakage testing results are in accordance with the Florida Building Code requirements with the selected compliance path as stated above, either the Prescriptive Method or Performance Method.

Signature of Tester: _____ Date of Test: _____

Printed Name of Tester: _____

License/Certification #: _____ Issuing Authority: _____

Air Handler #1 - AHU-1 (1BD) - Total Load Summary

Air Handler Description:	AHU-1 (1BD) Constant Volume - Proportion
Supply Air Fan:	Draw-Thru with program estimated horsepower of 0.08 HP
Fan Input:	90% motor and fan efficiency with 0.5 in. water across the fan
Sensible Heat Ratio:	0.97 --- This system occurs 1 time(s) in the building. ---

Air System Peak Time:	5pm in August.
Outdoor Conditions:	Clg: 91° DB, 77° WB, 120.09 grains, Htg: 42° DB
Indoor Conditions:	Clg: 75° DB, 50% RH, Htg: 70° DB

Summer: Ventilation controls outside air, ----- Winter: Ventilation controls outside air.

Room Space sensible loss:	8,350	Btuh				
Infiltration sensible loss:	0	Btuh	0	CFM		
Outside Air sensible loss:	1,355	Btuh	45	CFM		
Supply Duct sensible loss:	0	Btuh				
Return Duct sensible loss:	0	Btuh				
Return Plenum sensible loss:	0	Btuh				
Total System sensible loss:					9,705	Btuh

Heating Supply Air: 8,350 / (1.000 X 1.08 X 25) =	309	CFM
Winter Vent Outside Air (14.5% of supply) =	45	CFM

Room space sensible gain:	19,650	Btuh				
Infiltration sensible gain:	0	Btuh				
Draw-thru fan sensible gain:	200	Btuh				
Supply duct sensible gain:	0	Btuh				
Reserve sensible gain:	0	Btuh				
Total sensible gain on supply side of coil:					19,850	Btuh

Cooling Supply Air: 19,850 / (1.000 X 1.1 X 20) =	903	CFM
Summer Vent Outside Air (5.0% of supply) =	45	CFM

Return duct sensible gain:	0	Btuh				
Return plenum sensible gain:	0	Btuh				
Outside air sensible gain:	792	Btuh	45	CFM		
Blow-thru fan sensible gain:	0	Btuh				
Total sensible gain on return side of coil:					792	Btuh
Total sensible gain on air handling system:					20,642	Btuh

Room space latent gain:	660	Btuh				
Infiltration latent gain:	0	Btuh				
Outside air latent gain:	1,619	Btuh				
Total latent gain on air handling system:					2,279	Btuh
Total system sensible and latent gain:					22,921	Btuh

Check Figures

Total Air Handler Supply Air (based on a 20° TD):	903	CFM
Total Air Handler Vent. Air (4.99% of Supply):	45	CFM
Total Conditioned Air Space:	671	Sq.ft
Supply Air Per Unit Area:	1.3451	CFM/Sq.ft
Area Per Cooling Capacity:	351.3	Sq.ft/Ton
Cooling Capacity Per Area:	0.0028	Tons/Sq.ft
Heating Capacity Per Area:	14.46	Btuh/Sq.ft
Total Heating Required With Outside Air:	9,705	Btuh
Total Cooling Required With Outside Air:	1.91	Tons

BID SET 08/05/2022

RESIDENTIAL ENERGY CONSERVATION CODE DOCUMENTATION CHECKLIST

Florida Department of Business and Professional Regulation
Simulated Performance Alternative (Performance) Method

Applications for compliance with the 2020 Florida Building Code, Energy Conservation via the Residential Simulated Performance Alternative shall include:

- ☑ *This checklist*
- ☑ *Form R405-2020 report*
- ☑ *Input summary checklist that can be used for field verification (usually four pages/may be greater)*
- ☑ *Energy Performance Level (EPL) Display Card (one page)*
- ☑ *HVAC system sizing and selection based on ACCA Manual S or per exceptions provided in Section R403.7*
- ☑ *Mandatory Requirements (five pages)*

Required prior to CO:

- ☑ *Air Barrier and Insulation Inspection Component Criteria checklist (Table R402.4.1.1 - one page)*
- ☑ *A completed 2020 Envelope Leakage Test Report (usually one page); exception in R402.4 allows dwelling units of R-2 Occupancies and multiple attached single family dwellings to comply with Section C402.5*
- ☑ *If Form R405 duct leakage type indicates anything other than "default leakage", then a completed 2020 Duct Leakage Test Report - Performance Method (usually one page)*

.

☑ HVAC Load Calculations (Manual J's)

THIS ITEM HAS BEEN ELECTRONICALLY SIGNED AND SEALED BY MICHAEL A. COSTELLO, PE USING A DIGITAL SIGNATURE AND DATE. PRINTED COPIES OF THIS DOCUMENT ARE NOT CONSIDERED SIGNED AND SEALED AND THE SIGNATURE MUST BE VERIFIED ON ANY ELECTRONIC COPIES.

BID SET 08/05/2022

FORM R405-2020

FLORIDA ENERGY EFFICIENCY CODE FOR BUILDING CONSTRUCTION

Florida Department of Business and Professional Regulation - Residential Performance Method

Project Name:	200701 Magnolia 2BD	Builder Name:	
Street:	7240 & 7338 Massachusetts ave	Permit Office:	
City, State, Zip:	Newport RIchey, FL, 34653	Permit Number:	
Owner:		Jurisdiction:	
Design Location:	FL, CLEAR_ST_PETERSBURG	County:	Pasco(Florida Climate Zone 2)

1. New construction or existing — New (From Plans)
2. Single family or multiple family — Attached
3. Number of units, if multiple family — 1
4. Number of Bedrooms — 2
5. Is this a worst case? — Yes
6. Conditioned floor area above grade (ft²) — 857
   Conditioned floor area below grade (ft²) — 0
7. Windows(119.0 sqft.)

	Description	Area
a. U-Factor:	Sgl, U=0.50	119.00 ft²
SHGC:	SHGC=0.50	
b. U-Factor:	N/A	ft²
SHGC:		
c. U-Factor:	N/A	ft²
SHGC:		

Area Weighted Average Overhang Depth: 0.000 ft
Area Weighted Average SHGC: 0.500

8. Skylights

	Description	Area
U-Factor:(AVG)	N/A	N/A ft²
SHGC(AVG):	N/A	

9. Floor Types

	Insulation	Area
a. N/A	R=	ft²
b. N/A	R=	ft²
c. N/A	R=	ft²

10. Wall Types(785.0 sqft.)

	Insulation	Area
a. Concrete Block - Ext Insul, Exterior	R=5.0	785.00 ft²
b. N/A	R=	ft²
c. N/A	R=	ft²
d. N/A	R=	ft²

11. Ceiling Types(857.0 sqft.)

	Insulation	Area
a. Roof Deck (Unvented)	R=30.0	857.00 ft²
b. N/A	R=	ft²
c. N/A	R=	ft²

12. Ducts, location & insulation level — R — ft²
    a. Sup: 1st Floor, Ret: 1st Floor, AH: 1st Floor — 6 — 134.2
    b.
    c.
13. Cooling Systems — kBtu/hr — Efficiency
    a. Central Unit — 27.2 — SEER:16.00
14. Heating Systems — kBtu/hr — Efficiency
    a. Electric Strip Heat — 17.0 — COP:1.00
15. Hot Water Systems
    a. Electric — Cap: 46 gallons, EF: 0.920
    b. Conservation features — None
16. Credits — Pstat

Glass/Floor Area: 0.139

Total Proposed Modified Loads: 36.00
Total Baseline Loads: 36.57

PASS

I hereby certify that the plans and specifications covered by this calculation are in compliance with the Florida Energy Code.

PREPARED BY: Michael A. Costello, PE

DATE: 07/06/2022

I hereby certify that this building, as designed, is in compliance with the Florida Energy Code.

OWNER/AGENT: _____

DATE: _____

Review of the plans and specifications covered by this calculation indicates compliance with the Florida Energy Code. Before construction is completed this building will be inspected for compliance with Section 553.908 Florida Statutes.

BUILDING OFFICIAL: _____

DATE: _____

- Compliance requires certification by the air handler unit manufacturer that the air handler enclosure qualifies as certified factory-sealed in accordance with R403.3.2.1.
- Compliance with a proposed duct leakage Qn requires a PERFORMANCE Duct Leakage Test Report confirming duct leakage to outdoors, tested in accordance with ANSI/RESNET/ICC 380, is not greater than 0.030 Qn for whole house.
- Compliance requires an Air Barrier and Insulation Inspection Checklist in accordance with R402.4.1.1 and this project requires a PERFORMANCE envelope leakage test report with envelope leakage no greater than 7.00 ACH50 (R402.4.1.2).

BID SET 08/05/2022

FORM R405-2020

INPUT SUMMARY CHECKLIST REPORT

PROJECT

Title:	200701 Magnolia 2BD			Address type:	Street Address
Building Type:	User	Bedrooms:	2	Lot #:	---
Owner:		Conditioned Area:	857	Block/SubDivision:	---
		Total Stories:	1	PlatBook:	---
Builder Name:		Worst Case:	Yes	Street:	7240 & 7338 Massachusetts ave
Permit Office:		Rotate Angle:	270	County:	Pasco
Jurisdiction:		Cross Ventilation:		City, State, Zip:	Newport RIchey,
Family Type:	Attached	Whole House Fan:			FL, 34653
New/Existing:	New (From Plans)	Terrain:	Suburban		
Year Construct:	2022	Shielding:	Suburban		
Comment:					

CLIMATE

√	Design Location	Tmy Site	Design Temp 97.5%	Design Temp 2.5%	Int Design Temp Winter	Int Design Temp Summer	Heating Degree Days	Design Moisture	Daily temp Range
___	FL, CLEAR_ST_PETERSBUR	FL_ST_PETERSBURG_CLEAR	39	91	70	75	733	54	Medium

BLOCKS

√	Number	Name	Area	Volume
___	1	Block1	857	8570

SPACES

√	Number	Name	Area	Volume	Kitchen	Occupants	Bedrooms	Finished	Cooled	Heated
___	1	1st Floor	857	8570	Yes	3	2	Yes	Yes	Yes

FLOORS (Total Exposed Area = 0 sq.ft.)

√	#	Floor Type	Space	Exposed Perim	Perimeter R-Value	Area	U-Factor	Joist R-Value	Tile	Wood	Carpet

ROOF

√	#	Type	Materials	Roof Area	Gable Area	Roof Color	Rad Barr	Solar Absor.	SA Tested	Emitt	Emitt Tested	Deck Insul.	Pitch (deg)
___	1	Gable or shed	Composition shingles	928 ft²	178 ft²	Light	N	0.3	No	0.95	No	30	22.62

ATTIC

√	#	Type	Ventilation	Vent Ratio (1 in)	Area	RBS	IRCC
___	1	No attic	Unvented	0	857 ft²	N	N

CEILING (Total Exposed Area = 857 sq.ft.)

√	#	Ceiling Type	Space	R-Value	Ins. Type	Area	U-Factor	Framing Frac.	Truss Type
___	1	Under Attic(Unvented)	1st Floor	30.0	Blown	857.0ft²	0.020	0.11	Wood

BID SET 08/05/2022

FORM R405-2020

INPUT SUMMARY CHECKLIST REPORT

WALLS (Total Exposed Area = 785 sq.ft.)

Note: First wall orientation below is as entered. Actual orientation is modified by the rotate angle (270 degrees) as shown in the "Project" section on page 1.

√	#	Ornt	Adjacent To	Wall Type	Space	Cavity R-Value	Width Ft	Width In	Height Ft	Height In	Area sq.ft.	U-Factor	Sheath R-Value	Frm. Frac.	Solar Absor.	Below Grade
___	1	N=>W	Exterior	Conc. Blk - Ext Ins	1st Floor	5.0	23.0	0	10.0	0	230.0	0.117	0	0	0.60	0 %
___	2	S=>E	Exterior	Conc. Blk - Ext Ins	1st Floor	5.0	23.0	0	10.0	0	230.0	0.117	0	0	0.60	0 %
___	3	W=>S	Exterior	Conc. Blk - Ext Ins	1st Floor	5.0	21.5	0	10.0	0	215.0	0.117	0	0	0.60	0 %
___	4	E=>N	Exterior	Conc. Blk - Ext Ins	1st Floor	5.0	11.0	0	10.0	0	110.0	0.117	0	0	0.60	0 %

DOORS (Total Exposed Area = 0 sq.ft.)

√	#	Ornt	Adjacent To	Door Type	Space	Storms	U-Value	Width Ft In	Height Ft In	Area

WINDOWS (Total Exposed Area = 119 sq.ft.)

√	#	Ornt	Wall ID	Frame	Panes	NFRC	U-Factor	SHGC	Imp	Storm	Total Area (ft²)	Same Units	Width (ft)	Height (ft)	--Overhang-- Depth (ft)	Sep. (ft)	Interior Shade	Screen
___	1	N=>W	1	Metal	Low-E Single	Y	0.50	0.50	N	N	13.3	1	4.00	3.33	0.0	0.0	Drapes/blinds	None
___	2	N=>W	1	Metal	Low-E Single	Y	0.50	0.50	N	N	39.5	1	6.00	6.58	0.0	0.0	Drapes/blinds	None
___	3	S=>E	2	Metal	Low-E Single	Y	0.50	0.50	N	N	13.3	1	4.00	3.33	0.0	0.0	Drapes/blinds	None
___	4	W=>S	3	Metal	Low-E Single	Y	0.50	0.50	N	N	13.3	1	4.00	3.33	0.0	0.0	Drapes/blinds	None
___	5	S=>E	2	Metal	Low-E Single	Y	0.50	0.50	N	N	39.5	1	6.00	6.58	0.0	0.0	Drapes/blinds	None

INFILTRATION

√	#	Scope	Method	SLA	CFM50	ELA	EqLA	ACH	ACH50	Space(s)
___	1	Wholehouse	Proposed ACH(50)	0.00044	1000	54.85	102.98	0.1697	7.0	All

MASS

√	#	Mass Type	Area	Thickness	Furniture Fraction	Space
___	1	Default(8 lbs/sq.ft.)	0 ft²	0 ft	0.30	1st Floor

HEATING SYSTEM

√	#	System Type	Subtype	AHRI #	Efficiency	Capacity kBtu/hr	----Geothermal HeatPump---- Entry	Power	Volt	Current	Ducts	Block
___	1	Electric Strip Heat	None		COP: 1.00	17.0		0.00	0.00	0.00	sys#1	1

COOLING SYSTEM

√	#	System Type	Subtype/Speed	AHRI #	Efficiency	Capacity kBtu/hr	Air Flow cfm	SHR	Duct	Block
___	1	Central Unit	Split/Single		SEER:16.0	27.2	1000	0.84	sys#1	1

FORM R405-2020

INPUT SUMMARY CHECKLIST REPORT

HOT WATER SYSTEM

√ #	System Type	Subtype	Location	EF(UEF)	Cap	Use	SetPnt	Fixture Flow	Pipe Ins.	Pipe length
___ 1	Electric	None	1st Floor	0.92 (0.92)	46.00 gal	40 gal	120 deg	Standard	=>R-3	99

	Recirculation System	Recirc Control Type	Loop length	Branch length	Pump power	DWHR	Facilities Connected	Equal Flow	DWHR Eff	Other Credits
___ 1	No		NA	NA	NA	No	NA	NA	NA	None

DUCTS

√ Duct #	---------Supply--------- Location	R-Value	Area	---------Return--------- Location	R-Value	Area	Leakage Type	Air Handler	CFM 25 TOT	CFM 25 OUT	QN	RLF	HVAC # Heat	Cool
___ 1	1st Floor	6.0	134 ft²	1st Floor	6.0	34 ft²	Prop. Leak Free	1st Floor	---	---	0.03	0.50	1	1

MECHANICAL VENTILATION

√ Type	Supply CFM	Exhaust CFM	HRV	Fan	Run Time	Heating System	Cooling System
___ Runtime Vent	45.0	0.0	0.0	0.0 W	0 %	1 - Electric Strip Heat	1 - Central Unit

TEMPERATURES

Programable Thermostat: Y Ceiling Fans: N

	Jan	Feb	Mar	Apr	May	Jun	Jul	Aug	Sep	Oct	Nov	Dec
Cooling	[ ]	[ ]	[ ]	[ ]	[ ]	[X]	[X]	[X]	[X]	[ ]	[ ]	[ ]
Heating	[X]	[X]	[X]	[ ]	[ ]	[ ]	[ ]	[ ]	[ ]	[ ]	[X]	[X]
Venting	[ ]	[ ]	[X]	[X]	[ ]	[ ]	[ ]	[ ]	[ ]	[X]	[X]	[ ]

√ Thermostat Schedule: HERS 2006 Reference

Schedule Type		Hours 1	2	3	4	5	6	7	8	9	10	11	12
___ Cooling (WD)	AM	78	78	78	78	78	78	78	78	80	80	80	80
	PM	80	80	78	78	78	78	78	78	78	78	78	78
___ Cooling (WEH)	AM	78	78	78	78	78	78	78	78	78	78	78	78
	PM	78	78	78	78	78	78	78	78	78	78	78	78
___ Heating (WD)	AM	66	66	66	66	66	68	68	68	68	68	68	68
	PM	68	68	68	68	68	68	68	68	68	68	66	66
___ Heating (WEH)	AM	66	66	66	66	66	68	68	68	68	68	68	68
	PM	68	68	68	68	68	68	68	68	68	68	66	66

FORM R405-2020

ENERGY PERFORMANCE LEVEL (EPL) DISPLAY CARD

ESTIMATED ENERGY PERFORMANCE INDEX* = 98

The lower the EnergyPerformance Index, the more efficient the home.

7240 & 7338 Massachusetts ave,Newport RIchey,FL,34653

1. New construction or existing		New (From Plans)
2. Single family or multiple family		Attached
3. Number of units, if multiple family		1
4. Number of Bedrooms		2
5. Is this a worst case?		Yes
6. Conditioned floor area above grade (ft²)		857
Conditioned floor area below grade (ft²)		0
7. Windows**	Description	Area
a. U-Factor:	Sgl, U=0.50	119.00 ft²
SHGC:	SHGC=0.50	
b. U-Factor:	N/A	ft²
SHGC:		
c. U-Factor:	N/A	ft²
SHGC:		
Area Weighted Average Overhang Depth:		0.000 ft
Area Weighted Average SHGC:		0.500
8. Skylights	Description	Area
U-Factor:(AVG)	N/A	N/A ft²
SHGC(AVG):	N/A	

9. Floor Types	Insulation	Area
a. N/A	R=	ft²
b. N/A	R=	ft²
c. N/A	R=	ft²

10. Wall Types(785.0 sqft.)	Insulation	Area
a. Concrete Block - Ext Insul, Exterior	R=5.0	785.00 ft²
b. N/A	R=	ft²
c. N/A	R=	ft²
d. N/A	R=	ft²

11. Ceiling Types(857.0 sqft.)	Insulation	Area
a. Roof Deck (Unvented)	R=30.0	857.00 ft²
b. N/A	R=	ft²
c. N/A	R=	ft²

12. Ducts, location & insulation level	R	ft²
a. Sup: 1st Floor, Ret: 1st Floor, AH: 1st Floor	6	134.2
b.		
c.		

13. Cooling Systems	kBtu/hr	Efficiency
a. Central Unit	27.2	SEER:16.00

14. Heating Systems	kBtu/hr	Efficiency
a. Electric Strip Heat	17.0	COP:1.00

15. Hot Water Systems	
a. Electric	Cap: 46 gallons EF: 0.920
b. Conservation features	None
16. Credits	Pstat

I certify that this home has complied with the Florida Energy Efficiency Code for Building Construction through the above energy saving features which will be installed (or exceeded) in this home before final inspection. Otherwise, a new EPL Display Card will be completed based on installed Code compliant features.

Builder Signature: _____ Date: _____

Address of New Home: 7240 & 7338 Massachusetts ave City/FL Zip: Newport RIchey,FL,34653

*Note: This is not a Building Energy Rating. If your Index is below 70, your home may qualify for energy efficient mortgage (EEM) incentives if you obtain a Florida Energy Rating. For information about the Florida Building Code, Energy Conservation, contact the Florida Building Commission's support staff.

**Label required by Section R303.1.3 of the Florida Building Code, Energy Conservation, if not DEFAULT.

BID SET 08/05/2022

Florida Building Code, Energy Conservation, 7th Edition (2020)
Mandatory Requirements for Residential Performance, Prescriptive and ERI Methods

ADDRESS:	7240 & 7338 Massachusetts ave Newport RIchey, FL 34653	Permit Number:	

MANDATORY REQUIREMENTS - See individual code sections for full details.

SECTION R401 GENERAL

☐ **R401.3 Energy Performance Level (EPL) display card - (Mandatory).** The building official shall require that an energy performance level (EPL) display card be completed and certified by the builder to be accurate and correct before final approval of the building for occupancy. Florida law (Section 553.9085, Florida Statutes) requires the EPL display card to be included as an addendum to each sales contract for both presold and nonpresold residential buildings. The EPL display card contains information indicating the energy performance level and efficiencies of components installed in a dwelling unit. The building official shall verify that the EPL display card completed and signed by the builder accurately reflects the plans and specifications submitted to demonstrate code compliance for the building. A copy of the EPL display card can be found in Appendix RD.

SECTION R402 BUILDING THERMAL ENVELOPE

☐ **R402.4 Air leakage (Mandatory).** The building thermal envelope shall be constructed to limit air leakage in accordance with the requirements of Sections R402.4.1 through R402.4.5.

> **Exception:** Dwelling units of R-2 Occupancies and multiple attached single family dwellings shall be permitted to comply with Section C402.5.

☐ **R402.4.1 Building thermal envelope.** The building thermal envelope shall comply with Sections R402.4.1.1 and R402.4.1.2. The sealing methods between dissimilar materials shall allow for differential expansion and contraction.

☐ **R402.4.1.1 Installation.** The components of the building thermal envelope as listed in Table R402.4.1.1 shall be installed in accordance with the manufacturer's instructions and the criteria listed in Table R402.4.1.1, as applicable to the method of construction. Where required by the code official, an approved third party shall inspect all components and verify compliance.

☐ **R402.4.1.2 Testing.** The building or dwelling unit shall be tested and verified as having an air leakage rate not exceeding seven air changes per hour in Climate Zones 1 and 2, and three air changes per hour in Climate Zones 3 through 8. Testing shall be conducted in accordance with ANSI/RESNET/ICC 380 and reported at a pressure of 0.2 inch w.g. (50 pascals). Testing shall be conducted by either individuals as defined in Section 553.993(5) or (7), Florida Statutes, or individuals licensed as set forth in Section 489.105(3)(f), (g) or (i) or an approved third party. A written report of the results of the test shall be signed by the party conducting the test and provided to the code official. Testing shall be performed at any time after creation of all penetrations of the building thermal envelope.

> **Exception:** Testing is not required for additions, alterations, renovations, or repairs, of the building thermal envelope of existing buildings in which the new construction is less than 85 percent of the building thermal envelope.

During testing:
1. Exterior windows and doors, fireplace and stove doors shall be closed, but not sealed, beyond the intended weatherstripping or other infiltration control measures.
2. Dampers including exhaust, intake, makeup air, backdraft and flue dampers shall be closed, but not sealed beyond intended infiltration control measures.
3. Interior doors, if installed at the time of the test, shall be open.
4. Exterior doors for continuous ventilation systems and heat recovery ventilators shall be closed and sealed.
5. Heating and cooling systems, if installed at the time of the test, shall be turned off.
6. Supply and return registers, if installed at the time of the test, shall be fully open.

☐ **R402.4.2 Fireplaces.** New wood-burning fireplaces shall have tight-fitting flue dampers or doors, and outdoor combustion air. Where using tight-fitting doors on factory-built fireplaces listed and labeled in accordance with UL 127, the doors shall be tested and listed for the fireplace. Where using tight-fitting doors on masonry fireplaces, the doors shall be listed and labeled in accordance with UL 907.

☐ **R402.4.3 Fenestration air leakage.** Windows, skylights and sliding glass doors shall have an air infiltration rate of no more than 0.3 cfm per square foot (1.5 L/s/m2), and swinging doors no more than 0.5 cfm per square foot (2.6 L/s/m2), when tested according to NFRC 400 or AAMA/ WDMA/CSA 101/I.S.2/A440 by an accredited, independent laboratory and listed and labeled by the manufacturer.

> **Exception:** Site-built windows, skylights and doors.

☐ **R402.4.4 Rooms containing fuel - burning appliances.** In Climate Zones 3 through 8, where open combustion air ducts provide combustion air to open combustion fuel burning appliances, the appliances and combustion air opening shall be located outside the building thermal envelope or enclosed in a room, isolated from inside the thermal envelope. Such rooms shall be sealed and insulated in accordance with the envelope requirements of Table R402.1.2, where the walls, floors and ceilings shall meet not less than the basement wall R-value requirement. The door into the room shall be fully gasketed and any water lines and ducts in the room insulated in accordance with Section R403. The combustion air duct shall be insulated where it passes through conditioned space to a minimum of R-8.

> **Exceptions:**
> 1. Direct vent appliances with both intake and exhaust pipes installed continuous to the outside.
> 2. Fireplaces and stoves complying with Section R402.4.2 and Section R1006 of the Florida Building Code, Residential.

MANDATORY REQUIREMENTS (Continued)

☐ **R402.4.5 Recessed lighting.** Recessed luminaires installed in the building thermal envelope shall be sealed to limit air leakage between conditioned and unconditioned spaces. All recessed luminaires shall be IC-rated and labeled as having an air leakage rate not more than 2.0 cfm (0.944 L/s) when tested in accordance with ASTM E283 at a 1.57 psf (75 Pa) pressure differential. All recessed luminaires shall be sealed with a gasket or caulk between the housing and the interior wall or ceiling covering.

SECTION R403 SYSTEMS

R403.1 Controls

☐ **R403.1.1 Thermostat provision (Mandatory).** At least one thermostat shall be provided for each separate heating and cooling system

☐ **R403.1.3 Heat pump supplementary heat (Mandatory).** Heat pumps having supplementary electric-resistance heat shall have controls that, except during defrost, prevent supplemental heat operation when the heat pump compressor can meet the heating load.

☐ **R403.3.2 Sealing (Mandatory).** All ducts, air handlers, filter boxes and building cavities that form the primary air containment passageways for air distribution systems shall be considered ducts or plenum chambers, shall be constructed and sealed in accordance with Section C403.2.9.2 of the Commercial Provisions of this code and shall be shown to meet duct tightness criteria below.

Duct tightness shall be verified by testing in accordance with ANSI/RESNET/ICC 380 by either individuals as defined in Section 553.993(5) or (7), Florida Statutes, or individuals licensed as set forth in Section 489.105(3)(f), (g) or (i), Florida Statutes, to be "substantially leak free" in accordance with Section R403.3.3.

☐ **R403.3.2.1 Sealed air handler.** Air handlers shall have a manufacturer's designation for an air leakage of no more than 2 percent of the design airflow rate when tested in accordance with ASHRAE 193.

☐ **R403.3.3 Duct testing (Mandatory).** Ducts shall be pressure tested to determine air leakage by one of the following methods:

1. Rough-in test: Total leakage shall be measured with a pressure differential of 0.1 inch w.g. (25 Pa) across the system, including the manufacturer's air handler enclosure if installed at the time of the test. All registers shall be taped or otherwise sealed during the test.
2 Postconstruction test: Total leakage shall be measured with a pressure differential of 0.1 inch w.g. (25 Pa) across the entire system, including the manufacturer's air handler enclosure. Registers shall be taped or otherwise sealed during the test.

Exceptions;

1. A duct air leakage test shall not be required where the ducts and air handlers are located entirely within the building thermal envelope.
2. Duct testing is not mandatory for buildings complying by Section 405 of this code. Duct leakage testing is required for Section R405 compliance where credit is taken for leakage, and a duct air leakage Qn to the outside of less than 0.080 (where Qn = duct leakage to the outside in cfm per 100 square feet of conditioned floor area tested at 25 Pascals) is indicated in the compliance report for the proposed design.

A written report of the results of the test shall be signed by the party conducting the test and provided to the code official

☐ **R403.3.5 Building cavities (Mandatory).** Building framing cavities shall not be used as ducts or plenums

☐ **R403.4 Mechanical system piping insulation (Mandatory).** Mechanical system piping capable of carrying fluids above 105°F (41°C) or below 55°F (13°C) shall be insulated to a minimum of R-3.

☐ **R403.4.1 Protection of piping insulation.** Piping insulation exposed to weather shall be protected from damage, including that caused by sunlight, moisture, equipment maintenance and wind, and shall provide shielding from solar radiation that can cause degradation of the material. Adhesive tape shall not be permitted.

☐ **R403.5.1 Heated water circulation and temperature maintenance systems (Mandatory).** If heated water circulation systems are installed, they shall be in accordance with Section R403.5.1.1. Heat trace temperature maintenance systems shall be in accordance with Section R403.5.1.2. Automatic controls, temperature sensors and pumps shall be accessible. Manual controls shall be readily accessible.

☐ **R403.5.1.1 Circulation systems.** Heated water circulation systems shall be provided with a circulation pump. The system return pipe shall be a dedicated return pipe or a cold water supply pipe. Gravity and thermosiphon circulation systems shall be prohibited. Controls for circulating hot water system pumps shall start the pump based on the identification of a demand for hot water within the occupancy. The controls shall automatically turn off the pump when the water in the circulation loop is at the desired temperature and when there is no demand for hot water.

☐ **R403.5.1.2 Heat trace systems.** Electric heat trace systems shall comply with IEEE 515.1 or UL 515. Controls for such systems shall automatically adjust the energy input to the heat tracing to maintain the desired water temperature in the piping in accordance with the times when heated water is used in the occupancy.

MANDATORY REQUIREMENTS (Continued)

☐ **R403.5.5 Heat traps (Mandatory).** Storage water heaters not equipped with integral heat traps and having vertical pipe risers shall have heat traps installed on both the inlets and outlets. External heat traps shall consist of either a commercially available heat trap or a downward and upward bend of at least 3 ½ inches (89 mm) in the hot water distribution line and cold water line located as close as possible to the storage tank.

R403.5.6 Water heater efficiencies (Mandatory).

☐ **R403.5.6.1.1 Automatic controls.** Service water-heating systems shall be equipped with automatic temperature controls capable of adjustment from the lowest to the highest acceptable temperature settings for the intended use. The minimum temperature setting range shall be from 100°F to 140°F (38°C to 60°C).

☐ **R403.5.6.1.2 Shut down.** A separate switch or a clearly marked circuit breaker shall be provided to permit the power supplied to electric service systems to be turned off. A separate valve shall be provided to permit the energy supplied to the main burner(s) of combustion types of service water-heating systems to be turned off.

☐ **R403.5.6.2 Water-heating equipment.** Water-heating equipment installed in residential units shall meet the minimum efficiencies of Table C404.2 in Chapter 4 of the Florida Building Code, Energy Conservation, Commercial Provisions, for the type of equipment installed. Equipment used to provide heating functions as part of a combination system shall satisfy all stated requirements for the appropriate water-heating category. Solar water heaters shall meet the criteria of Section R403.5.6.2.1.

☐ **R403.5.6.2.1 Solar water-heating systems.** Solar systems for domestic hot water production are rated by the annual solar energy factor of the system. The solar energy factor of a system shall be determined from the Florida Solar Energy Center Directory of Certified Solar Systems. Solar collectors shall be tested in accordance with ISO Standard 9806, Test Methods for Solar Collectors, and SRCC Standard TM-1, Solar Domestic Hot Water System and Component Test Protocol. Collectors in installed solar water-heating systems should meet the following criteria:

1. Be installed with a tilt angle between 10 degrees and 40 degrees of the horizontal; and
2. Be installed at an orientation within 45 degrees of true south.

☐ **R403.6 Mechanical ventilation (Mandatory).** The building shall be provided with ventilation that meets the requirements of the Florida Building Code, Residential, or Florida Building Code, Mechanical, as applicable, or with other approved means of ventilation including: Natural, Infiltration or Mechanical means. Outdoor air intakes and exhausts shall have automatic or gravity dampers that close when the ventilation system is not operating.

☐ **R403.6.1 Whole-house mechanical ventilation system fan efficacy.** When installed to function as a whole-house mechanical ventilation system, fans shall meet the efficacy requirements of Table R403.6.1.

Exception: Where an air handler that is integral to tested and listed HVAC equipment is used to provide whole-house mechanical ventilation, the air handler shall be powered by an electronically commutated motor.

☐ **R403.6.2 Ventilation Air.** Residential buildings designed to be operated at a positive indoor pressure or for mechanical ventilation shall meet the following criteria:

1. The design air change per hour minimums for residential buildings in ASHRAE 62.2, Ventilation for Acceptable Indoor Air Quality, shall be the maximum rates allowed for residential applications.

2. No ventilation or air-conditioning system make-up air shall be provided to conditioned space from attics, crawlspaces, attached enclosed garages or outdoor spaces adjacent to swimming pools or spas.

3. If ventilation air is drawn from enclosed space(s), then the walls of the space(s) from which air is drawn shall be insulated to a minimum of R-11 and the ceiling shall be insulated to a minimum of R-19, space permitting, or R-10 otherwise.

R403.7 Heating and cooling equipment.

☐ **R403.7.1 Equipment sizing (Mandatory).** Heating and cooling equipment shall be sized in accordance with ACCA Manual S based on the equipment loads calculated in accordance with ACCA Manual J or other approved heating and cooling calculation methodologies, based on building loads for the directional orientation of the building. The manufacturer and model number of the outdoor and indoor units (if split system) shall be submitted along with the sensible and total cooling capacities at the design conditions described in Section R302.1. This Code does not allow designer safety factors, provisions for future expansion or other factors that affect equipment sizing. System sizing calculations shall not include loads created by local intermittent mechanical ventilation such as standard kitchen and bathroom exhaust systems. New or replacement heating and cooling equipment shall have an efficiency rating equal to or greater than the minimum required by federal law for the geographic location where the equipment is installed.

TABLE R403.6.1
WHOLE-HOUSE MECHANICAL VENTILATION SYSTEM FAN EFFICACY

FAN LOCATION	AIRFLOW RATE MINIMUM (CFM)	MINIMUM EFFICACY[a] (CFM/WATT)	AIRFLOW RATE MAXIMUM (CFM)
HRV or ERV	Any	1.2 cfm/watt	Any
Range hoods	Any	2.8 cfm/watt	Any
In-line fan	Any	2.8 cfm/watt	Any
Bathroom, utility room	10	1.4 cfm/watt	<90
Bathroom, utility room	90	2.8 cfm/watt	Any

For SI: 1 cfm = 28.3 L/min.

a. When tested in accordance with HVI Standard 916

☐ **R403.7.1.1 Cooling equipment capacity.** Cooling only equipment shall be selected so that its total capacity is not less than the calculated total load but not more than 1.15 times greater than the total load calculated according to the procedure selected in Section R403.7, or the closest available size provided by the manufacturer's product lines. The corresponding latent capacity of the equipment shall not be less than the calculated latent load.
The published value for AHRI total capacity is a nominal, rating-test value and shall not be used for equipment sizing. Manufacturer's expanded performance data shall be used to select cooling-only equipment. This selection shall be based on the outdoor design dry-bulb temperature for the load calculation (or entering water temperature for water-source equipment), the blower CFM provided by the expanded performance data, the design value for entering wet-bulb temperature and the design value for entering dry-bulb temperature.

Design values for entering wet-bulb and dry-bulb temperatures shall be for the indoor dry bulb and relative humidity used for the load calculation and shall be adjusted for return side gains if the return duct(s) is installed in an unconditioned space.

Exceptions:

1. Attached single- and multiple-family residential equipment sizing may be selected so that its cooling capacity is less than the calculated total sensible load but not less than 80 percent of that load.
2. When signed and sealed by a Florida-registered engineer, in attached single- and multiple-family units, the capacity of equipment may be sized in accordance with good design practice.

R403.7.1.2 Heating equipment capacity.

☐ **R403.7.1.2.1 Heat pumps.** Heat pump sizing shall be based on the cooling requirements as calculated according to Section R403.7.1.1, and the heat pump total cooling capacity shall not be more than 1.15 times greater than the design cooling load even if the design heating load is 1.15 times greater than the design cooling load.

☐ **R403.7.1.2.2 Electric resistance furnaces.** Electric resistance furnaces shall be sized within 4 kW of the design requirements calculated according to the procedure selected in Section R403.7.1.

☐ **R403.7.1.2.3 Fossil fuel heating equipment.** The capacity of fossil fuel heating equipment with natural draft atmospheric burners shall not be less than the design load calculated in accordance with Section R403.7.1.

☐ **R403.7.1.3 Extra capacity required for special occasions.** Residences requiring excess cooling or heating equipment capacity on an intermittent basis, such as anticipated additional loads caused by major entertainment events, shall have equipment sized or controlled to prevent continuous space cooling or heating within that space by one or more of the following options:

1. A separate cooling or heating system is utilized to provide cooling or heating to the major entertainment areas.
2. A variable capacity system sized for optimum performance during base load periods is utilized.

☐ **R403.8 Systems serving multiple dwelling units (Mandatory).** Systems serving multiple dwelling units shall comply with Sections C403 and C404 of the Florida Building Code, Energy Conservation—Commercial Provisions in lieu of Section R403.

☐ **R403.9 Snow melt and ice system controls (Mandatory).** Snow- and ice-melting systems, supplied through energy service to the building, shall include automatic controls capable of shutting off the system when the pavement temperature is above 50°F (10°C), and no precipitation is falling and an automatic or manual control that will allow shutoff when the outdoor temperature is above 40°F (4.8°C).

☐ **403.10 Pools and permanent spa energy consumption (Mandatory).** The energy consumption of pools and permanent spas shall be in accordance with Sections R403.10.1 through R403.10.5.

☐ **R403.10.1 Heaters.** The electric power to heaters shall be controlled by a readily accessible on-off switch that is an integral part of the heater mounted on the exterior of the heater, or external to and within 3 feet (914 mm) of the heater. Operation of such switch shall not change the setting of the heater thermostat. Such switches shall be in addition to a circuit breaker for the power to the heater.
Gas-fired heaters shall not be equipped with continuously burning ignition pilots.

MANDATORY REQUIREMENTS (Continued)

☐ **R403.10.2 Time switches.** Time switches or other control methods that can automatically turn off and on according to a preset schedule shall be installed for heaters and pump motors. Heaters and pump motors that have built-in time switches shall be in compliance with this section.

Exceptions:
1. Where public health standards require 24-hour pump operation.
2. Pumps that operate solar- and waste-heat-recovery pool heating systems
3. Where pumps are powered exclusively from on-site renewable generation.

☐ **R403.10.3 Covers.** Outdoor heated swimming pools and outdoor permanent spas shall be equipped with a vapor-retardant cover on or at the water surface or a liquid cover or other means proven to reduce heat loss.

Exception: Where more than 70 percent of the energy for heating, computed over an operation season, is from site-recovered energy, such as from a heat pump or solar energy source, covers or other vapor-retardant means shall not be required

☐ **R403.10.4 Gas- and oil-fired pool and spa heaters.** All gas- and oil-fired pool and spa heaters shall have a minimum thermal efficiency of 82 percent for heaters manufactured on or after April 16, 2013, when tested in accordance with ANSI Z 21.56. Pool heaters fired by natural or LP gas shall not have continuously burning pilot lights.

☐ **R403.10.5 Heat pump pool heaters.** Heat pump pool heaters shall have a minimum COP of 4.0 when tested in accordance with AHRI 1160, Table 2, Standard Rating Conditions-Low Air Temperature. A test report from an independent laboratory is required to verify procedure compliance. Geothermal swimming pool heat pumps are not required to meet this standard.

☐ **R403.11 Portable spas (Mandatory).** The energy consumption of electric-powered portable spas shall be controlled by the requirements of APSP-14

☐ **R403.13 Dehumidifiers (Mandatory).** If installed, a dehumidifier shall conform to the following requirements:

1. The minimum rated efficiency of the dehumidifier shall be greater than 1.7 liters/ kWh if the total dehumidifier capacity for the house is less than 75 pints/day and greater than 2.38 liters/kWh if the total dehumidifier capacity for the house is greater than or equal to 75 pints/day.
2. The dehumidifier shall be controlled by a sensor that is installed in a location where it is exposed to mixed house air.
3. Any dehumidifier unit located in unconditioned space that treats air from conditioned space shall be insulated to a minimum of R-2.
4. Condensate disposal shall be in accordance with Section M1411.3.1 of the Florida Building Code, Residential.

☐ **R403.13.1 Ducted dehumidifiers.** Ducted dehumidifiers shall, in addition to conforming to the requirements of Section R403.13, conform to the following requirements:

1. If a ducted dehumidifier is configured with return and supply ducts both connected into the supply side of the cooling system, a backdraft damper shall be installed in the supply air duct between the dehumidifier inlet and outlet duct.
2. If a ducted dehumidifier is configured with only its supply duct connected into the supply side of the central heating and cooling system, a backdraft damper shall be installed in the dehumidifier supply duct between the dehumidifier and central supply duct.
3. A ducted dehumidifier shall not be ducted to or from a central ducted cooling system on the return duct side upstream from the central cooling evaporator coil.
4. Ductwork associated with a dehumidifier located in unconditioned space shall be insulated to a minimum of R-6.

SECTION R404
ELECTRICAL POWER AND LIGHTING SYSTEMS

☐ **R404.1 Lighting equipment (Mandatory).** Not less than 90 percent of the lamps in permanently installed luminaires shall have an efficacy of at least 45 lumens-per-watt or shall utilize lamps with an efficacy of not less than 65 lumens-per-watt.

R404.1.1 Lighting equipment (Mandatory). uel gas lighting systems shall not have continuously burning pilot lights.

2020 - AIR BARRIER AND INSULATION INSPECTION COMPONENT CRITERIA
TABLE 402.4.1.1
AIR BARRIER AND INSULATION INSPECTION COMPONENT CRITERIA[a]

Project Name:	200701 Magnolia 2BD	Builder Name:	
Street:	7240 & 7338 Massachusetts ave	Permit Office:	
City, State, Zip:	Newport RIchey, FL, 34653	Permit Number:	
Owner:		Jurisdiction:	
Design Location:	FL, CLEAR_ST_PETERSBURG	County:	Pasco(Florida Climate Zone 2)

COMPONENT	AIR BARRIER CRITERIA	INSULATION INSTALLATION CRITERIA	CHECK
General requirements	A continuous air barrier shall be installed in the building envelope. The exterior thermal envelope contains a continuous air barrier. Breaks or joints in the air barrier shall be sealed.	Air-permeable insulation shall not be used as a sealing material.	
Ceiling/attic	The air barrier in any dropped ceiling/soffit shall be aligned with the insulation and any gaps in the air barrier shall be sealed. Access openings, drop down stairs or knee wall doors to unconditioned attic spaces shall be sealed.	The insulation in any dropped ceiling/soffit shall be aligned with the air barrier.	
Walls	The junction of the foundation and sill plate shall be sealed. The junction of the top plate and the top of exterior walls shall be sealed. Knee walls shall be sealed.	Cavities within corners and headers of frame walls shall be insulated by completely filling the cavity with a material having a thermal resistance of R-3 per inch minimum Exterior thermal envelope insulation for framed walls shall be installed in substantial contact and continuous alignment with the air barrier.	
Windows, skylights and doors	The space between window/door jambs and framing, and skylights and framing shall be sealed.		
Rim joists	Rim joists shall include the air barrier.	Rim joists shall be insulated.	
Floors (including above-garage and cantilevered floors)	The air barrier shall be installed at any exposed edge of insulation.	Floor framing cavity insulation shall be installed to maintain permanent contact with the underside of subfloor decking, or floor framing cavity insulation shall be permitted to be in contact with the top side of sheathing, or continuous insulation installed on the underside of floor framing and extends from the bottom to the top of all perimeter floor framing members.	
Crawl space walls	Exposed earth in unvented crawl spaces shall be covered with a Class I vapor retarder with overlapping joints taped.	Where provided instead of floor insulation, insulation shall be permanently attached to the crawlspace walls.	
Shafts, penetrations	Duct shafts, utility penetrations, and flue shafts opening to exterior or unconditioned space shall be sealed.		
Narrow cavities		Batts in narrow cavities shall be cut to fit, or narrow cavities shall be filled by insulation that on installation readily conforms to the available cavity spaces.	
Garage separation	Air sealing shall be provided between the garage and conditioned spaces.		
Recessed lighting	Recessed light fixtures installed in the building thermal envelope shall be sealed to the finished surface.	Recessed light fixtures installed in the building thermal envelope shall be air tight and IC rated.	
Plumbing and wiring		Batt insulation shall be cut neatly to fit around wiring and plumbing in exterior walls, or insulation that on installation readily conforms to available space shall extend behind piping and wiring.	
Shower/tub on exterior wall	The air barrier installed at exterior walls adjacent to showers and tubs shall separate them from the showers and tubs.	Exterior walls adjacent to showers and tubs shall be insulated.	
Electrical/phone box on exterior walls	The air barrier shall be installed behind electrical or communication boxes or air-sealed boxes shall be installed.		
HVAC register boots	HVAC supply and return register boots that penetrate building thermal envelope shall be sealed to the sub-floor, wall covering or ceiling penetrated by the boot.		
Concealed sprinklers	When required to be sealed, concealed fire sprinklers shall only be sealed in a manner that is recommended by the manufacturer. Caulking or other adhesive sealants shall not be used to fill voids voids between fire sprinkler cover plates and walls or ceilings.		

a. In addition, inspection of log walls shall be in accordance with the provisions of ICC-400.

Envelope Leakage Test Report (Blower Door Test)
Residential Prescriptive, Performance or ERI Method Compliance
2020 Florida Building Code, Energy Conservation, 7th Edition

Jurisdiction:	Permit #:

Job Information

Builder: Community: Lot: NA

Address: 7240 & 7338 Massachusetts ave

City: Newport RIchey State: FL Zip: 34653

Air Leakage Test Results *Passing results must meet either the Performance, Prescriptive, or ERI Method*

○ **PRESCRIPTIVE METHOD-**The building or dwelling unit shall be tested and verified as having an air leakage rate of not exceeding 7 air changes per hour at a pressure of 0.2 inch w.g. (50 Pascals) in Climate Zones 1 and 2.

● **PERFORMANCE or ERI METHOD-**The building or dwelling unit shall be tested and verified as having an air leakage rate of not exceeding the selected ACH(50) value, as shown on Form R405-2020 (Performance) or R406-2020 (ERI), section labeled as infiltration, sub-section ACH50.

ACH(50) specified on Form R405-2020-Energy Calc (Performance) or R406-2020 (ERI): 7.000

_____ x 60 ÷ 8570 = _____
CFM(50) Building Volume ACH(50)

☐ **PASS**

☐ When ACH(50) is less than 3, Mechanical Ventilation installation must be verified by building department.

Method for calculating building volume:

○ Retrieved from architectural plans

● Code software calculated

○ Field measured and calculated

R402.4.1.2 Testing. Testing shall be conducted in accordance with ANSI/RESNET/ICC 380 and reported at a pressure of 0.2 inch w.g. (50 Pascals). Testing shall be conducted by either individuals as defined in Section 553.993(5) or (7), *Florida Statues.*or individuals licensed as set forth in Section 489.105(3)(f), (g), or (i) or an approved third party. A written report of the results of the test shall be signed by the party conducting the test and provided to the*code official.* Testing shall be performed at any time after creation of all penetrations of the *building thermal envelope.*

During testing:
1. Exterior windows and doors, fireplace and stove doors shall be closed, but not sealed, beyond the intended weatherstripping or other infiltration control measures.
2. Dampers including exhaust, intake, makeup air, back draft and flue dampers shall be closed, but not sealed beyond intended infiltration control measures.
3. Interior doors, if installed at the time of the test, shall be open.
4. Exterior doors for continuous ventilation systems and heat recovery ventilators shall be closed and sealed.
5. Heating and cooling systems, if installed at the time of the test, shall be turned off.
6. Supply and return registers, if installed at the time of the test, shall be fully open.

Testing Company

Company Name: _____ Phone: _____

I hereby verify that the above Air Leakage results are in accordance with the 2020 7th Edition Florida Building Code Energy Conservation requirements according to the compliance method selected above.

Signature of Tester: _____ Date of Test: _____

Printed Name of Tester: _____

License/Certification #: _____ Issuing Authority: _____

BID SET 08/05/2022

Duct Leakage Test Report

Residential Prescriptive, Performance or ERI Method Compliance
2020 Florida Building Code, Energy Conservation, 7th Edition

Jurisdiction:	Permit #:

Job Information

Builder: Community: Lot: NA

Address: 7240 & 7338 Massachusetts ave

City: Newport RIchey State: FL Zip: 34653

Duct Leakage Test Results

System 1	_____	cfm25
System 2	_____	cfm25
System 3	_____	cfm25
Sum of others	_____	cfm25
Total of all	_____	cfm25

_____ ÷ 857 = _____Qn

Total of all systems — Total Conditioned Square Footage

☐ **PASS** ☐ **FAIL**

○ **Prescriptive Method** cfm25 (Total)

To qualify as "substantially leak free" Qn Total must be less than or equal to 0.04 if air handler unit is installed. If air handler unit is not installed, Qn Total must be less than or equal to 0.03. This testing method meets the requirements in accordance with Section R403.3.3.

Is the air handler unit installed during testing? ☐ YES (= .04 Qn) ☐ NO (= .03 Qn)

● **Performance/ERI Method** cfm25 (Out or Total)

To qualify using this method, Qn must not be greater than the proposed duct leakage Qn specified on Form R405-2020 or R406-2020.

Leakage Type selected on Form R405-2020 (EnergyCalc) or R406-2020	*Qn specified on Form R405-2020 (EnergyCalc) or R406-2020*
Proposed Leak Free	0.03

Duct tightness shall be verified by testing in accordance with ANSI/RESNET/ICC380 by either individuals as defined in Section 553.993(5) or (7), Florida Statutes, or individuals licensed as set forth in Section 489.105(3)(f), (g) or (i), Florida Statutes.

Testing Company

Company Name: _____ Phone: _____

I hereby verify that the above duct leakage testing results are in accordance with the Florida Building Code requirements with the selected compliance path as stated above, either the Prescriptive Method or Performance Method.

Signature of Tester: _____ Date of Test: _____

Printed Name of Tester: _____

License/Certification #: _____ Issuing Authority: _____

Air Handler #2 - AHU-2 (2 BD) - Total Load Summary

Air Handler Description:	AHU-2 (2 BD) Constant Volume - Proportion
Supply Air Fan:	Draw-Thru with program estimated horsepower of 0.09 HP
Fan Input:	90% motor and fan efficiency with 0.5 in. water across the fan
Sensible Heat Ratio:	0.96

--- This system occurs 1 time(s) in the building. ---

Air System Peak Time:	5pm in August.
Outdoor Conditions:	Clg: 91° DB, 77° WB, 120.09 grains, Htg: 42° DB
Indoor Conditions:	Clg: 75° DB, 50% RH, Htg: 70° DB

Summer: Ventilation controls outside air, ----- Winter: Ventilation controls outside air.

Room Space sensible loss:	7,958	Btuh				
Infiltration sensible loss:	0	Btuh	0	CFM		
Outside Air sensible loss:	1,807	Btuh	60	CFM		
Supply Duct sensible loss:	0	Btuh				
Return Duct sensible loss:	0	Btuh				
Return Plenum sensible loss:	0	Btuh				
Total System sensible loss:					9,765	Btuh
Heating Supply Air: 7,958 / (1.000 X 1.08 X 25) =			295	CFM		
Winter Vent Outside Air (20.4% of supply) =			60	CFM		
Room space sensible gain:	23,307	Btuh				
Infiltration sensible gain:	0	Btuh				
Draw-thru fan sensible gain:	237	Btuh				
Supply duct sensible gain:	0	Btuh				
Reserve sensible gain:	0	Btuh				
Total sensible gain on supply side of coil:					23,544	Btuh
Cooling Supply Air: 23,544 / (1.000 X 1.1 X 20) =			1,071	CFM		
Summer Vent Outside Air (5.6% of supply) =			60	CFM		
Return duct sensible gain:	0	Btuh				
Return plenum sensible gain:	0	Btuh				
Outside air sensible gain:	1,056	Btuh	60	CFM		
Blow-thru fan sensible gain:	0	Btuh				
Total sensible gain on return side of coil:					1,056	Btuh
Total sensible gain on air handling system:					24,600	Btuh
Room space latent gain:	880	Btuh				
Infiltration latent gain:	0	Btuh				
Outside air latent gain:	2,159	Btuh				
Total latent gain on air handling system:					3,039	Btuh
Total system sensible and latent gain:					27,639	Btuh

Check Figures

Total Air Handler Supply Air (based on a 20° TD):	1,071	CFM
Total Air Handler Vent. Air (5.60% of Supply):	60	CFM
Total Conditioned Air Space:	860	Sq.ft
Supply Air Per Unit Area:	1.2448	CFM/Sq.ft
Area Per Cooling Capacity:	373.4	Sq.ft/Ton
Cooling Capacity Per Area:	0.0027	Tons/Sq.ft
Heating Capacity Per Area:	11.35	Btuh/Sq.ft
Total Heating Required With Outside Air:	9,765	Btuh
Total Cooling Required With Outside Air:	2.30	Tons

BID SET 08/05/2022

RESIDENTIAL ENERGY CONSERVATION CODE DOCUMENTATION CHECKLIST

Florida Department of Business and Professional Regulation
Simulated Performance Alternative (Performance) Method

Applications for compliance with the 2020 Florida Building Code, Energy Conservation via the Residential Simulated Performance Alternative shall include:

- ☑ *This checklist*
- ☑ *Form R405-2020 report*
- ☑ *Input summary checklist that can be used for field verification (usually four pages/may be greater)*
- ☑ *Energy Performance Level (EPL) Display Card (one page)*
- ☑ *HVAC system sizing and selection based on ACCA Manual S or per exceptions provided in Section R403.7*
- ☑ *Mandatory Requirements (five pages)*

Required prior to CO:

- ☑ *Air Barrier and Insulation Inspection Component Criteria checklist (Table R402.4.1.1 - one page)*
- ☑ *A completed 2020 Envelope Leakage Test Report (usually one page); exception in R402.4 allows dwelling units of R-2 Occupancies and multiple attached single family dwellings to comply with Section C402.5*
- ☑ *If Form R405 duct leakage type indicates anything other than "default leakage", then a completed 2020 Duct Leakage Test Report - Performance Method (usually one page)*

.

☑ HVAC Load Calculations (Manual J's)

THIS ITEM HAS BEEN ELECTRONICALLY SIGNED AND SEALED BY MICHAEL A. COSTELLO, PE USING A DIGITAL SIGNATURE AND DATE. PRINTED COPIES OF THIS DOCUMENT ARE NOT CONSIDERED SIGNED AND SEALED AND THE SIGNATURE MUST BE VERIFIED ON ANY ELECTRONIC COPIES.

BID SET 08/05/2022

FORM R405-2020

FLORIDA ENERGY EFFICIENCY CODE FOR BUILDING CONSTRUCTION

Florida Department of Business and Professional Regulation - Residential Performance Method

Project Name:	200701 Magnolia 3BD	Builder Name:	
Street:	7240 & 7338 Massachusetts ave	Permit Office:	
City, State, Zip:	Newport RIchey, FL, 34653	Permit Number:	
Owner:		Jurisdiction:	
Design Location:	FL, CLEAR_ST_PETERSBURG	County:	Pasco(Florida Climate Zone 2)

1. New construction or existing — New (From Plans)
2. Single family or multiple family — Attached
3. Number of units, if multiple family — 1
4. Number of Bedrooms — 3
5. Is this a worst case? — Yes
6. Conditioned floor area above grade (ft²) — 968
   Conditioned floor area below grade (ft²) — 0
7. Windows(105.7 sqft.)

	Description	Area
a. U-Factor:	Sgl, U=0.50	105.67 ft²
SHGC:	SHGC=0.50	
b. U-Factor:	N/A	ft²
SHGC:		
c. U-Factor:	N/A	ft²
SHGC:		

Area Weighted Average Overhang Depth: 0.000 ft
Area Weighted Average SHGC: 0.500

8. Skylights

	Description	Area
U-Factor:(AVG)	N/A	N/A ft²
SHGC(AVG):	N/A	

9. Floor Types

	Insulation	Area
a. N/A	R=	ft²
b. N/A	R=	ft²
c. N/A	R=	ft²

10. Wall Types(540.0 sqft.)

	Insulation	Area
a. Concrete Block - Ext Insul, Exterior	R=5.0	540.00 ft²
b. N/A	R=	ft²
c. N/A	R=	ft²
d. N/A	R=	ft²

11. Ceiling Types(968.0 sqft.)

	Insulation	Area
a. Roof Deck (Unvented)	R=30.0	968.00 ft²
b. N/A	R=	ft²
c. N/A	R=	ft²

12. Ducts, location & insulation level

	R	ft²
a. Sup: 1st Floor, Ret: 1st Floor, AH: 1st Floor	6	134.2
b.		
c.		

13. Cooling Systems

	kBtu/hr	Efficiency
a. Central Unit	27.2	SEER:16.00

14. Heating Systems

	kBtu/hr	Efficiency
a. Electric Strip Heat	17.0	COP:1.00

15. Hot Water Systems
    a. Electric — Cap: 46 gallons, EF: 0.920
    b. Conservation features — None
16. Credits — Pstat

Glass/Floor Area: 0.109

Total Proposed Modified Loads: 36.78
Total Baseline Loads: 37.11

PASS

I hereby certify that the plans and specifications covered by this calculation are in compliance with the Florida Energy Code.

PREPARED BY: Michael A. Costello, PE

DATE: 07/06/2022

I hereby certify that this building, as designed, is in compliance with the Florida Energy Code.

OWNER/AGENT: _____

DATE: _____

Review of the plans and specifications covered by this calculation indicates compliance with the Florida Energy Code. Before construction is completed this building will be inspected for compliance with Section 553.908 Florida Statutes.

GREAT SEAL OF THE STATE OF FLORIDA — IN GOD WE TRUST

BUILDING OFFICIAL: _____

DATE: _____

- Compliance requires certification by the air handler unit manufacturer that the air handler enclosure qualifies as certified factory-sealed in accordance with R403.3.2.1.

- Compliance with a proposed duct leakage Qn requires a PERFORMANCE Duct Leakage Test Report confirming duct leakage to outdoors, tested in accordance with ANSI/RESNET/ICC 380, is not greater than 0.030 Qn for whole house.

- Compliance requires an Air Barrier and Insulation Inspection Checklist in accordance with R402.4.1.1 and this project requires a PERFORMANCE envelope leakage test report with envelope leakage no greater than 7.00 ACH50 (R402.4.1.2).

BID SET 08/05/2022

FORM R405-2020

INPUT SUMMARY CHECKLIST REPORT

PROJECT

Title:	200701 Magnolia 3BD			Address type:	Street Address
Building Type:	User	Bedrooms:	3	Lot #:	---
Owner:		Conditioned Area:	968	Block/SubDivision:	---
		Total Stories:	1	PlatBook:	---
Builder Name:		Worst Case:	Yes	Street:	7240 & 7338 Massachusetts ave
Permit Office:		Rotate Angle:	90	County:	Pasco
Jurisdiction:		Cross Ventilation:		City, State, Zip:	Newport RIchey,
Family Type:	Attached	Whole House Fan:			FL, 34653
New/Existing:	New (From Plans)	Terrain:	Suburban		
Year Construct:	2022	Shielding:	Suburban		
Comment:					

CLIMATE

✓	Design Location	Tmy Site	Design Temp 97.5%	Design Temp 2.5%	Int Design Temp Winter	Int Design Temp Summer	Heating Degree Days	Design Moisture	Daily temp Range
___	FL, CLEAR_ST_PETERSBUR	FL_ST_PETERSBURG_CLEAR	39	91	70	75	733	54	Medium

BLOCKS

✓	Number	Name	Area	Volume
___	1	Block1	968	9680

SPACES

✓	Number	Name	Area	Volume	Kitchen	Occupants	Bedrooms	Finished	Cooled	Heated
___	1	1st Floor	968	9680	Yes	4	3	Yes	Yes	Yes

FLOORS (Total Exposed Area = 0 sq.ft.)

✓	#	Floor Type	Space	Exposed Perim	Perimeter R-Value	Area	U-Factor	Joist R-Value	Tile	Wood	Carpet

ROOF

✓	#	Type	Materials	Roof Area	Gable Area	Roof Color	Rad Barr	Solar Absor.	SA Tested	Emitt	Emitt Tested	Deck Insul.	Pitch (deg)
___	1	Gable or shed	Composition shingles	1049 ft²	202 ft²	Light	N	0.3	No	0.95	No	30	22.62

ATTIC

✓	#	Type	Ventilation	Vent Ratio (1 in)	Area	RBS	IRCC
___	1	No attic	Unvented	0	968 ft²	N	N

CEILING (Total Exposed Area = 968 sq.ft.)

✓	#	Ceiling Type	Space	R-Value	Ins. Type	Area	U-Factor	Framing Frac.	Truss Type
___	1	Under Attic(Unvented)	1st Floor	30.0	Blown	968.0ft²	0.020	0.11	Wood

BID SET 08/05/2022

FORM R405-2020

INPUT SUMMARY CHECKLIST REPORT

WALLS (Total Exposed Area = 540 sq.ft.)

Note: First wall orientation below is as entered. Actual orientation is modified by the rotate angle (90 degrees) as shown in the "Project" section on page 1.

√	#	Ornt	Adjacent To	Wall Type	Space	Cavity R-Value	Width Ft	Width In	Height Ft	Height In	Area sq.ft.	U-Factor	Sheath R-Value	Frm. Frac.	Solar Absor.	Below Grade
___	1	N=>E	Exterior	Conc. Blk - Ext Ins	1st Floor	5.0	23.0	0	10.0	0	230.0	0.117	0	0	0.60	0 %
___	2	S=>W	Exterior	Conc. Blk - Ext Ins	1st Floor	5.0	23.0	0	10.0	0	230.0	0.117	0	0	0.60	0 %
___	3	E=>S	Exterior	Conc. Blk - Ext Ins	1st Floor	5.0	8.0	0	10.0	0	80.0	0.117	0	0	0.60	0 %

DOORS (Total Exposed Area = 0 sq.ft.)

√	#	Ornt	Adjacent To	Door Type	Space	Storms	U-Value	Width Ft	Width In	Height Ft	Height In	Area
___	1	N=>E(Front)		Wood	1st Floor	None	0.20	0.10	0	0.10	0	0.0ft²

WINDOWS (Total Exposed Area = 106 sq.ft.)

√	#	Ornt	Wall ID	Frame	Panes	NFRC	U-Factor	SHGC	Imp	Storm	Total Area (ft²)	Same Units	Width (ft)	Height (ft)	--Overhang-- Depth (ft)	Sep. (ft)	Interior Shade	Screen
___	1	N=>E	1	Metal	Low-E Single	Y	0.50	0.50	N	N	13.3	1	4.00	3.33	0.0	0.0	Drapes/blinds	None
___	2	N=>E	1	Metal	Low-E Single	Y	0.50	0.50	N	N	39.5	1	6.00	6.58	0.0	0.0	Drapes/blinds	None
___	3	S=>W	2	Metal	Low-E Single	Y	0.50	0.50	N	N	13.3	1	4.00	3.33	0.0	0.0	Drapes/blinds	None
___	4	S=>W	2	Metal	Low-E Single	Y	0.50	0.50	N	N	39.5	1	6.00	6.58	0.0	0.0	Drapes/blinds	None

INFILTRATION

√	#	Scope	Method	SLA	CFM50	ELA	EqLA	ACH	ACH50	Space(s)
___	1	Wholehouse	Proposed ACH(50)	0.00044	1129	61.96	116.32	0.1697	7.0	All

MASS

√	#	Mass Type	Area	Thickness	Furniture Fraction	Space
___	1	Default(8 lbs/sq.ft.)	0 ft²	0 ft	0.30	1st Floor

HEATING SYSTEM

√	#	System Type	Subtype	AHRI #	Efficiency	Capacity kBtu/hr	----Geothermal HeatPump---- Entry	Power	Volt	Current	Ducts	Block
___	1	Electric Strip Heat	None		COP: 1.00	17.0		0.00	0.00	0.00	sys#1	1

COOLING SYSTEM

√	#	System Type	Subtype/Speed	AHRI #	Efficiency	Capacity kBtu/hr	Air Flow cfm	SHR	Duct	Block
___	1	Central Unit	Split/Single		SEER:16.0	27.2	1000	0.84	sys#1	1

FORM R405-2020

INPUT SUMMARY CHECKLIST REPORT

HOT WATER SYSTEM

√ #	System Type	Subtype	Location	EF(UEF)	Cap	Use	SetPnt	Fixture Flow	Pipe Ins.	Pipe length
___ 1	Electric	None	1st Floor	0.92 (0.92)	46.00 gal	40 gal	120 deg	Standard	=>R-3	99

	Recirculation System	Recirc Control Type	Loop length	Branch length	Pump power	DWHR	Facilities Connected	Equal Flow	DWHR Eff	Other Credits
___ 1	No		NA	NA	NA	No	NA	NA	NA	None

DUCTS

√ Duct #	---------Supply--------- Location	R-Value	Area	---------Return--------- Location	R-Value	Area	Leakage Type	Air Handler	CFM 25 TOT	CFM 25 OUT	QN	RLF	HVAC # Heat	Cool
___ 1	1st Floor	6.0	134 ft²	1st Floor	6.0	34 ft²	Prop. Leak Free	1st Floor	---	---	0.03	0.50	1	1

MECHANICAL VENTILATION

√ Type	Supply CFM	Exhaust CFM	HRV	Fan	Run Time	Heating System	Cooling System
___ Runtime Vent	45.0	0.0	0.0	0.0 W	0 %	1 - Electric Strip Heat	1 - Central Unit

TEMPERATURES

Programable Thermostat: Y Ceiling Fans: N

	Jan	Feb	Mar	Apr	May	Jun	Jul	Aug	Sep	Oct	Nov	Dec
Cooling	[ ]	[ ]	[ ]	[ ]	[ ]	[X]	[X]	[X]	[X]	[ ]	[ ]	[ ]
Heating	[X]	[X]	[X]	[ ]	[ ]	[ ]	[ ]	[ ]	[ ]	[ ]	[X]	[X]
Venting	[ ]	[ ]	[X]	[X]	[ ]	[ ]	[ ]	[ ]	[ ]	[X]	[X]	[ ]

√ Thermostat Schedule: HERS 2006 Reference

Schedule Type		Hours 1	2	3	4	5	6	7	8	9	10	11	12
___ Cooling (WD)	AM	78	78	78	78	78	78	78	78	80	80	80	80
	PM	80	80	78	78	78	78	78	78	78	78	78	78
___ Cooling (WEH)	AM	78	78	78	78	78	78	78	78	78	78	78	78
	PM	78	78	78	78	78	78	78	78	78	78	78	78
___ Heating (WD)	AM	66	66	66	66	66	68	68	68	68	68	68	68
	PM	68	68	68	68	68	68	68	68	68	68	66	66
___ Heating (WEH)	AM	66	66	66	66	66	68	68	68	68	68	68	68
	PM	68	68	68	68	68	68	68	68	68	68	66	66

FORM R405-2020

ENERGY PERFORMANCE LEVEL (EPL) DISPLAY CARD

ESTIMATED ENERGY PERFORMANCE INDEX* = 99

The lower the EnergyPerformance Index, the more efficient the home.

7240 & 7338 Massachusetts ave,Newport RIchey,FL,34653

1. New construction or existing		New (From Plans)
2. Single family or multiple family		Attached
3. Number of units, if multiple family		1
4. Number of Bedrooms		3
5. Is this a worst case?		Yes
6. Conditioned floor area above grade (ft²)		968
Conditioned floor area below grade (ft²)		0
7. Windows**	Description	Area
a. U-Factor:	Sgl, U=0.50	105.67 ft²
SHGC:	SHGC=0.50	
b. U-Factor:	N/A	ft²
SHGC:		
c. U-Factor:	N/A	ft²
SHGC:		
Area Weighted Average Overhang Depth:		0.000 ft
Area Weighted Average SHGC:		0.500
8. Skylights	Description	Area
U-Factor:(AVG)	N/A	N/A ft²
SHGC(AVG):	N/A	

9. Floor Types	Insulation	Area
a. N/A	R=	ft²
b. N/A	R=	ft²
c. N/A	R=	ft²

10. Wall Types(540.0 sqft.)	Insulation	Area
a. Concrete Block - Ext Insul, Exterior	R=5.0	540.00 ft²
b. N/A	R=	ft²
c. N/A	R=	ft²
d. N/A	R=	ft²

11. Ceiling Types(968.0 sqft.)	Insulation	Area
a. Roof Deck (Unvented)	R=30.0	968.00 ft²
b. N/A	R=	ft²
c. N/A	R=	ft²

12. Ducts, location & insulation level	R	ft²
a. Sup: 1st Floor, Ret: 1st Floor, AH: 1st Floor	6	134.2
b.		
c.		

13. Cooling Systems	kBtu/hr	Efficiency
a. Central Unit	27.2	SEER:16.00

14. Heating Systems	kBtu/hr	Efficiency
a. Electric Strip Heat	17.0	COP:1.00

15. Hot Water Systems	
a. Electric	Cap: 46 gallons EF: 0.920
b. Conservation features	None
16. Credits	Pstat

I certify that this home has complied with the Florida Energy Efficiency Code for Building Construction through the above energy saving features which will be installed (or exceeded) in this home before final inspection. Otherwise, a new EPL Display Card will be completed based on installed Code compliant features.

Builder Signature: _____ Date: _____

Address of New Home: 7240 & 7338 Massachusetts ave City/FL Zip: Newport RIchey,FL,34653

*Note: This is not a Building Energy Rating. If your Index is below 70, your home may qualify for energy efficient mortgage (EEM) incentives if you obtain a Florida Energy Rating. For information about the Florida Building Code, Energy Conservation, contact the Florida Building Commission's support staff.

**Label required by Section R303.1.3 of the Florida Building Code, Energy Conservation, if not DEFAULT.

BID SET 08/05/2022

Florida Building Code, Energy Conservation, 7th Edition (2020)
Mandatory Requirements for Residential Performance, Prescriptive and ERI Methods

ADDRESS:	7240 & 7338 Massachusetts ave Newport RIchey, FL 34653	Permit Number:	

MANDATORY REQUIREMENTS - See individual code sections for full details.

SECTION R401 GENERAL

☐ **R401.3 Energy Performance Level (EPL) display card - (Mandatory).** The building official shall require that an energy performance level (EPL) display card be completed and certified by the builder to be accurate and correct before final approval of the building for occupancy. Florida law (Section 553.9085, Florida Statutes) requires the EPL display card to be included as an addendum to each sales contract for both presold and nonpresold residential buildings. The EPL display card contains information indicating the energy performance level and efficiencies of components installed in a dwelling unit. The building official shall verify that the EPL display card completed and signed by the builder accurately reflects the plans and specifications submitted to demonstrate code compliance for the building. A copy of the EPL display card can be found in Appendix RD.

SECTION R402 BUILDING THERMAL ENVELOPE

☐ **R402.4 Air leakage (Mandatory).** The building thermal envelope shall be constructed to limit air leakage in accordance with the requirements of Sections R402.4.1 through R402.4.5.

> **Exception:** Dwelling units of R-2 Occupancies and multiple attached single family dwellings shall be permitted to comply with Section C402.5.

☐ **R402.4.1 Building thermal envelope.** The building thermal envelope shall comply with Sections R402.4.1.1 and R402.4.1.2. The sealing methods between dissimilar materials shall allow for differential expansion and contraction.

☐ **R402.4.1.1 Installation.** The components of the building thermal envelope as listed in Table R402.4.1.1 shall be installed in accordance with the manufacturer's instructions and the criteria listed in Table R402.4.1.1, as applicable to the method of construction. Where required by the code official, an approved third party shall inspect all components and verify compliance.

☐ **R402.4.1.2 Testing.** The building or dwelling unit shall be tested and verified as having an air leakage rate not exceeding seven air changes per hour in Climate Zones 1 and 2, and three air changes per hour in Climate Zones 3 through 8. Testing shall be conducted in accordance with ANSI/RESNET/ICC 380 and reported at a pressure of 0.2 inch w.g. (50 pascals). Testing shall be conducted by either individuals as defined in Section 553.993(5) or (7), Florida Statutes, or individuals licensed as set forth in Section 489.105(3)(f), (g) or (i) or an approved third party. A written report of the results of the test shall be signed by the party conducting the test and provided to the code official. Testing shall be performed at any time after creation of all penetrations of the building thermal envelope.

> **Exception:** Testing is not required for additions, alterations, renovations, or repairs, of the building thermal envelope of existing buildings in which the new construction is less than 85 percent of the building thermal envelope.

During testing:
1. Exterior windows and doors, fireplace and stove doors shall be closed, but not sealed, beyond the intended weatherstripping or other infiltration control measures.
2. Dampers including exhaust, intake, makeup air, backdraft and flue dampers shall be closed, but not sealed beyond intended infiltration control measures.
3. Interior doors, if installed at the time of the test, shall be open.
4. Exterior doors for continuous ventilation systems and heat recovery ventilators shall be closed and sealed.
5. Heating and cooling systems, if installed at the time of the test, shall be turned off.
6. Supply and return registers, if installed at the time of the test, shall be fully open.

☐ **R402.4.2 Fireplaces.** New wood-burning fireplaces shall have tight-fitting flue dampers or doors, and outdoor combustion air. Where using tight-fitting doors on factory-built fireplaces listed and labeled in accordance with UL 127, the doors shall be tested and listed for the fireplace. Where using tight-fitting doors on masonry fireplaces, the doors shall be listed and labeled in accordance with UL 907.

☐ **R402.4.3 Fenestration air leakage.** Windows, skylights and sliding glass doors shall have an air infiltration rate of no more than 0.3 cfm per square foot (1.5 L/s/m2), and swinging doors no more than 0.5 cfm per square foot (2.6 L/s/m2), when tested according to NFRC 400 or AAMA/ WDMA/CSA 101/I.S.2/A440 by an accredited, independent laboratory and listed and labeled by the manufacturer.

> **Exception:** Site-built windows, skylights and doors.

☐ **R402.4.4 Rooms containing fuel - burning appliances.** In Climate Zones 3 through 8, where open combustion air ducts provide combustion air to open combustion fuel burning appliances, the appliances and combustion air opening shall be located outside the building thermal envelope or enclosed in a room, isolated from inside the thermal envelope. Such rooms shall be sealed and insulated in accordance with the envelope requirements of Table R402.1.2, where the walls, floors and ceilings shall meet not less than the basement wall R-value requirement. The door into the room shall be fully gasketed and any water lines and ducts in the room insulated in accordance with Section R403. The combustion air duct shall be insulated where it passes through conditioned space to a minimum of R-8.

> **Exceptions:**
> 1. Direct vent appliances with both intake and exhaust pipes installed continuous to the outside.
> 2. Fireplaces and stoves complying with Section R402.4.2 and Section R1006 of the Florida Building Code, Residential.

MANDATORY REQUIREMENTS (Continued)

☐ **R402.4.5 Recessed lighting.** Recessed luminaires installed in the building thermal envelope shall be sealed to limit air leakage between conditioned and unconditioned spaces. All recessed luminaires shall be IC-rated and labeled as having an air leakage rate not more than 2.0 cfm (0.944 L/s) when tested in accordance with ASTM E283 at a 1.57 psf (75 Pa) pressure differential. All recessed luminaires shall be sealed with a gasket or caulk between the housing and the interior wall or ceiling covering.

SECTION R403 SYSTEMS

R403.1 Controls

☐ **R403.1.1 Thermostat provision (Mandatory).** At least one thermostat shall be provided for each separate heating and cooling system

☐ **R403.1.3 Heat pump supplementary heat (Mandatory).** Heat pumps having supplementary electric-resistance heat shall have controls that, except during defrost, prevent supplemental heat operation when the heat pump compressor can meet the heating load.

☐ **R403.3.2 Sealing (Mandatory).** All ducts, air handlers, filter boxes and building cavities that form the primary air containment passageways for air distribution systems shall be considered ducts or plenum chambers, shall be constructed and sealed in accordance with Section C403.2.9.2 of the Commercial Provisions of this code and shall be shown to meet duct tightness criteria below.

Duct tightness shall be verified by testing in accordance with ANSI/RESNET/ICC 380 by either individuals as defined in Section 553.993(5) or (7), Florida Statutes, or individuals licensed as set forth in Section 489.105(3)(f), (g) or (i), Florida Statutes, to be "substantially leak free" in accordance with Section R403.3.3.

☐ **R403.3.2.1 Sealed air handler.** Air handlers shall have a manufacturer's designation for an air leakage of no more than 2 percent of the design airflow rate when tested in accordance with ASHRAE 193.

☐ **R403.3.3 Duct testing (Mandatory).** Ducts shall be pressure tested to determine air leakage by one of the following methods:

1. Rough-in test: Total leakage shall be measured with a pressure differential of 0.1 inch w.g. (25 Pa) across the system, including the manufacturer's air handler enclosure if installed at the time of the test. All registers shall be taped or otherwise sealed during the test.
2 Postconstruction test: Total leakage shall be measured with a pressure differential of 0.1 inch w.g. (25 Pa) across the entire system, including the manufacturer's air handler enclosure. Registers shall be taped or otherwise sealed during the test.

Exceptions;

1. A duct air leakage test shall not be required where the ducts and air handlers are located entirely within the building thermal envelope.
2. Duct testing is not mandatory for buildings complying by Section 405 of this code. Duct leakage testing is required for Section R405 compliance where credit is taken for leakage, and a duct air leakage Qn to the outside of less than 0.080 (where Qn = duct leakage to the outside in cfm per 100 square feet of conditioned floor area tested at 25 Pascals) is indicated in the compliance report for the proposed design.

A written report of the results of the test shall be signed by the party conducting the test and provided to the code official

☐ **R403.3.5 Building cavities (Mandatory).** Building framing cavities shall not be used as ducts or plenums

☐ **R403.4 Mechanical system piping insulation (Mandatory).** Mechanical system piping capable of carrying fluids above 105°F (41°C) or below 55°F (13°C) shall be insulated to a minimum of R-3.

☐ **R403.4.1 Protection of piping insulation.** Piping insulation exposed to weather shall be protected from damage, including that caused by sunlight, moisture, equipment maintenance and wind, and shall provide shielding from solar radiation that can cause degradation of the material. Adhesive tape shall not be permitted.

☐ **R403.5.1 Heated water circulation and temperature maintenance systems (Mandatory).** If heated water circulation systems are installed, they shall be in accordance with Section R403.5.1.1. Heat trace temperature maintenance systems shall be in accordance with Section R403.5.1.2. Automatic controls, temperature sensors and pumps shall be accessible. Manual controls shall be readily accessible.

☐ **R403.5.1.1 Circulation systems.** Heated water circulation systems shall be provided with a circulation pump. The system return pipe shall be a dedicated return pipe or a cold water supply pipe. Gravity and thermosiphon circulation systems shall be prohibited. Controls for circulating hot water system pumps shall start the pump based on the identification of a demand for hot water within the occupancy. The controls shall automatically turn off the pump when the water in the circulation loop is at the desired temperature and when there is no demand for hot water.

☐ **R403.5.1.2 Heat trace systems.** Electric heat trace systems shall comply with IEEE 515.1 or UL 515. Controls for such systems shall automatically adjust the energy input to the heat tracing to maintain the desired water temperature in the piping in accordance with the times when heated water is used in the occupancy.

MANDATORY REQUIREMENTS (Continued)

☐ **R403.5.5 Heat traps (Mandatory).** Storage water heaters not equipped with integral heat traps and having vertical pipe risers shall have heat traps installed on both the inlets and outlets. External heat traps shall consist of either a commercially available heat trap or a downward and upward bend of at least 3 ½ inches (89 mm) in the hot water distribution line and cold water line located as close as possible to the storage tank.

R403.5.6 Water heater efficiencies (Mandatory).

☐ **R403.5.6.1.1 Automatic controls.** Service water-heating systems shall be equipped with automatic temperature controls capable of adjustment from the lowest to the highest acceptable temperature settings for the intended use. The minimum temperature setting range shall be from 100°F to 140°F (38°C to 60°C).

☐ **R403.5.6.1.2 Shut down.** A separate switch or a clearly marked circuit breaker shall be provided to permit the power supplied to electric service systems to be turned off. A separate valve shall be provided to permit the energy supplied to the main burner(s) of combustion types of service water-heating systems to be turned off.

☐ **R403.5.6.2 Water-heating equipment.** Water-heating equipment installed in residential units shall meet the minimum efficiencies of Table C404.2 in Chapter 4 of the Florida Building Code, Energy Conservation, Commercial Provisions, for the type of equipment installed. Equipment used to provide heating functions as part of a combination system shall satisfy all stated requirements for the appropriate water-heating category. Solar water heaters shall meet the criteria of Section R403.5.6.2.1.

☐ **R403.5.6.2.1 Solar water-heating systems.** Solar systems for domestic hot water production are rated by the annual solar energy factor of the system. The solar energy factor of a system shall be determined from the Florida Solar Energy Center Directory of Certified Solar Systems. Solar collectors shall be tested in accordance with ISO Standard 9806, Test Methods for Solar Collectors, and SRCC Standard TM-1, Solar Domestic Hot Water System and Component Test Protocol. Collectors in installed solar water-heating systems should meet the following criteria:

1. Be installed with a tilt angle between 10 degrees and 40 degrees of the horizontal; and
2. Be installed at an orientation within 45 degrees of true south.

☐ **R403.6 Mechanical ventilation (Mandatory).** The building shall be provided with ventilation that meets the requirements of the Florida Building Code, Residential, or Florida Building Code, Mechanical, as applicable, or with other approved means of ventilation including: Natural, Infiltration or Mechanical means. Outdoor air intakes and exhausts shall have automatic or gravity dampers that close when the ventilation system is not operating.

☐ **R403.6.1 Whole-house mechanical ventilation system fan efficacy.** When installed to function as a whole-house mechanical ventilation system, fans shall meet the efficacy requirements of Table R403.6.1.

Exception: Where an air handler that is integral to tested and listed HVAC equipment is used to provide whole-house mechanical ventilation, the air handler shall be powered by an electronically commutated motor.

☐ **R403.6.2 Ventilation Air.** Residential buildings designed to be operated at a positive indoor pressure or for mechanical ventilation shall meet the following criteria:

1. The design air change per hour minimums for residential buildings in ASHRAE 62.2, Ventilation for Acceptable Indoor Air Quality, shall be the maximum rates allowed for residential applications.

2. No ventilation or air-conditioning system make-up air shall be provided to conditioned space from attics, crawlspaces, attached enclosed garages or outdoor spaces adjacent to swimming pools or spas.

3. If ventilation air is drawn from enclosed space(s), then the walls of the space(s) from which air is drawn shall be insulated to a minimum of R-11 and the ceiling shall be insulated to a minimum of R-19, space permitting, or R-10 otherwise.

R403.7 Heating and cooling equipment.

☐ **R403.7.1 Equipment sizing (Mandatory).** Heating and cooling equipment shall be sized in accordance with ACCA Manual S based on the equipment loads calculated in accordance with ACCA Manual J or other approved heating and cooling calculation methodologies, based on building loads for the directional orientation of the building. The manufacturer and model number of the outdoor and indoor units (if split system) shall be submitted along with the sensible and total cooling capacities at the design conditions described in Section R302.1. This Code does not allow designer safety factors, provisions for future expansion or other factors that affect equipment sizing. System sizing calculations shall not include loads created by local intermittent mechanical ventilation such as standard kitchen and bathroom exhaust systems. New or replacement heating and cooling equipment shall have an efficiency rating equal to or greater than the minimum required by federal law for the geographic location where the equipment is installed.

TABLE R403.6.1
WHOLE-HOUSE MECHANICAL VENTILATION SYSTEM FAN EFFICACY

FAN LOCATION	AIRFLOW RATE MINIMUM (CFM)	MINIMUM EFFICACY[a] (CFM/WATT)	AIRFLOW RATE MAXIMUM (CFM)
HRV or ERV	Any	1.2 cfm/watt	Any
Range hoods	Any	2.8 cfm/watt	Any
In-line fan	Any	2.8 cfm/watt	Any
Bathroom, utility room	10	1.4 cfm/watt	<90
Bathroom, utility room	90	2.8 cfm/watt	Any

For SI: 1 cfm = 28.3 L/min.

a. When tested in accordance with HVI Standard 916

☐ **R403.7.1.1 Cooling equipment capacity.** Cooling only equipment shall be selected so that its total capacity is not less than the calculated total load but not more than 1.15 times greater than the total load calculated according to the procedure selected in Section R403.7, or the closest available size provided by the manufacturer's product lines. The corresponding latent capacity of the equipment shall not be less than the calculated latent load.
The published value for AHRI total capacity is a nominal, rating-test value and shall not be used for equipment sizing. Manufacturer's expanded performance data shall be used to select cooling-only equipment. This selection shall be based on the outdoor design dry-bulb temperature for the load calculation (or entering water temperature for water-source equipment), the blower CFM provided by the expanded performance data, the design value for entering wet-bulb temperature and the design value for entering dry-bulb temperature.

Design values for entering wet-bulb and dry-bulb temperatures shall be for the indoor dry bulb and relative humidity used for the load calculation and shall be adjusted for return side gains if the return duct(s) is installed in an unconditioned space.

Exceptions:

1. Attached single- and multiple-family residential equipment sizing may be selected so that its cooling capacity is less than the calculated total sensible load but not less than 80 percent of that load.
2. When signed and sealed by a Florida-registered engineer, in attached single- and multiple-family units, the capacity of equipment may be sized in accordance with good design practice.

R403.7.1.2 Heating equipment capacity.

☐ **R403.7.1.2.1 Heat pumps.** Heat pump sizing shall be based on the cooling requirements as calculated according to Section R403.7.1.1, and the heat pump total cooling capacity shall not be more than 1.15 times greater than the design cooling load even if the design heating load is 1.15 times greater than the design cooling load.

☐ **R403.7.1.2.2 Electric resistance furnaces.** Electric resistance furnaces shall be sized within 4 kW of the design requirements calculated according to the procedure selected in Section R403.7.1.

☐ **R403.7.1.2.3 Fossil fuel heating equipment.** The capacity of fossil fuel heating equipment with natural draft atmospheric burners shall not be less than the design load calculated in accordance with Section R403.7.1.

☐ **R403.7.1.3 Extra capacity required for special occasions.** Residences requiring excess cooling or heating equipment capacity on an intermittent basis, such as anticipated additional loads caused by major entertainment events, shall have equipment sized or controlled to prevent continuous space cooling or heating within that space by one or more of the following options:

1. A separate cooling or heating system is utilized to provide cooling or heating to the major entertainment areas.
2. A variable capacity system sized for optimum performance during base load periods is utilized.

☐ **R403.8 Systems serving multiple dwelling units (Mandatory).** Systems serving multiple dwelling units shall comply with Sections C403 and C404 of the Florida Building Code, Energy Conservation—Commercial Provisions in lieu of Section R403.

☐ **R403.9 Snow melt and ice system controls (Mandatory).** Snow- and ice-melting systems, supplied through energy service to the building, shall include automatic controls capable of shutting off the system when the pavement temperature is above 50°F (10°C), and no precipitation is falling and an automatic or manual control that will allow shutoff when the outdoor temperature is above 40°F (4.8°C).

☐ **403.10 Pools and permanent spa energy consumption (Mandatory).** The energy consumption of pools and permanent spas shall be in accordance with Sections R403.10.1 through R403.10.5.

☐ **R403.10.1 Heaters.** The electric power to heaters shall be controlled by a readily accessible on-off switch that is an integral part of the heater mounted on the exterior of the heater, or external to and within 3 feet (914 mm) of the heater. Operation of such switch shall not change the setting of the heater thermostat. Such switches shall be in addition to a circuit breaker for the power to the heater.
Gas-fired heaters shall not be equipped with continuously burning ignition pilots.

MANDATORY REQUIREMENTS (Continued)

☐ **R403.10.2 Time switches.** Time switches or other control methods that can automatically turn off and on according to a preset schedule shall be installed for heaters and pump motors. Heaters and pump motors that have built-in time switches shall be in compliance with this section.

Exceptions:
1. Where public health standards require 24-hour pump operation.
2. Pumps that operate solar- and waste-heat-recovery pool heating systems
3. Where pumps are powered exclusively from on-site renewable generation.

☐ **R403.10.3 Covers.** Outdoor heated swimming pools and outdoor permanent spas shall be equipped with a vapor-retardant cover on or at the water surface or a liquid cover or other means proven to reduce heat loss.

Exception: Where more than 70 percent of the energy for heating, computed over an operation season, is from site-recovered energy, such as from a heat pump or solar energy source, covers or other vapor-retardant means shall not be required

☐ **R403.10.4 Gas- and oil-fired pool and spa heaters.** All gas- and oil-fired pool and spa heaters shall have a minimum thermal efficiency of 82 percent for heaters manufactured on or after April 16, 2013, when tested in accordance with ANSI Z 21.56. Pool heaters fired by natural or LP gas shall not have continuously burning pilot lights.

☐ **R403.10.5 Heat pump pool heaters.** Heat pump pool heaters shall have a minimum COP of 4.0 when tested in accordance with AHRI 1160, Table 2, Standard Rating Conditions-Low Air Temperature. A test report from an independent laboratory is required to verify procedure compliance. Geothermal swimming pool heat pumps are not required to meet this standard.

☐ **R403.11 Portable spas (Mandatory).** The energy consumption of electric-powered portable spas shall be controlled by the requirements of APSP-14

☐ **R403.13 Dehumidifiers (Mandatory).** If installed, a dehumidifier shall conform to the following requirements:

1. The minimum rated efficiency of the dehumidifier shall be greater than 1.7 liters/ kWh if the total dehumidifier capacity for the house is less than 75 pints/day and greater than 2.38 liters/kWh if the total dehumidifier capacity for the house is greater than or equal to 75 pints/day.
2. The dehumidifier shall be controlled by a sensor that is installed in a location where it is exposed to mixed house air.
3. Any dehumidifier unit located in unconditioned space that treats air from conditioned space shall be insulated to a minimum of R-2.
4. Condensate disposal shall be in accordance with Section M1411.3.1 of the Florida Building Code, Residential.

☐ **R403.13.1 Ducted dehumidifiers.** Ducted dehumidifiers shall, in addition to conforming to the requirements of Section R403.13, conform to the following requirements:

1. If a ducted dehumidifier is configured with return and supply ducts both connected into the supply side of the cooling system, a backdraft damper shall be installed in the supply air duct between the dehumidifier inlet and outlet duct.
2. If a ducted dehumidifier is configured with only its supply duct connected into the supply side of the central heating and cooling system, a backdraft damper shall be installed in the dehumidifier supply duct between the dehumidifier and central supply duct.
3. A ducted dehumidifier shall not be ducted to or from a central ducted cooling system on the return duct side upstream from the central cooling evaporator coil.
4. Ductwork associated with a dehumidifier located in unconditioned space shall be insulated to a minimum of R-6.

SECTION R404
ELECTRICAL POWER AND LIGHTING SYSTEMS

☐ **R404.1 Lighting equipment (Mandatory).** Not less than 90 percent of the lamps in permanently installed luminaires shall have an efficacy of at least 45 lumens-per-watt or shall utilize lamps with an efficacy of not less than 65 lumens-per-watt.

R404.1.1 Lighting equipment (Mandatory). uel gas lighting systems shall not have continuously burning pilot lights.

2020 - AIR BARRIER AND INSULATION INSPECTION COMPONENT CRITERIA
TABLE 402.4.1.1
AIR BARRIER AND INSULATION INSPECTION COMPONENT CRITERIA[a]

Project Name:	200701 Magnolia 3BD	Builder Name:	
Street:	7240 & 7338 Massachusetts ave	Permit Office:	
City, State, Zip:	Newport RIchey, FL, 34653	Permit Number:	
Owner:		Jurisdiction:	
Design Location:	FL, CLEAR_ST_PETERSBURG	County:	Pasco(Florida Climate Zone 2)

COMPONENT	AIR BARRIER CRITERIA	INSULATION INSTALLATION CRITERIA	CHECK
General requirements	A continuous air barrier shall be installed in the building envelope. The exterior thermal envelope contains a continuous air barrier. Breaks or joints in the air barrier shall be sealed.	Air-permeable insulation shall not be used as a sealing material.	
Ceiling/attic	The air barrier in any dropped ceiling/soffit shall be aligned with the insulation and any gaps in the air barrier shall be sealed. Access openings, drop down stairs or knee wall doors to unconditioned attic spaces shall be sealed.	The insulation in any dropped ceiling/soffit shall be aligned with the air barrier.	
Walls	The junction of the foundation and sill plate shall be sealed. The junction of the top plate and the top of exterior walls shall be sealed. Knee walls shall be sealed.	Cavities within corners and headers of frame walls shall be insulated by completely filling the cavity with a material having a thermal resistance of R-3 per inch minimum Exterior thermal envelope insulation for framed walls shall be installed in substantial contact and continuous alignment with the air barrier.	
Windows, skylights and doors	The space between window/door jambs and framing, and skylights and framing shall be sealed.		
Rim joists	Rim joists shall include the air barrier.	Rim joists shall be insulated.	
Floors (including above-garage and cantilevered floors)	The air barrier shall be installed at any exposed edge of insulation.	Floor framing cavity insulation shall be installed to maintain permanent contact with the underside of subfloor decking, or floor framing cavity insulation shall be permitted to be in contact with the top side of sheathing, or continuous insulation installed on the underside of floor framing and extends from the bottom to the top of all perimeter floor framing members.	
Crawl space walls	Exposed earth in unvented crawl spaces shall be covered with a Class I vapor retarder with overlapping joints taped.	Where provided instead of floor insulation, insulation shall be permanently attached to the crawlspace walls.	
Shafts, penetrations	Duct shafts, utility penetrations, and flue shafts opening to exterior or unconditioned space shall be sealed.		
Narrow cavities		Batts in narrow cavities shall be cut to fit, or narrow cavities shall be filled by insulation that on installation readily conforms to the available cavity spaces.	
Garage separation	Air sealing shall be provided between the garage and conditioned spaces.		
Recessed lighting	Recessed light fixtures installed in the building thermal envelope shall be sealed to the finished surface.	Recessed light fixtures installed in the building thermal envelope shall be air tight and IC rated.	
Plumbing and wiring		Batt insulation shall be cut neatly to fit around wiring and plumbing in exterior walls, or insulation that on installation readily conforms to available space shall extend behind piping and wiring.	
Shower/tub on exterior wall	The air barrier installed at exterior walls adjacent to showers and tubs shall separate them from the showers and tubs.	Exterior walls adjacent to showers and tubs shall be insulated.	
Electrical/phone box on exterior walls	The air barrier shall be installed behind electrical or communication boxes or air-sealed boxes shall be installed.		
HVAC register boots	HVAC supply and return register boots that penetrate building thermal envelope shall be sealed to the sub-floor, wall covering or ceiling penetrated by the boot.		
Concealed sprinklers	When required to be sealed, concealed fire sprinklers shall only be sealed in a manner that is recommended by the manufacturer. Caulking or other adhesive sealants shall not be used to fill voids voids between fire sprinkler cover plates and walls or ceilings.		

a. In addition, inspection of log walls shall be in accordance with the provisions of ICC-400.

Envelope Leakage Test Report (Blower Door Test)
Residential Prescriptive, Performance or ERI Method Compliance
2020 Florida Building Code, Energy Conservation, 7th Edition

Jurisdiction:	Permit #:

Job Information

Builder: Community: Lot: NA

Address: 7240 & 7338 Massachusetts ave

City: Newport RIchey State: FL Zip: 34653

Air Leakage Test Results *Passing results must meet either the Performance, Prescriptive, or ERI Method*

○ **PRESCRIPTIVE METHOD-**The building or dwelling unit shall be tested and verified as having an air leakage rate of not exceeding 7 air changes per hour at a pressure of 0.2 inch w.g. (50 Pascals) in Climate Zones 1 and 2.

● **PERFORMANCE or ERI METHOD-**The building or dwelling unit shall be tested and verified as having an air leakage rate of not exceeding the selected ACH(50) value, as shown on Form R405-2020 (Performance) or R406-2020 (ERI), section labeled as infiltration, sub-section ACH50.

ACH(50) specified on Form R405-2020-Energy Calc (Performance) or R406-2020 (ERI): 7.000

_____ x 60 ÷ 9680 = _____
CFM(50) Building Volume ACH(50)

☐ **PASS**

☐ When ACH(50) is less than 3, Mechanical Ventilation installation must be verified by building department.

Method for calculating building volume:

○ Retrieved from architectural plans

● Code software calculated

○ Field measured and calculated

R402.4.1.2 Testing. Testing shall be conducted in accordance with ANSI/RESNET/ICC 380 and reported at a pressure of 0.2 inch w.g. (50 Pascals). Testing shall be conducted by either individuals as defined in Section 553.993(5) or (7), *Florida Statues.*or individuals licensed as set forth in Section 489.105(3)(f), (g), or (i) or an approved third party. A written report of the results of the test shall be signed by the party conducting the test and provided to the*code official.* Testing shall be performed at any time after creation of all penetrations of the *building thermal envelope.*

During testing:
1. Exterior windows and doors, fireplace and stove doors shall be closed, but not sealed, beyond the intended weatherstripping or other infiltration control measures.
2. Dampers including exhaust, intake, makeup air, back draft and flue dampers shall be closed, but not sealed beyond intended infiltration control measures.
3. Interior doors, if installed at the time of the test, shall be open.
4. Exterior doors for continuous ventilation systems and heat recovery ventilators shall be closed and sealed.
5. Heating and cooling systems, if installed at the time of the test, shall be turned off.
6. Supply and return registers, if installed at the time of the test, shall be fully open.

Testing Company

Company Name: _____ Phone: _____

I hereby verify that the above Air Leakage results are in accordance with the 2020 7th Edition Florida Building Code Energy Conservation requirements according to the compliance method selected above.

Signature of Tester: _____ Date of Test: _____

Printed Name of Tester: _____

License/Certification #: _____ Issuing Authority: _____

BID SET 08/05/2022

Duct Leakage Test Report

Residential Prescriptive, Performance or ERI Method Compliance
2020 Florida Building Code, Energy Conservation, 7th Edition

Jurisdiction:	Permit #:

Job Information

Builder: Community: Lot: NA

Address: 7240 & 7338 Massachusetts ave

City: Newport RIchey State: FL Zip: 34653

Duct Leakage Test Results

System 1	_____	cfm25
System 2	_____	cfm25
System 3	_____	cfm25
Sum of others	_____	cfm25
Total of all	_____	cfm25

_____ ÷ 968 = _____Qn

Total of all systems — Total Conditioned Square Footage

☐ **PASS** ☐ **FAIL**

○ **Prescriptive Method** cfm25 (Total)

To qualify as "substantially leak free" Qn Total must be less than or equal to 0.04 if air handler unit is installed. If air handler unit is not installed, Qn Total must be less than or equal to 0.03. This testing method meets the requirements in accordance with Section R403.3.3.

Is the air handler unit installed during testing? ☐ YES (= .04 Qn) ☐ NO (= .03 Qn)

● **Performance/ERI Method** cfm25 (Out or Total)

To qualify using this method, Qn must not be greater than the proposed duct leakage Qn specified on Form R405-2020 or R406-2020.

Leakage Type selected on Form R405-2020 (EnergyCalc) or R406-2020	*Qn specified on Form R405-2020 (EnergyCalc) or R406-2020*
Proposed Leak Free	0.03

Duct tightness shall be verified by testing in accordance with ANSI/RESNET/ICC380 by either individuals as defined in Section 553.993(5) or (7), Florida Statutes, or individuals licensed as set forth in Section 489.105(3)(f), (g) or (i), Florida Statutes.

Testing Company

Company Name: _____ Phone: _____

I hereby verify that the above duct leakage testing results are in accordance with the Florida Building Code requirements with the selected compliance path as stated above, either the Prescriptive Method or Performance Method.

Signature of Tester: _____ Date of Test: _____

Printed Name of Tester: _____

License/Certification #: _____ Issuing Authority: _____

Air Handler #3 - AHU-2 (3 BD) - Total Load Summary

Air Handler Description:	AHU-2 (3 BD) Constant Volume - Proportion
Supply Air Fan:	Draw-Thru with program estimated horsepower of 0.09 HP
Fan Input:	90% motor and fan efficiency with 0.5 in. water across the fan
Sensible Heat Ratio:	0.95

--- This system occurs 1 time(s) in the building. ---

Air System Peak Time:	5pm in August.
Outdoor Conditions:	Clg: 91° DB, 77° WB, 120.09 grains, Htg: 42° DB
Indoor Conditions:	Clg: 75° DB, 50% RH, Htg: 70° DB

Summer: Ventilation controls outside air, ----- Winter: Ventilation controls outside air.

Room Space sensible loss:	7,069	Btuh				
Infiltration sensible loss:	0	Btuh	0	CFM		
Outside Air sensible loss:	2,108	Btuh	70	CFM		
Supply Duct sensible loss:	0	Btuh				
Return Duct sensible loss:	0	Btuh				
Return Plenum sensible loss:	0	Btuh				
Total System sensible loss:					9,177	Btuh

Heating Supply Air: 7,069 / (1.000 X 1.08 X 25) =	262	CFM
Winter Vent Outside Air (26.7% of supply) =	70	CFM

Room space sensible gain:	23,180	Btuh				
Infiltration sensible gain:	0	Btuh				
Draw-thru fan sensible gain:	236	Btuh				
Supply duct sensible gain:	0	Btuh				
Reserve sensible gain:	0	Btuh				
Total sensible gain on supply side of coil:					23,416	Btuh

Cooling Supply Air: 23,416 / (1.000 X 1.1 X 20) =	1,065	CFM
Summer Vent Outside Air (6.6% of supply) =	70	CFM

Return duct sensible gain:	0	Btuh				
Return plenum sensible gain:	0	Btuh				
Outside air sensible gain:	1,232	Btuh	70	CFM		
Blow-thru fan sensible gain:	0	Btuh				
Total sensible gain on return side of coil:					1,232	Btuh
Total sensible gain on air handling system:					24,647	Btuh

Room space latent gain:	1,100	Btuh
Infiltration latent gain:	0	Btuh
Outside air latent gain:	2,519	Btuh
Total latent gain on air handling system:	3,619	Btuh
Total system sensible and latent gain:	28,266	Btuh

Check Figures

Total Air Handler Supply Air (based on a 20° TD):	1,065	CFM
Total Air Handler Vent. Air (6.57% of Supply):	70	CFM
Total Conditioned Air Space:	964	Sq.ft
Supply Air Per Unit Area:	1.1045	CFM/Sq.ft
Area Per Cooling Capacity:	409.3	Sq.ft/Ton
Cooling Capacity Per Area:	0.0024	Tons/Sq.ft
Heating Capacity Per Area:	9.52	Btuh/Sq.ft
Total Heating Required With Outside Air:	9,177	Btuh
Total Cooling Required With Outside Air:	2.36	Tons

BID SET 08/05/2022

Florida Building Code, Seventh Edition (2020) - Energy Conservation

EnergyGauge Summit® Fla/Com-2020, Effective Date: Dec 31, 2020

C401.2.1: ASHRAE Energy Cost Budget Option

Compliance applying ASHRAE Section 11

Check List

Applications for compliance with the Florida Building Code, Energy Conservation shall include:

- [x] This Checklist
- [x] The full compliance report generated by the software that contains the project summary, compliance summary, certifications and detailed component compliance reports.
- [x] The compliance report must include the full input report generated by the software as contigous part of the compliance report.
- [x] Boxes appropriately checked in the Mandatory Section of the complaince report.

- [x] HVAC Load Calculations (Manual N)
- [x] Outside Air Calculations

THIS ITEM HAS BEEN ELECTRONICALLY SIGNED AND SEALED BY MICHAEL A. COSTELLO, PE USING A DIGITAL SIGNATURE AND DATE. PRINTED COPIES OF THIS DOCUMENT ARE NOT CONSIDERED SIGNED AND SEALED AND THE SIGNATURE MUST BE VERIFIED ON ANY ELECTRONIC COPIES.

BID SET 08/05/2022

PROJECT SUMMARY

Short Desc:	Magnolia Oaks	**Description:**	Magnolia Oaks
Owner:	Pasco County Housing Authority		
Address1:	7240 & 7338 Massachusetts Ave	**City:**	New Port Richey
Address2:	Enter Address here	**State:**	FL
		Zip:	34653
Type:	Office	**Class:**	New Finished building
Jurisdiction:	NEW PORT RICHEY, PASCO COUNTY, FL (611200)		
Conditioned Area:	1569 SF	**Conditioned & UnConditioned Area:**	1569 SF
No of Stories:	1	**Area entered from Plans**	0 SF
Permit No:	0	**Max Tonnage**	3.9
		If different, write in:	_____

Compliance Summary

Component	Design	Criteria	Result
Gross Energy Cost (in $)	781.0	847.0	**PASSED**
LIGHTING CONTROLS			**PASSES**
EXTERNAL LIGHTING			**PASSES**
HVAC SYSTEM			**PASSES**
PLANT			**No Entry**
WATER HEATING SYSTEMS			**Not Checked**
PIPING SYSTEMS			**PASSES**
Met all required compliance from Check List?			**Yes/No/NA**

IMPORTANT MESSAGE
Info 5009 -- -- -- An input report of this design building must be submitted along with this Compliance Report

CERTIFICATIONS

I hereby certify that the plans and specifications covered by this calculation are in compliance with the Florida Energy Code

Prepared By: Michael A. Costello

Building Official: _____

Date: 07/06/2022

Date: _____

I certify that this building is in compliance with the FLorida Energy Efficiency Code

Owner Agent: _____

Date: _____

If Required by Florida law, I hereby certify (*) that the system design is in compliance with the Florida Energy Efficiency Code

Architect: _____ Reg No: _____ Signature_____

Electrical Designer: Adam T. Powell Reg No: PE73853 Signature_____

Lighting Designer: Adam T. Powell Reg No: PE73853 Signature_____

Mechanical Designer: Michael A. Costello Reg No: PE81436 Signature_____

Plumbing Designer: Michael A. Costello Reg No: PE0081436 Signature_____

(*) Signature is required where Florida Law requires design to be performed by registered design professionals per C103.1.1.1.2

Project: Magnolia Oaks
Title: Magnolia Oaks
Type: Office
(WEA File: FL_TAMPA_INTERNATIONAL_AP.tm3)

Building End Uses

	1) Proposed	2) Baseline
Total	*49.60*	*53.90*
	$781	*$847*
ELECTRICITY(MBtu/kWh/$)	49.60	53.90
	14567	15803
	$781	*$847*
AREA LIGHTS	11.70	7.70
	3424	2257
	$184	*$121*
MISC EQUIPMT	13.00	13.00
	3822	3822
	$205	*$205*
PUMPS & MISC	0.10	0.10
	20	19
	$1	*$1*
SPACE COOL	15.60	14.80
	4581	4336
	$246	*$232*
SPACE HEAT	1.50	1.30
	452	385
	$24	*$21*
VENT FANS	7.70	17.00
	2268	4985
	$122	*$267*

Credits Applied: None
Passing Criteria = 847
Design (including any credits) = 781
Passing requires Proposed Building cost to be at most 100% of Baseline cost. This Proposed Building is at 92.2%

PASSES

Project: Magnolia Oaks
Title: Magnolia Oaks
Type: Office
(WEA File: FL_TAMPA_INTERNATIONAL_AP.tm3)

External Lighting Compliance

Description	Category	Tradable?	Allowance (W/Unit)	Area or Length or No. of Units (Sqft or ft)	ELPA (W)	CLP (W)
Ext Light 1	Building facades by area	No	0.15	1,170.0	176	50
Ext Light 2	Building facades by area	No	0.15	54.0	8	15

Tradable Surfaces: 0 (W) Allowance for Tradable: 493.1 (W)
All External Lighting: 65 (W)
Complicance check includes a excess/Base allowance of 500.00(W)
Ext Light 2-- 6.9W from the excess/Base allowance was applied to this item to comply

PASSES

Project: Magnolia Oaks
Title: Magnolia Oaks
Type: Office
(WEA File: FL_TAMPA_INTERNATIONAL_AP.tm3)

Lighting Controls Compliance

Acronym	Ashrae ID	Description	Area (sq.ft)	Design CP	Min CP	Compliance
1 Gathering Room	12	Lobby (General) - Reception and Waiting	529	3	1	**PASSES**
2 Fitness Room	0	Unknown	301	2	1	**PASSES**
3 Gathering Lobby	0	Unknown	127	2	1	**PASSES**
4 Office	0	Unknown	128	1	1	**PASSES**
5 Restroom	0	Unknown	63	3	1	**PASSES**
6 Restroom	0	Unknown	58	3	1	**PASSES**
7 Kitchen	0	Unknown	155	3	1	**PASSES**
8 Mechanical Room	0	Unknown	51	2	1	**PASSES**
9 Storage	0	Unknown	50	1	1	**PASSES**
10 Office	0	Unknown	107	1	1	**PASSES**

PASSES

Project: Magnolia Oaks
Title: Magnolia Oaks
Type: Office
(WEA File: FL_TAMPA_INTERNATIONAL_AP.tm3)

System Report Compliance

AHU-C-1 **System 1** **Constant Volume Air Cooled Split System < 65000 Btu/hr** **No. of Units 1**

Component	Category	Capacity	Design Eff	Eff Criteria	Design IPLV	IPLV Criteria	Comp-liance
Cooling System	Air Conditioners Air Cooled Split System < 65000 Btu/h Cooling Capacity	46250	14.50	13.00	8.00		**PASSES**
Heating System	Electric Furnace	27294	1.00	1.00			**PASSES**
Air Handling System -Supply	Air Handler (Supply) - Constant Volume	1600	0.40	0.82			**Not Required**
Air Distribution System (Sup)	Not in Check list - Compliance Ignored		6.00	6.00			**N/A**

PASSES

Plant Compliance

Description	Installed No	Size	Design Eff	Min Eff	Design IPLV	Min IPLV	Category	Comp liance

None

Project: Magnolia Oaks
Title: Magnolia Oaks
Type: Office
(WEA File: FL_TAMPA_INTERNATIONAL_AP.tm3)

Water Heater Compliance

Description	Type	Category	Design Eff	Min Eff	Design Loss	Max Loss	Comp liance
EWH-2	Electric Storage water heater	Unknown	0.98				**Not Checked**

Not Checked

Project: Magnolia Oaks
Title: Magnolia Oaks
Type: Office
(WEA File: FL_TAMPA_INTERNATIONAL_AP.tm3)

Piping System Compliance

Category	Pipe Dia [inches]	Is Runout?	Operating Temp [F]	Ins Cond [Btu-in/hr .SF.F]	Ins Thick [in]	Req Ins Thick [in]	Compl- iance
Heating System (Steam, Steam Condensate, & Hot Water)	0.25	False	105.00	0.28	1.00	0.50	**PASSES**

PASSES

Mandatory Requirements (as applicable)

Requirements compiled by US Department of Energy and Pacific Northwest National Laboratory. Adopted for FBC with permission. Not all may be applicable

Topic	Section	Component	Description	Yes	N/A	Exempt
1. To be checked by Designer or Engineer						
Insulation	5.8.1.2	Envelope	Below-grade wall insulation installed per manufacturer's instructions.	☐	☑	☐
Insulation	5.8.1.2	Envelope	Slab edge insulation installed per manufacturer's instructions.	☐	☑	☐
Insulation	5.5.3.5	Envelope	Slab edge insulation depth/length.	☐	☑	☐
Insulation	6.4.4.1.5	Envelope	Bottom surface of floor structures incorporating radiant heating insulated to >=R-3.5.	☐	☑	☐
SYSTEM_SPECIFIC	6.5.1, 6.5.1.1, 6.5.1.3, 6.5.1.4	Mechanical	Air economizers provided where required (and not exempted), meet the requirements for design capacity, control signal, ventilation controls, high-limit shut-off, integrated economizer control, and provide a means to relieve excess outside air during operation.	☐	☑	☐
SYSTEM_SPECIFIC	6.5.1, 6.5.1.2, 6.5.1.2.1, 6.5.1.3	Mechanical	Water economizers provided where required, meet the requirements for design capacity, maximum pressure drop and integrated economizer control. Capable if providing 100% of the expected system cooling load when outdoor air <= 50F.	☐	☑	☐
SYSTEM_SPECIFIC	6.5.1.5	Mechanical	Economizer operation will not increase heating energy use during normal operation.	☐	☑	☐
SYSTEM_SPECIFIC	6.5.2.2.1	Mechanical	Three-pipe hydronic systems using a common return for hot and chilled water are not used.	☐	☑	☐
SYSTEM_SPECIFIC	6.5.2.2.3	Mechanical	Hydronic heat pump systems connected to a common water loop meet heat rejection and heat addition requirements.	☐	☑	☐
SYSTEM_SPECIFIC	6.5.1.6	Mechanical	Water economizer specified on hydronic cooling and humidification systems designed to maintain inside humidity at >35 ºF dewpoint if an economizer is required.	☐	☑	☐
SYSTEM_SPECIFIC	6.5.3.1.1	Mechanical	HVAC fan systems at design conditions do not exceed allowable fan system motor nameplate hp or fan system bhp.	☑	☐	☐
SYSTEM_SPECIFIC	6.5.3.1.2	Mechanical	HVAC fan motors not larger than the first available motor size greater than the bhp.	☑	☐	☐
HVAC	6.5.6.1	Mechanical	Exhaust air energy recovery on systems meeting Tables 6.5.6.1-1, and 6.5.6.1-2.	☐	☑	☐
SYSTEM_SPECIFIC	7.4.2	Mechanical	Service water heating equipment meets efficiency requirements.	☑	☐	☐
SYSTEM_SPECIFIC	7.5.2	Mechanical	Service water heating equipment used for space heating complies with the service water heating equipment requirements.	☐	☑	☐
Insulation	5.8.1.2	Envelope	Above-grade wall insulation installed per manufacturer's instructions.	☑	☐	☐
Insulation	5.8.1.2	Envelope	Floor insulation installed per manufacturer's instructions.	☑	☐	☐
Controls	10.4.3	Mechanical	Elevators are designed with the proper lighting, ventilation power, and standby mode.	☐	☑	☐
SYSTEM_SPECIFIC	6.4.1.1, 6.8.1-7a	Mechanical	Heat Rejection Equipment: Minimum Efficiency Requirement >=40.2 gpm/hp .	☐	☑	☐
SYSTEM_SPECIFIC	6.4.1.1, 6.8.1-7b	Mechanical	Heat Rejection Equipment: Minimum Efficiency Requirement >=20.0 gpm/hp.	☐	☑	☐
SYSTEM_SPECIFIC	6.4.1.1, 6.8.1-7c	Mechanical	Heat Rejection Equipment: Minimum Efficiency Requirement >=16.1 gpm/hp.	☐	☑	☐

SYSTEM_SPECIFIC	6.4.1.1, 6.8.1-7d	Mechanical	Heat Rejection Equipment: Minimum Efficiency Requirement >=7.0 gpm/hp	☐	☑	☐
SYSTEM_SPECIFIC	6.5.5.3	Mechanical	Centrifugal fan open-circuit cooling towers having combined rated capacity >= 1100 gpm meets minimum efficiency requirement: >=38.2 gpm/hp.	☐	☑	☐
SYSTEM_SPECIFIC	6.4.1.1, 6.8.1-7e	Mechanical	Heat Rejection Equipment: Minimum Efficiency Requirement >=176 kBtu/h-hp	☐	☑	☐
SYSTEM_SPECIFIC	6.4.1.1, 6.8.1-7f	Mechanical	Heat Rejection Equipment: Minimum Efficiency Requirement >=157 kBtu/h-hp w/ R-507A test fluid.	☐	☑	☐
SYSTEM_SPECIFIC	6.4.1.1, 6.8.1-7g	Mechanical	Heat Rejection Equipment: Minimum Efficiency Requirement >=134 kBtu/h-hp w/ Ammonia test fluid..	☐	☑	☐
SYSTEM_SPECIFIC	6.4.1.1, 6.8.1-7h	Mechanical	Heat Rejection Equipment: Minimum Efficiency Requirement >=135 kBtu/h-hp w/ R-507A test fluid.	☐	☑	☐
SYSTEM_SPECIFIC	6.4.1.1, 6.8.1-7i	Mechanical	Heat Rejection Equipment: Minimum Efficiency Requirement >=110 kBtu/h-hp w/ Ammonia test fluid.	☐	☑	☐
SYSTEM_SPECIFIC	7.5.3	Mechanical	Gas-fired water-heating equipment installed in new buildings: where a singular piece of water-heating equipment >= 1,000 kBtu/h serves the entire building, thermal efficiency must be >= 90 Et. Where multiple pieces of water-heating equipment serve the building with combined rating is >= 1,000 kBtu/h, the combined input-capacity-weighted-average thermal efficiency , thermal efficiency must be >= 90 Et. Exclude input rating of equipment in individual dwelling units and equipment <= 100 kBtu/h.	☐	☑	☐
SYSTEM_SPECIFIC	6.5.3.2.4	Mechanical	Return and relief fans used to meet Section 6.5.1.1.5 have relief air rate controlled to maintain building pressure through differential supply-return airflow tracking. Systems with supply fans allowed to control the relief system based on oudoor air damper position. Fans have variable speed control or other devices for managing total return/relief fan system demand per section threshold.	☐	☑	☐
HVAC	6.5.2.6	Mechanical	Units that provide ventilation air to multiple zones and operate in conjunction with zone heating and cooling systems are prevented from using heating or heat recovery to warm supply air above 60°F when representative building loads or outdoor air temperature indicate that most zones demand cooling.	☐	☑	☐
HVAC	6.5.4.7	Mechanical	Chilled-water cooling coils provide a 15°F or higher temperature difference between leaving and entering water temperatures and a minimum of 57°F leaving water temperature at design conditions	☐	☑	☐
SYSTEM_SPECIFIC	6.5.3.4	Mechanical	Parallel-flow fan-powered VAV air terminals have automatic controls to a) turn off the terminal fan except when space heating is required or if required for ventilation; b) turn on the terminal fan as the first stage of heating before the heating coil is activated; and c) during heating for warmup or setback temperature control, either operate the terminal fan and heating coil without primary air or reverse the terminal damper logic and provide heating from the central air handler through primary air.	☐	☑	☐

SYSTEM_SPECIFIC	6.5.3.7	Mechanical	Required minimum outdoor air rate is the larger of minimum outdoor air rate or minimum exhaust air rate required by Standard 62.1, Standard 170, or applicable codes or accreditation standards. Outdoor air ventilation systems shall comply with one of the following: a) design minimum system outdoor air provided < 135% of the required minimum outdoor air rate, b) dampers, ductwork, and controls allow the system to supply <= the required minimum outdoor air rate with a single set-point adjustment., or c) system includes exhaust air energy recovery complying with Section 6.5.6.1.	☑	☐	☐
HVAC	6.8.1-15, 6.8.1-16	Mechanical	Electrically operated DX-DOAS units meet requirements per Tables 6.8.1-15 or 6.8.1-16.	☐	☑	☐
2. To be checked by Plan Reviewer						
Plan Review	4.2.2, 5.4.3.1.1, 5.7	Envelope	Plans and/or specifications provide all information with which compliance can be determined for the building envelope and document where exceptions to the standard are claimed.	☐	☐	☐
Plan Review	4.2.2, 6.4.4.2.1, 6.7.2	Mechanical	Plans, specifications, and/or calculations provide all information with which compliance can be determined for the mechanical systems and equipment and document where exceptions to the standard are claimed. Load calculations per acceptable engineering standards and handbooks.	☐	☐	☐
Plan Review	4.2.2, 7.7.1, 10.4.2	Mechanical	Plans, specifications, and/or calculations provide all information with which compliance can be determined for the service water heating systems and equipment and document where exceptions to the standard are claimed. Hot water system sized per manufacturer's sizing guide.	☐	☐	☐
Plan Review	4.2.2, 8.4.1.1, 8.4.1.2, 8.7	Project	Plans, specifications, and/or calculations provide all information with which compliance can be determined for the electrical systems and equipment and document where exceptions are claimed. Feeder connectors sized in accordance with approved plans and branch circuits sized for maximum drop of 3%.	☐	☐	☐
Plan Review	4.2.2, 9.4.3, 9.7	Interior Lighting	Plans, specifications, and/or calculations provide all information with which compliance can be determined for the interior lighting and electrical systems and equipment and document where exceptions to the standard are claimed. Information provided should include interior lighting power calculations, wattage of bulbs and ballasts, transformers and control devices.	☐	☐	☐
Plan Review	9.7	Exterior Lighting	Plans, specifications, and/or calculations provide all information with which compliance can be determined for the exterior lighting and electrical systems and equipment and document where exceptions to the standard are claimed. Information provided should include exterior lighting power calculations, wattage of bulbs and ballasts, transformers and control devices.	☐	☐	☐
Insulation	5.8.1.7.3	Envelope	Insulation in contact with the ground has <=0.3% water absorption rate per ASTM C272.	☐	☐	☐
Air Leakage	5.4.3.4	Envelope	Vestibules are installed where building entrances separate conditioned space from the exterior, and meet exterior envelope requirements. Doors have self-closing devices, and are >=7 ft apart (>= 16 ft apart for adjoinging floor area >= 40000 sq.ft.). Vestibule floor area <=7 50 sq.ft. or 2 percent of the adjoining conditioned floor area.	☐	☐	☐

Plan Review	5.5.4.2.3	Envelope	In buildings > 2,500 ft2, any enclosed spaces directly under a roof with ceiling heights > 15 ft. and used as an office, lobby, atrium, concourse, corridor, storage (including nonrefrigerated warehouse), gymnasium, fitness/exercise area, playing area, gymnasium seating area, convention exhibit/event space, courtroom, automotive service, fire station engine room, manufacturing corridor/transition and bay areas, retail, library reading and stack areas, distribution/sorting area, transportation baggage and seating areas, or workshop, the following requirements apply: The daylight zone under skylights is >= half the floor area and (a) the skylight area to daylight zone is >= 3 percent with a skylight VT >= 0.40 or (b) the minimum skylight effective aperture >= 1 percent. The skylights have a measured haze value > 90 percent.	☐	☐	☐
Plan Review	5.5.4.2.3	Envelope	In buildings > 2,500 ft2, any enclosed spaces directly under a roof with ceiling heights > 15 ft. and used as an office, lobby, atrium, concourse, corridor, storage (including nonrefrigerated warehouse), gymnasium, fitness/exercise area, playing area, gymnasium seating area, convention exhibit/event space, courtroom, automotive service, fire station engine room, manufacturing corridor/transition and bay areas, retail, library reading and stack areas, distribution/sorting area, transportation baggage and seating areas, or workshop, the following requirements apply: The daylight zone under skylights is >= half the floor area and (a) the skylight area to daylight zone is >= 3 percent with a skylight VT >= 0.40 or (b) the minimum skylight effective aperture >= 1 percent. The skylights have a measured haze value > 90 percent.	☐	☐	☐
Plan Review	5.5.4.2.3	Envelope	In buildings > 2,500 ft2, any enclosed spaces directly under a roof with ceiling heights > 15 ft. and used as an office, lobby, atrium, concourse, corridor, storage (including nonrefrigerated warehouse), gymnasium, fitness/exercise area, playing area, gymnasium seating area, convention exhibit/event space, courtroom, automotive service, fire station engine room, manufacturing corridor/transition and bay areas, retail, library reading and stack areas, distribution/sorting area, transportation baggage and seating areas, or workshop, the following requirements apply: The daylight zone under skylights is >= half the floor area and (a) the skylight area to daylight zone is >= 3 percent with a skylight VT >= 0.40 or (b) the minimum skylight effective aperture >= 1 percent. The skylights have a measured haze value > 90 percent.	☐	☐	☐
Plan Review	5.5.4.2.3	Envelope	In buildings > 2,500 ft2, any enclosed spaces directly under a roof with ceiling heights > 15 ft. and used as an office, lobby, atrium, concourse, corridor, storage (including nonrefrigerated warehouse), gymnasium, fitness/exercise area, playing area, gymnasium seating area, convention exhibit/event space, courtroom, automotive service, fire station engine room, manufacturing corridor/transition and bay areas, retail, library reading and stack areas, distribution/sorting area, transportation baggage and seating areas, or workshop, the following requirements apply: The daylight zone under skylights is >= half the floor area and (a) the skylight area to daylight zone is >= 3 percent with a skylight VT >= 0.40 or (b) the minimum skylight effective aperture >= 1 percent. The skylights have a measured haze value > 90 percent.	☐	☐	☐

Plan Review	5.5.4.2.3	Envelope	In buildings > 2,500 ft2, any enclosed spaces directly under a roof with ceiling heights > 15 ft. and used as an office, lobby, atrium, concourse, corridor, storage (including nonrefrigerated warehouse), gymnasium, fitness/exercise area, playing area, gymnasium seating area, convention exhibit/event space, courtroom, automotive service, fire station engine room, manufacturing corridor/transition and bay areas, retail, library reading and stack areas, distribution/sorting area, transportation baggage and seating areas, or workshop, the following requirements apply: The daylight zone under skylights is >= half the floor area and (a) the skylight area to daylight zone is >= 3 percent with a skylight VT >= 0.40 or (b) the minimum skylight effective aperture >= 1 percent. The skylights have a measured haze value > 90 percent.	☐	☐	☐
Plan Review	5.5.4.2.3	Envelope	In buildings > 2,500 ft2, any enclosed spaces directly under a roof with ceiling heights > 15 ft. and used as an office, lobby, atrium, concourse, corridor, storage (including nonrefrigerated warehouse), gymnasium, fitness/exercise area, playing area, gymnasium seating area, convention exhibit/event space, courtroom, automotive service, fire station engine room, manufacturing corridor/transition and bay areas, retail, library reading and stack areas, distribution/sorting area, transportation baggage and seating areas, or workshop, the following requirements apply: The daylight zone under skylights is >= half the floor area and (a) the skylight area to daylight zone is >= 3 percent with a skylight VT >= 0.40 or (b) the minimum skylight effective aperture >= 1 percent. The skylights have a measured haze value > 90 percent.	☐	☐	☐
HVAC	6.4.3.4.4	Mechanical	Ventilation fans >0.75 hp have automatic controls to shut off fan when not required.	☐	☐	☐
HVAC	6.4.3.8	Mechanical	Demand control ventilation provided for spaces >500 ft2 and >25 people/1000 ft2 occupant density and served by systems with air side economizer, auto modulating outside air damper control, or design airflow >3,000 cfm.	☐	☐	☐
HVAC	6.4.4.1.4	Mechanical	Thermally ineffective panel surfaces of sensible heating panels have insulation >= R-3.5.	☐	☐	☐
HVAC	6.5.2.3	Mechanical	Dehumidification controls provided to prevent reheating, recooling, mixing of hot and cold airstreams or concurrent heating and cooling of the same airstream.	☐	☐	☐
SYSTEM_SPECIFIC	6.5.3.1.3	Mechanical	Fans have efficiency grade (FEG) >= 67. The total efficiency of the fan at the design point of operation <= 15% of maximum total efficiency of the fan.	☐	☐	☐
SYSTEM_SPECIFIC	6.5.3.6	Mechanical	Motors for fans >= 1/12 hp and < 1 hp are electronically-commutated motors or have a minimum motor efficiency of 70%. These motors are also speed adjustable for either balancing or remote control.	☐	☐	☐
SYSTEM_SPECIFIC	6.4.3.10	Mechanical	DDC system installed and capable of and configured to provide control logic including monitoring zone and system demand for fan pressure, pump pressure, heating, and cooling; transferring zone and system demand information from zones to air distribution system controllers and from air distribution systems to heating and cooling plant controllers; automatically detecting and alerting system operator when zones and systems excessively drive the reset logic; allow operator removal of zone(s) from the reset algorithm; AND capable of trending and graphically displaying input and output points.	☐	☐	☐

SYSTEM_SPECIFIC	6.5.3.2.3	Mechanical	Reset static pressure setpoint for DDC controlled VAV boxes reporting to central controller based on the zones requiring the most pressure. Controls provide: zone damper monitoring or indicator of static pressure need; autodetection, alarm, and operator override of zones excessively triggering reset logic.	☐	☐	☐
SYSTEM_SPECIFIC	6.5.3.3	Mechanical	Multiple zone VAV systems with DDC of individual zone boxes have static pressure setpoint reset controls.	☐	☐	☐
SYSTEM_SPECIFIC	6.5.3.5	Mechanical	Multiple zone HVAC systems have supply air temperature reset controls.	☐	☐	☐
SYSTEM_SPECIFIC	6.5.4.1	Mechanical	System turndown requirement met through multiple single-input boilers, one or more modulating boilers, or a combination of single-input and modulating boilers. Boiler input between 1.0 MBtu/h and 5 MBtu/h has 3:1 turndown ratio, boiler input between 5.0 MBtu/h and 10 MBtu/h has 4:1 turndown ratio, boiler input > 10.0 MBtu/h has 5:1 turndown ratio.	☐	☐	☐
HVAC	6.5.4.2	Mechanical	HVAC pumping systems with >= 3 control values designed for variable fluid flow (see section details).	☐	☐	☐
SYSTEM_SPECIFIC	6.5.4.3, 6.5.4.3.1, 6.5.4.3.2	Mechanical	Fluid flow shutdown in pumping systems to multiple chillers or boilers when systems are shut down.	☐	☐	☐
SYSTEM_SPECIFIC	6.5.4.4	Mechanical	Temperature reset by representative building loads in pumping systems >10 hp for chiller and boiler systems >300,000 Btu/h.	☐	☐	☐
SYSTEM_SPECIFIC	6.5.4.5.1	Mechanical	Two-position automatic valve interlocked to shut off water flow when hydronic heat pump with pumping system >10 hp is off.	☐	☐	☐
SYSTEM_SPECIFIC	6.5.4.5.2	Mechanical	Hydronic heat pumps and water-cooled unitary air conditioners with pump systems >5 hp have controls or devices to reduce pump motor demand.	☐	☐	☐
SYSTEM_SPECIFIC	6.5.5.2.1	Mechanical	Fan systems with motors or array of motors (inlcuding the motor service factor) with connected power totaling >=5 hp associated with heat rejection equipment to have controls and/or devises that result in fanmotor demand of <= 30% of design wattage at 50% of design airflow and automatically modulates fan speed to control the leaving fluid temperature or condensing temp/pressure of heat rejection device.	☐	☐	☐
SYSTEM_SPECIFIC	6.5.5.2.2	Mechanical	Multicell heat rejection equipment with variable-speed fan drives installed that operate the maximum number of fans allowed that comply with manufacturers specs and control all fans to the same fan speed required for the instantaneous cooling duty.	☐	☐	☐
SYSTEM_SPECIFIC	6.5.7.1	Mechanical	Conditioned supply air to space with mechanical exhaust <= the greater of criteria of supply flow, required ventilation rate, exhaust flow minu the available transffer air (see section details).	☐	☐	☐
HVAC	6.5.7.2.1	Mechanical	Kitchen hoods >5,000 cfm have make up air >=50% of exhaust air volume.	☐	☐	☐
SYSTEM_SPECIFIC	6.5.7.2.2	Mechanical	Kitchen hoods with a total exhaust airflow rate >5000 cfm meet replacement air, ventilation system, or energy recovery requirements shown in Table 6.5.7.1.3.	☐	☐	☐
SYSTEM_SPECIFIC	6.5.7.2.3	Mechanical	Kitchen hoods with a total exhaust airflow rate >5000 cfm meet replacement air, ventilation system, or energy recovery requirements.	☐	☐	☐
HVAC	6.5.7.2	Mechanical	Fume hoods exhaust systems >=5,000 cfm have VAV hood exhaust and supply systems, direct make-up air or heat recovery.	☐	☐	☐
HVAC	6.5.8.1	Mechanical	Unenclosed spaces that are heated use only radiant heat.	☐	☐	☐

SYSTEM_SPECIFIC	7.5.1	Mechanical	Combined space and water heating system not allowed unless standby loss less than calculated maximum. AHJ has approved or combined connected load <150 kBtu/h.	☐	☐	☐
Other Equipment	10.4.1	Mechanical	Electric motors meet requirements where applicable.	☐	☐	☐
HVAC	6.4.3.3.2	Mechanical	Setback controls allow automatic restart and temporary operation as required for maintenance.	☐	☐	☐
SYSTEM_SPECIFIC	6.4.3.3.3	Mechanical	Systems with setback controls and DDC include optimum start controls. Optimum start algorithm considers mass radiant slab floor temperature.	☐	☐	☐
SYSTEM_SPECIFIC	6.4.3.3.4	Mechanical	Zone isolation devices and controls.	☐	☐	☐
Wattage	9.4.2	Exterior Lighting	Exterior lighting power is consistent with what is shown on the approved lighting plans, demonstrating proposed watts are less than or equal to allowed watts.	☐	☐	☐
Controls	9.4.1.4d	Exterior Lighting	Outdoor parking area luminaires >= 78W and <= 24 ft height controlled to reduce wattage by 50% when area unoccupied over 15 minutes. Controlled power limited to <= 1500W.	☐	☐	☐
Controls	9.4.1.2a	Interior Lighting	Parking garage lighting is equipped with automatic shutoff controls per Section 9.4.1.1(i).	☐	☐	☐
Controls	9.4.1.2b	Interior Lighting	Parking garage luminarie power is automatically reduced by >= 30% when zone < 3600 ft2 has no occupancy after 20 minutes.	☐	☐	☐
Controls	9.4.1.2c	Interior Lighting	Parking garage luminaries in or around covered entrances/exits between building and garage automatically reduced by >= 50% from sunset to sunrise.	☐	☐	☐
Controls	9.4.1.2d	Interior Lighting	Parking garage: Power to luminaires <= 20 ft of any perimeter wall that has a net opening-to-wall ratio >=40% and no exterior obstructions within 20 ft, is automatically reduced in response to daylight >= 50%.	☐	☐	☐
Other Equipment	6.8.1-14	Mechanical	Vapor compression based indoor pool dehumidifiers (single package (indoor air/water cooled or w/out air-cooled condenser) or split system indoor air-cooled) have a minimum 3.5 MRE efficiency rating.	☐	☐	☐
Controls	6.4.3.3.5	Mechanical	Hotels/motel w/ > 50 guest rooms have automatic controls for the HVAC equipment serving each room configured per Section 6.4.3.3.5 subsections 1-3.	☐	☐	☐
3. To be checked by Inspector						
Insulation	5.8.1.7	Envelope	Exterior insulation protected against damage, sunlight, moisture, wind, landscaping and equipment maintenance activities.	☐	☐	☐
HVAC	6.4.3.7	Mechanical	Freeze protection and snow/ice melting system sensors for future connection to controls.	☐	☐	☐
Air Leakage	5.4.3.1	Envelope	Continuous air barrier is wrapped, sealed, caulked, gasketed, and/or taped in an approved manner, except in semiheated spaces in climate zones 1-6.	☐	☐	☐
Air Leakage	5.4.3.2	Envelope	Factory-built and site-assembled fenestration and doors are labeled or certified as meeting air leakage requirements.	☐	☐	☐
Fenestration	5.8.2.1, 5.8.2.3, 5.8.2.4, 5.8.2.5	Envelope	Fenestration products rated (U-factor, SHGC, and VT) in accordance with NFRC or energy code defaults are used.	☐	☐	☐
Fenestration	5.8.2.2	Envelope	Fenestration and door products are labeled, or a signed and dated certificate listing the U-factor, SHGC, VT, and air leakage rate has been provided by the manufacturer.	☐	☐	☐
SYSTEM_SPECIFIC	7.4.4.1	Mechanical	Temperature controls installed on service water heating systems (<=120ºF to maximum temperature for intended use).	☐	☐	☐

SYSTEM_SPECIFIC	7.4.4.2	Mechanical	Automatic time switches installed to automatically switch off the recirculating hot-water system or heat trace.	☐	☐	☐
SYSTEM_SPECIFIC	7.4.6	Mechanical	Heat traps installed on non-circulating storage water tanks.	☐	☐	☐
HVAC	6.4.1.4, 6.4.1.5	Mechanical	HVAC equipment efficiency verified. Non-NAECA HVAC equipment labeled as meeting 90.1.	☐	☐	☐
SYSTEM_SPECIFIC	6.4.1.5.2	Mechanical	PTAC and PTHP with sleeves 16 in. by 42 in. labeled for replacement only.	☐	☐	☐
HVAC	6.4.3.4.1	Mechanical	Stair and elevator shaft vents have motorized dampers that automatically close.	☐	☐	☐
HVAC	6.4.3.4.2, 6.4.3.4.3	Mechanical	Outdoor air and exhaust systems have motorized dampers that automatically shut when not in use and meet maximum leakage rates. Check gravity dampers where allowed.	☐	☐	☐
HVAC	6.4.3.4.5	Mechanical	Enclosed parking garage ventilation has automatic contaminant detection and capacity to stage or modulate fans to 50% or less of design capacity.	☐	☐	☐
HVAC	6.5.3.2.1	Mechanical	DX cooling systems >= 75 kBtu/h (>= 65 kBtu/h effective 1/2016) and chilled-water and evaporative cooling fan motor hp >= ¼ designed to vary supply fan airflow as a function of load and comply with operational requirements.	☐	☐	☐
HVAC	6.4.4.1.1	Mechanical	Insulation exposed to weather protected from damage. Insulation outside of the conditioned space and associated with cooling systems is vapor retardant.	☐	☐	☐
HVAC	6.4.4.1.2	Mechanical	HVAC ducts and plenums insulated per Table 6.8.2. Where ducts or plenums are installed in or under a slab, verification may need to occur during Foundation Inspection.	☐	☐	☐
HVAC	6.4.4.1.3	Mechanical	HVAC piping insulation thickness. Where piping is installed in or under a slab, verification may need to occur during Foundation Inspection.	☐	☐	☐
HVAC	6.4.4.2.1	Mechanical	Ducts and plenums having pressure class ratings are Seal Class A construction.	☐	☐	☐
SYSTEM_SPECIFIC	6.4.4.2.2	Mechanical	Ductwork operating >3 in. water column requires air leakage testing.	☐	☐	☐
SYSTEM_SPECIFIC	6.5.2.1	Mechanical	Zone controls can limit reheating, recooling, simultaneous heating and cooling and sequence heating and cooling to each zone.	☐	☐	☐
SYSTEM_SPECIFIC	6.4.3.11.1	Mechanical	Electric motor driven chilled-water plants have measurement devices installed and measure the electricity use and efficiency	☐	☐	☐
SYSTEM_SPECIFIC	6.4.3.11.2	Mechanical	Electricity use and efficiency are trended every 15 minutes and graphically displayed, including hourly, daily, monthly, and annual data. Data are preserved for 36 months or more.	☐	☐	☐
SYSTEM_SPECIFIC	6.5.2.2.2	Mechanical	Two-pipe hydronic systems using a common distribution system have controls to allow a deadband >=15 ºF, allow operation in one mode for at least 4 hrs before changeover, and have rest controls to limit heating and cooling supply temperature to <=30 ºF.	☐	☐	☐
HVAC	6.5.2.4.1	Mechanical	Humidifiers with airstream mounted preheating jackets have preheat auto-shutoff value set to activate when humidification is not required.	☐	☐	☐
HVAC	6.5.2.4.2	Mechanical	Humidification system dispersion tube hot surfaces in the airstreams of ducts or air-handling units insulated >= R-0.5.	☐	☐	☐
HVAC	6.5.2.5	Mechanical	Preheat coils controlled to stop heat output whenever mechanical cooling, including economizer operation, is active.	☐	☐	☐
SYSTEM_SPECIFIC	6.5.3.2.2	Mechanical	VAV fans have static pressure sensors positioned so setpoint <=1.2 in. w.c. design pressure.	☐	☐	☐
SYSTEM_SPECIFIC	6.5.4.6	Mechanical	Chilled-water and condenser water piping sized according to design flow rate and total annual hours of operation (Table 6.5.4.6).	☐	☐	☐

SYSTEM_SPECIFIC	6.5.6.2	Mechanical	Condenser heat recovery system that can heat water to 85 ºF or provide 60% of peak heat rejection is installed for preheating of service hot water.	☐	☐	☐
HVAC	6.5.7.2.4	Mechanical	Approved field test used to evaluate design air flow rates and demonstrate proper capture and containment of kitchen exhaust systems.	☐	☐	☐
SYSTEM_SPECIFIC	6.5.9	Mechanical	Hot gas bypass limited to: <=240 kBtu/h – 15% >240 kBtu/h – 10%	☐	☐	☐
HVAC	6.4.3.9	Mechanical	Heating for vestibules and air curtains with integral heating include automatic controls that shut off the heating system when outdoor air temperatures > 45F. Vestibule heating and cooling systems controlled by a thermostat in the vestibule with heating setpoint <= 60F and cooling setpoint >= 80F.	☐	☐	☐
Controls	6.5.10	Mechanical	Doors separating conditioned space from the outdoors have controls that disable/reset heating and cooling system when open.	☐	☐	☐
Controls	9.4.1.1 except(g)	Interior Lighting	Automatic control requirements prescribed in Table 9.6.1, for the appropriate space type, are installed. Mandatory lighting controls (labeled as 'REQ') and optional choice controls (labeled as 'ADD1' and 'ADD2') are implemented.	☐	☐	☐
Controls	9.4.1.1 except(g)	Interior Lighting	Independent lighting controls installed per approved lighting plans and all manual controls readily accessible and visible to occupants.	☐	☐	☐
Controls	9.4.1.1f	Interior Lighting	Daylight areas under skylights and roof monitors that have more than 150 W combined input power for general lighting are controlled by photocontrols.	☐	☐	☐
Controls	9.4.1.4	Exterior Lighting	Automatic lighting controls for exterior lighting installed.	☐	☐	☐
Controls	9.4.1.3	Interior Lighting	Separate lighting control devices for specific uses installed per approved lighting plans.	☐	☐	☐
Wattage	9.6.2	Interior Lighting	Additional interior lighting power allowed for special functions per the approved lighting plans and is automatically controlled and separated from general lighting.	☐	☐	☐
Wattage	9.6.4	Interior Lighting	Where space LPD requirements are adjusted based on room cavity ratios, dimensions are consistent with approved plans.	☐	☐	☐
Insulation	4.2.4	Envelope	Installed roof insulation type and R-value consistent with insulation specifications reported in plans and COMcheck reports. For some ceiling systems, verification may need to occur during Framing Inspection.	☐	☐	☐
Insulation	5.8.1.2, 5.8.1.3	Envelope	Roof insulation installed per manufacturer's instructions. Blown or poured loose-fill insulation is installed only where the ceiling slope is <= 3:12.	☐	☐	☐
Insulation	5.8.1.1	Envelope	Building envelope insulation is labeled with R-value or insulation certificate has been provided listing R-value and other relevant data.	☐	☐	☐
Insulation	5.8.1.9	Envelope	Building envelope insulation extends over the full area of the component at the proposed rated R or U value.	☐	☐	☐
Insulation	5.8.1.4	Envelope	Eaves are baffled to deflect air to above the insulation.	☐	☐	☐
Insulation	5.8.1.5	Envelope	Insulation is installed in substantial contact with the inside surface separating conditioned space from unconditional space.	☐	☐	☐
Insulation	5.8.1.6	Envelope	Recessed equipment installed in building envelope assemblies does not compress the adjacent insulation.	☐	☐	☐
Insulation	5.8.1.7.1	Envelope	Attics and mechanical rooms have insulation protected where adjacent to attic or equipment access.	☐	☐	☐
Insulation	5.8.1.7.2	Envelope	Foundation vents do not interfere with insulation.	☐	☐	☐

Insulation	5.8.1.8	Envelope	Insulation intended to meet the roof insulation requirements cannot be installed on top of a suspended ceiling. Mark this requirement compliant if insulation is installed accordingly.	☐	☐	☐
SYSTEM_SPECIFIC	6.4.3.1.1	Mechanical	Heating and cooling to each zone is controlled by a thermostat control.	☐	☐	☐
HVAC	6.4.3.1.2	Mechanical	Thermostatic controls have a 5 °F deadband.	☐	☐	☐
HVAC	6.4.3.2	Mechanical	Temperature controls have setpoint overlap restrictions.	☐	☐	☐
HVAC	6.4.3.3.1	Mechanical	HVAC systems equipped with at least one automatic shutdown control.	☐	☐	☐
SYSTEM_SPECIFIC	6.4.3.5	Mechanical	Heat pump controls prevent supplemental electric resistance heat from coming on when not needed.	☐	☐	☐
SYSTEM_SPECIFIC	6.4.3.12	Mechanical	Air economizer has a fault detection and diagnostics (FDD) system (see details for configuration and operational requirements).	☐	☐	☐
HVAC	6.4.3.6	Mechanical	When humidification and dehumidification are provided to a zone, simultaneous operation is prohibited. Humidity control prohibits the use of fossil fuel or electricity to produce RH > 30% in the warmest zone humidified and RH < 60% in the coldest zone dehumidified.	☐	☐	☐
SYSTEM_SPECIFIC	7.4.4.3	Mechanical	Public lavatory faucet water temperature <=110°F.	☐	☐	☐
SYSTEM_SPECIFIC	7.4.4.4	Mechanical	Controls are installed that limit the operation of a recirculation pump installed to maintain temperature of a storage tank.	☐	☐	☐
SYSTEM_SPECIFIC	7.4.5.1	Mechanical	Pool heaters are equipped with on/off switch and no continuously burning pilot light.	☐	☐	☐
SYSTEM_SPECIFIC	7.4.5.2	Mechanical	Pool covers are provided for heated pools and pools heated to >90°F have a cover >=R-12.	☐	☐	☐
SYSTEM_SPECIFIC	7.4.5.3	Mechanical	Time switches are installed on all pool heaters and pumps.	☐	☐	☐
Wattage	9.2.2.3	Interior Lighting	Interior installed lamp and fixture lighting power is consistent with what is shown on the approved lighting plans, demonstrating proposed watts are less than or equal to allowed watts.	☐	☐	☐
SYSTEM_SPECIFIC	7.4.3	Mechanical	All piping in recirculating system insulated	☐	☐	☐
SYSTEM_SPECIFIC	7.4.3	Mechanical	First 8 ft of outlet piping in nonrecirculating storage system, or branch piping connected to recirculated, heat traced, or impredance heated piping is insulated.	☐	☐	☐
SYSTEM_SPECIFIC	7.4.3	Mechanical	All heat traced or externally heated piping insulated	☐	☐	☐
Wattage	9.4.4	Interior Lighting	At least 75% of all permanently installed lighting fixtures in dwelling units have >= 55 lm/W efficacy or a >= 45 lm/W total luminaire efficacy.	☐	☐	☐
4. To be checked by Inspector at Project Completion and Prior to Issuance of Certificate of Occupancy						
Plan Review	6.7.2.4	Mechanical	Detailed instructions for HVAC systems commissioning included on the plans or specifications for projects >=50,000 ft2.	☐	☐	☐
Plan Review	6.7.2.4	Mechanical	Detailed instructions for HVAC systems commissioning included on the plans or specifications for projects >=50,000 ft2.	☐	☐	☐
Post Construction	6.7.2.1	Mechanical	Furnished HVAC as-built drawings submitted within 90 days of system acceptance.	☐	☐	☐
Post Construction	6.7.2.2	Mechanical	Furnished O&M manuals for HVAC systems within 90 days of system acceptance.	☐	☐	☐
Post Construction	6.7.2.3	Mechanical	An air and/or hydronic system balancing report is provided for HVAC systems serving zones >5,000 ft2 of conditioned area.	☐	☐	☐

HVAC	6.7.2.4	Mechanical	HVAC control systems have been tested to ensure proper operation, calibration and adjustment of controls.	☐	☐	☐
Post Construction	8.7.1	Interior Lighting	Furnished as-built drawings for electric power systems within 30 days of system acceptance.	☐	☐	☐
Post Construction	8.7.2	Interior Lighting	Furnished O&M instructions for systems and equipment to the building owner or designated representative.	☐	☐	☐

Input Data Report

Project Information

Project Name: Magnolia Oaks **Project Title:** Magnolia Oaks

Address: 7240 & 7338 Massachusetts Ave **State:** FL **Zip:** 34653

Owner: Pasco County Housing Authority

Building Type: Office **Building Classification:** New Finished building

No.of Stories: 1 **GrossArea (SF):** 1,569

Bldg. Rotation: None

Zones

No	Acronym	Description	Type	Area [sf]	Multi	Total Area [sf]	
1	AHU-C-1	Zone 1	CONDITIONED	1569.0	1	1569.0	☐

Spaces

No	Acronym	Description	Type	Depth [ft]	Width [ft]	Height [ft]	Mult	Total Area [sf]	Total Vol[cf]	
In Zone:	**AHU-C-1**									
1	1 Gathering Roo	Zo0Sp1	Lobby (General) - Reception and Waiting	1.00	529.00	9.50	1	529.0	5025.5	☐
2	2 Fitness Room	Zo0Sp1	Unknown	1.00	301.00	10.00	1	301.0	3010.0	☐
3	3 Gathering Lobb	Zo0Sp1	Unknown	1.00	127.00	9.50	1	127.0	1206.5	☐
4	4 Office	Zo0Sp1	Unknown	1.00	128.00	9.50	1	128.0	1216.0	☐
5	5 Restroom	Zo0Sp1	Unknown	1.00	63.00	9.00	1	63.0	567.0	☐
6	6 Restroom	Zo0Sp1	Unknown	1.00	58.00	9.00	1	58.0	522.0	☐
7	7 Kitchen	Zo0Sp1	Unknown	1.00	155.00	9.00	1	155.0	1395.0	☐
8	8 Mechanical Ro	Zo0Sp1	Unknown	1.00	51.00	10.00	1	51.0	510.0	☐
9	9 Storage	Zo0Sp1	Unknown	1.00	50.00	9.00	1	50.0	450.0	☐
10	10 Office	Zo0Sp1	Unknown	1.00	107.00	9.50	1	107.0	1016.5	☐

Lighting

No	Type	Category	No. of Luminaires	Watts per Luminaire	Power [W]	Control Type	No.of Ctrl pts	
In Zone:	**AHU-C-1**							
In Space:	**1 Gathering Room**							
1	LED	General Lighting	7	15	105	Manual On/Off	1	☐
2	LED	General Lighting	2	2	4	Manual On/Off	1	☐
3	LED	General Lighting	2	100	200	Manual On/Off	1	☐
In Space:	**2 Fitness Room**							
1	LED	General Lighting	6	42	252	Manual On/Off	1	☐
2	LED	General Lighting	1	2	2	Manual On/Off	1	☐
In Space:	**3 Gathering Lobby**							
1	LED	General Lighting	3	42	126	Manual On/Off	1	☐
2	LED	General Lighting	1	2	2	Manual On/Off	1	☐
In Space:	**4 Office**							
1	LED	General Lighting	2	42	84	Manual On/Off	1	☐
In Space:	**5 Restroom**							
1	LED	General Lighting	1	24	24	Manual On/Off	1	☐
2	LED	General Lighting	3	15	45	Manual On/Off	1	☐
3	LED	General Lighting	1	2	2	Manual On/Off	1	☐
In Space:	**6 Restroom**							
1	LED	General Lighting	1	24	24	Manual On/Off	1	☐
2	LED	General Lighting	2	15	30	Manual On/Off	1	☐
3	LED	General Lighting	1	2	2	Manual On/Off	1	☐
In Space:	**7 Kitchen**							
1	LED	General Lighting	3	15	45	Manual On/Off	1	☐
2	LED	General Lighting	1	2	2	Manual On/Off	1	☐
3	LED	General Lighting	2	5	10	Manual On/Off	1	☐
In Space:	**8 Mechanical Room**							
1	LED	General Lighting	1	31	31	Manual On/Off	1	☐
2	LED	General Lighting	1	2	2	Manual On/Off	1	☐
In Space:	**9 Storage**							
1	LED	General Lighting	1	42	42	Manual On/Off	1	☐
In Space:	**10 Office**							
1	LED	General Lighting	2	42	84	Manual On/Off	1	☐

Walls (Walls will be rotated clockwise by building rotation value)

No	Description	Type	Width [ft]	H (Effec) [ft]	Multi plier	Area [sf]	Orient ation	Cond-uctance [Btu/h.sf.F]	Heat Capacity [Btu/sf.F]	Dens. [lb/cf]	R-Value [h.sf.F/Btu]
In Zone:	**AHU-C-1**										
1	Pr0Zo1Wa1	Wall	34.00	10.00	1	340.0	North	0.2000	2.890	24.90	5.0
2	Pr0Zo1Wa1	Wall	34.00	10.00	1	340.0	South	0.2000	2.890	24.90	5.0
3	Pr0Zo1Wa1	Wall	51.00	10.00	1	510.0	East	0.2000	2.890	24.90	5.0
4	Pr0Zo1Wa1	Wall	45.50	10.00	1	455.0	West	0.2000	2.890	24.90	5.0

Windows (Windows will be rotated clockwise by building rotation value)

No	Description	Orientation	Shaded	U [Btu/hr sf F]	SHGC	Vis.Tra	W [ft]	H (Effec) [ft]	Multi plier	Total Area [sf]
In Zone:	**AHU-C-1**									
In Wall:	**East**									
1	Pr0Zo1Wa3Wi1	East	Yes	0.5000	0.25	0.76	4.00	3.30	1	13.2
2	Pr0Zo1Wa3Wi2	East	Yes	0.5000	0.25	0.76	5.00	3.80	1	19.0
3	Pr0Zo1Wa3Wi1	East	Yes	0.5000	0.25	0.76	4.00	3.30	1	13.2
In Wall:	**North**									
1	Pr0Zo1Wa3Wi1	North	Yes	0.5000	0.25	0.76	4.00	3.30	1	13.2
2	Pr0Zo1Wa3Wi1	North	Yes	0.5000	0.25	0.76	4.00	3.30	1	13.2
3	Pr0Zo1Wa3Wi1	North	Yes	0.5000	0.25	0.76	4.00	3.30	1	13.2
In Wall:	**West**									
1	Pr0Zo1Wa3Wi1	West	Yes	0.5000	0.25	0.76	4.00	3.30	1	13.2
2	Pr0Zo1Wa3Wi1	West	Yes	0.5000	0.25	0.76	4.00	3.30	1	13.2
3	Pr0Zo1Wa3Wi1	West	Yes	0.5000	0.25	0.76	4.00	3.30	1	13.2
4	Pr0Zo1Wa3Wi1	West	Yes	0.5000	0.25	0.76	4.00	3.30	1	13.2
5	Pr0Zo1Wa3Wi2	West	Yes	0.5000	0.25	0.76	5.00	3.80	1	19.0

Doors

No	Description	Type	Shade?	Width [ft]	H (Effec) [ft]	Multi plier	Area [sf]	Cond. [Btu/h.sf.F]	Dens. [lb/cf]	Ht Cap. [Btu/sf. F]	R [h.sf.F/ Btu]
In Zone:											
In Wall:											

Roofs

No	Description	Type	Width [ft]	H (Effec) [ft]	Multi plier	Area [sf]	Tilt [deg]	Cond. [Btu/h.Sf. F]	Heat Cap [Btu/sf. F]	Dens. [lb/cf]	R-Value [h.sf.F/Btu
In Zone:	**AHU-C-1**										
1	Pr0Zo1Rf1	Roof	1569.00	1.00	1	1569.0	0.00	0.0500	2.89	24.90	20.0

Skylights

No	Description	Type	U [Btu/hr sf F]	SHGC	Vis.Trans	W [ft]	H (Effec) [ft]	Multi-plier	Area [Sf]	Total Area [Sf]
In Zone:										
In Roof:										

Floors

No	Description	Type	Width [ft]	H (Effec) [ft]	Multi plier	Area [sf]	Cond. [Btu/h.sf.F	Heat Cap. [Btu/sf. F]	Dens. [lb/cf]	R-Value [h.sf.F/Btu
In Zone:	**AHU-C-1**									
1	Pr0Zo1Fl1	1 ft. soil, concrete floor, carpet and rubber pad	1569.00	1.00	1	1569.0	0.2681	34.00	113.33	3.73

Systems

AHU-C-1	System 1	Constant Volume Air Cooled Split System < 65000 Btu/hr	No. Of Units 1

Component	Category	Capacity	Efficiency	IPLV	
1	Cooling System	46250.00	14.50	8.00	☐
2	Heating System	27294.00	1.00		☐
3	Air Handling System -Supply	1600.00	0.40		☐
4	Air Distribution System (Sup)		6.00		☐

Plant

Equipment	Category	Size	Inst.NoEff.	IPLV

Water Heaters

	W-Heater Description	Capacity	Cap.Unit	I/P Rt.	Efficiency	Loss	
1	Electric Storage water heater (1 units)	40	[Gal]	5 [kW]	0.9800 [Ef]	[Btu/h]	☐

Ext-Lighting

	Description	Category	No. of Lumin-aires	Watts per Lumin-aire	Area/Len/No [sf/ft/No]	Control Type	Wattage [W]	
1	Ext Light 1	Building facades by area	5	10	1170.00	Photo Sensor control	50.00	☐
2	Ext Light 2	Building facades by area	1	15	54.00	Photo Sensor control	15.00	☐

Piping

No	Type	Operating Temp [F]	Insulation Conductivity [Btu-in/h.sf.F]	Nomonal pipe Diameter [in]	Insulation Thickness [in]	Is Runout?
1	Heating System (Steam, Steam Condensate, & Hot Water)	105.00	0.28	0.25	1.00	No

Fenestration Used

Name	Glass Type	No. of Panes	Glass Conductance [Btu/h.sf.F]	SHGC	VLT
Window	User Defined	1	0.5000	0.2500	0.7600

Materials Used

Mat No	Acronym	Description	Only R-Value Used	RValue [h.sf.F/Btu]	Thick [ft]	Cond-uctivity [Btu/h.ft.F	Density [lb/cf]	Sp. Heat [Btu/lb.F]
178	Matl178	CARPET W/RUBBER PAD	Yes	1.2300				
265	Matl265	Soil, 1 ft	No	2.0000	1.0000	0.5000	100.00	0.2000
48	Matl48	6 in. Heavyweight concrete	No	0.5000	0.5000	1.0000	140.00	0.2000

Constructs Used

No	Name	Simple Construct	Massless Construct	Conductance [Btu/h.sf.F]	Heat Cap [Btu/sf.F]	Density [lb/cf]	RValue [h.sf.F/Btu]
1057	1 ft. soil, concrete floor, carpet and rubber pad	No	No	0.27	34.00	113.33	3.7

Layer	Material No.	Material	Thickness [ft]	Framing Factor
1	265	Soil, 1 ft	1.0000	0.000
2	48	6 in. Heavyweight concrete	0.5000	0.000
3	178	CARPET W/RUBBER PAD		0.000

No	Name	Simple Construct	Massless Construct	Conductance [Btu/h.sf.F]	Heat Cap [Btu/sf.F]	Density [lb/cf]	RValue [h.sf.F/Btu]
1060	Wall	Yes	No	0.20	2.89	24.90	5.0

No	Name	Simple Construct	Massless Construct	Conductance [Btu/h.sf.F]	Heat Cap [Btu/sf.F]	Density [lb/cf]	RValue [h.sf.F/Btu]
1061	Roof	Yes	No	0.05	2.89	24.90	20.0

Air Handler #1 - AHU-C-1 - Total Load Summary

Air Handler Description:	AHU-C-1 Constant Volume - Proportion
Supply Air Fan:	Draw-Thru with program estimated horsepower of 0.14 HP
Fan Input:	90% motor and fan efficiency with 0.5 in. water across the fan
Sensible Heat Ratio:	0.90

--- This system occurs 1 time(s) in the building. ---

Air System Peak Time:	5pm in August.
Outdoor Conditions:	Clg: 91° DB, 77° WB, 120.09 grains, Htg: 38° DB
Indoor Conditions:	Clg: 75° DB, 50% RH, Htg: 70° DB

Summer: Ventilation controls outside air, ----- Winter: Ventilation controls outside air.

Room Space sensible loss:	15,818	Btuh				
Infiltration sensible loss:	0	Btuh	0	CFM		
Outside Air sensible loss:	8,529	Btuh	250	CFM		
Supply Duct sensible loss:	0	Btuh				
Return Duct sensible loss:	0	Btuh				
Return Plenum sensible loss:	0	Btuh				
Total System sensible loss:					24,347	Btuh
Heating Supply Air: 15,818 / (1.000 X 1.08 X 25) =			586	CFM		
Winter Vent Outside Air (42.7% of supply) =			250	CFM		
Room space sensible gain:	34,129	Btuh				
Infiltration sensible gain:	0	Btuh				
Draw-thru fan sensible gain:	348	Btuh				
Supply duct sensible gain:	0	Btuh				
Reserve sensible gain:	0	Btuh				
Total sensible gain on supply side of coil:					34,477	Btuh
Cooling Supply Air: 34,477 / (1.000 X 1.1 X 20) =			1,568	CFM		
Summer Vent Outside Air (15.9% of supply) =			250	CFM		
Return duct sensible gain:	0	Btuh				
Return plenum sensible gain:	0	Btuh				
Outside air sensible gain:	4,398	Btuh	250	CFM		
Blow-thru fan sensible gain:	0	Btuh				
Total sensible gain on return side of coil:					4,398	Btuh
Total sensible gain on air handling system:					38,876	Btuh
Room space latent gain:	3,960	Btuh				
Infiltration latent gain:	0	Btuh				
Outside air latent gain:	8,995	Btuh				
Total latent gain on air handling system:					12,955	Btuh
Total system sensible and latent gain:					51,830	Btuh

Check Figures

Total Air Handler Supply Air (based on a 20° TD):	1,568	CFM
Total Air Handler Vent. Air (15.95% of Supply):	250	CFM
Total Conditioned Air Space:	1,569	Sq.ft
Supply Air Per Unit Area:	0.9992	CFM/Sq.ft
Area Per Cooling Capacity:	363.3	Sq.ft/Ton
Cooling Capacity Per Area:	0.0028	Tons/Sq.ft
Heating Capacity Per Area:	15.52	Btuh/Sq.ft
Total Heating Required With Outside Air:	24,347	Btuh
Total Cooling Required With Outside Air:	4.32	Tons

BID SET 08/05/2022

Building:	
System Tag/Name:	
Operating Condition Description:	**ASHRAE 62.1 OUTSIDE AIR CALCULATIONS**
Units (select from pull-down list)	**IP**

Inputs for System	**Name**	**Units**	w/o diversity **System**		**Diversity**	w/ diversity **System**
Floor area served by system	**As**	sf	1569			
Population of area served by system	***Ps***	P	18	*D*	90%	16
Design primary supply fan airflow rate	**Vpsd**	cfm	1,567	*D*	90%	1,410
OA req'd per unit area for system (Weighted average)	**Ras**	cfm/sf	0.11			
OA req'd per person for system area (Weighted average)	**Rps**	cfm/p	3.3			
Outdoor air intake provided for system	OA	cfm				

Inputs for Potentially Critical zones								
Zone Name				**Gathering Room**	***Fitness Room***	**Gathering Room Lobby**	**Office**	**Restroom**
	Zone title turns purple italic for critical zone(s)							
Zone Tag				**1**	**2**	**3**	**4**	**5**
Occupancy Category				**Multipurpose assembly**	**Gym, stadium (play area)**	**Lobbies**	**Office space**	**Occupiable storage rooms for dry materials**
		Select from pull-down list:						
Floor Area of zone	*Az*	sf		529	301	127	128	63
Design population of zone	*Pz*	P	(default value listed; may be overridden)	8	6	0	2	0
Design total supply to zone (primary plus local recirculated)	Vdzd	cfm		550	331	99	118	69
Induction Terminal Unit, Dual Fan Dual Duct or Transfer Fan?		Select from pull-down list or leave blank if N/A:						
Frac. of local recirc. air that is representative of system RA	*Er*							
Inputs for Operating Condition Analyzed								
Percent of total design airflow rate at conditioned analyzed	**Ds**	%	100%	100%	100%	100%	100%	100%
Air distribution type at conditioned analyzed		Select from pull-down list:		CS	CS	CS	CS	CS
Zone air distribution effectiveness at conditioned analyzed	*Ez*			1.00	1.00	1.00	1.00	1.00
Primary air fraction of supply air at conditioned analyzed	*Ep*							

Results of Minimum ASHRAE 62.1 Ventilation Rate Procedure (EQp1)			
System Ventilation Efficiency	*Ev*		**0.89**
Outdoor air intake required for system (EQp1)	*Vot*	cfm	**258**
Outdoor air per unit floor area	*Vot* /As	cfm/sf	**0.16**
Outdoor air per person served by system (including diversity)	*Vot* /Ps	cfm/p	**15.9**
Outdoor air as a % of design primary supply air	Ypd	%	**16%**

Results of 30% Increase beyond ASHRAE 62.1 Ventilation Rate Procedure (EQc2)			
System Ventilation Efficiency with 30% increase (EQc2)	*Evz30*		**0.86**
Outdoor air intake required for system with 30% increase (EQc2)	*Vot30*	cfm	**348**
Outdoor air per unit floor area for system with 30% increase (EQc2)	*Vot30* /As	cfm/sf	**0.22**
Outdoor air per person served by system (including diversity) (EQc2)	*Vot30* /Ps	cfm/p	**21.5**
Outdoor air as a % of design primary supply air (EQc2)	Ypd30	%	**22%**

08/05/2022

Building:	
System Tag/Name:	
Operating Condition Description:	**ASHRAE 62.1 OUTSIDE AIR CALCULATIONS**
Units (select from pull-down list)	**IP**

Inputs for System	**Name**	**Units**	w/o diversity **System**		**Diversity**	w/ diversity **System**
Floor area served by system	**As**	sf	1569			
Population of area served by system	***Ps***	P	18	*D*	90%	16
Design primary supply fan airflow rate	**Vpsd**	cfm	1,567	*D*	90%	1,410
OA req'd per unit area for system (Weighted average)	**Ras**	cfm/sf	0.11			
OA req'd per person for system area (Weighted average)	**Rps**	cfm/p	3.3			
Outdoor air intake provided for system	OA	cfm				

Inputs for Potentially Critical zones

Zone Name				**Restroom**	**Kitchen**	**Mechanical Room**	**Storage**	**Office**
	Zone title turns purple italic for critical zone(s)							
Zone Tag				**6**	**7**	**8**	**9**	**10**
Occupancy Category				**Occupiable storage rooms for dry materials**	**Kitchen (cooking)**	**Occupiable storage rooms for dry materials**	**Occupiable storage rooms for dry materials**	**Office space**
		Select from pull-down list:						
Floor Area of zone	*Az*	sf		58	155	51	50	107
Design population of zone	*Pz*	P	(default value listed; may be overridden)	0	0	0	0	2
Design total supply to zone (primary plus local recirculated)	Vdzd	cfm		33	87	32	99	149
Induction Terminal Unit, Dual Fan Dual Duct or Transfer Fan?		Select from pull-down list or leave blank if N/A:						
Frac. of local recirc. air that is representative of system RA	*Er*							

Inputs for Operating Condition Analyzed

Percent of total design airflow rate at conditioned analyzed	**Ds**	%	100%	100%	100%	100%	100%	100%
Air distribution type at conditioned analyzed		Select from pull-down list:		CS	CS	CS	CS	CS
Zone air distribution effectiveness at conditioned analyzed	*Ez*			1.00	1.00	1.00	1.00	1.00
Primary air fraction of supply air at conditioned analyzed	*Ep*							

Results of Minimum ASHRAE 62.1 Ventilation Rate Procedure (EQp1)

System Ventilation Efficiency	*Ev*		**0.89**
Outdoor air intake required for system (EQp1)	*Vot*	cfm	**258**
Outdoor air per unit floor area	*Vot* /As	cfm/sf	**0.16**
Outdoor air per person served by system (including diversity)	*Vot* /Ps	cfm/p	**15.9**
Outdoor air as a % of design primary supply air	Ypd	%	**16%**

Results of 30% Increase beyond ASHRAE 62.1 Ventilation Rate Procedure (EQc2)

System Ventilation Efficiency with 30% increase (EQc2)	*Evz30*		**0.86**
Outdoor air intake required for system with 30% increase (EQc2)	*Vot30*	cfm	**348**
Outdoor air per unit floor area for system with 30% increase (EQc2)	*Vot30* /As	cfm/sf	**0.22**
Outdoor air per person served by system (including diversity) (EQc2)	*Vot30* /Ps	cfm/p	**21.5**
Outdoor air as a % of design primary supply air (EQc2)	Ypd30	%	**22%**

08/05/2022

Permission to Occupy Project Mortgages

U.S. Department of Housing and Urban Development
Office of Housing
Federal Housing Commissioner

OMB Approval No. 2502-0029
(Exp. 04/30/2020)

Public Reporting Burden for this collection of information is estimated to average 4 hours per response, including the time for reviewing instructions, searching existing data sources, gathering and maintaining the data needed, and completing and reviewing the collection of information. This agency may not conduct or sponsor, and a person is not required to respond to, a collection of information unless that collection displays a valid OMB control number.

This information is being collected under Public Law 101-625 which requires the Department of to implement a system for mortgage insurance for mortgages insured under Sections 207,221,223,232, or 241 of the National Housing Act. The information will be used by HUD to approve rents, property appraisals, and mortgage amounts, and to execute a firm commitment. Confidentiality to respondents is ensured if it would result in competitive harm in accord with the Freedom of Information Act (FOIA) provisions or if it could impact on the ability of the Department's mission to provide housing units under the various Sections of the Housing legislation.

Project Name	Project Number
Project Location	Request Number

Request for Permission to Occupy
Federal Housing Administration

Permission is requested for the occupancy of (Number) _____ living units identified as

and located in (Describe structure, wing, entrance, etc.)

All work in connection therewith has been substantially completed and all of the above-described living units are suitable for occupancy, with the fixtures and equipment installed and in operating condition. Light, heat, water, gas, and sanitary services have been connected and are available for use. The premises have been inspected by the public authorities have jurisdiction and permission to occupy granted by them as evidenced by the certificates attached hereto. Safe and adequate approaches to the site and the aforesaid living units have been provided, including temporary or permanent guard rails, barricades, walks, lights, and other provisions necessary to the protection of tenants and the public. Proposed rental schedules or monthly charges in triplicate and mortgagor's proposal for management of the project and compensation to be paid therefor, if and as requested by corporate charter have been or are herewith submitted.

_____
Mortgagor

Date (mm/dd/yyyy) _____ By _____

Architect's Certificate of Substantial Completion

I have inspected the units listed above and have found construction to be sufficiently complete and in accordance with contract requirements so that owner may occupy the above described living or service units for the uses intended. I have examined all required certificates of permission to occupy as issued by public authorities having jurisdiction and found same to be in proper order.

_____
Architect

Date (mm/dd/yyyy) _____ By _____

Contractor's Certification

This is to certify that all work or correction necessary to complete the above-described living units in accordance with the contract requirements and in a manner acceptable to the Federal Housing Administration will be performed without delay and at no additional cost regardless of any adverse conditions resulting from the occupancy of the aforesaid living units.

_____
Contractor

Date (mm/dd/yyyy) _____ By _____

Mortgagee's Statement
Federal Housing Administration

All insurance risks have been covered in conformity with Federal Housing Administration Hazard Insurance requirements issued in connection with this project. The above request is acceptable to the undersigned.

_____
Mortgagee

Date (mm/dd/yyyy) _____ By _____

To (Name of Mortgagee, Street Address, City, State, Zip):

FHA Inspection Report

Examination of the living units described above, including the available means of access thereto, reveals they are suitable for occupancy with the exception of those enumerated below, which are considered unsuitable for occupancy at this time for the reasons stated.

Inspected _____ By _____
(Date mm/dd/yyyy) ☐ Architectural ☐ Construction Representative

Approved ☐ as reported above; ☐ as modified by me _____
☐ Chief Architecture & Engineering Section ☐ Deputy

Approved: Date _____ By _____
(mm/dd/yyyy) ☐ Chief Underwriter; ☐ Assistant Director for Technical Services ☐ Deputy

Permission to Occupy

Permission is granted for the occupancy of the living units identified on the FHA Inspection Report portion of this form as suitable for occupancy. It is understood that this does not constitute and shall not be construed as acceptable of construction and that completion of these living units in accordance with the contract documents is essential and will be performed prior to acceptance of the construction.

Federal Housing Administration,

By _____
(Authorized agent)

Date (mm/dd/yyyy) _____

HUD Project #067-35592

SPECIFICATIONS

PASCO COUNTY HOUSING AUTHORITY
"MAGNOLIA OAKS"
7240 & 7338 Massachusetts Ave.
New Port Richey, Florida

Volume 1: ARCHITECTURAL, STRUCTURAL & MEP_FP

ARCHITECT	OWNER	G.C.	LENDER	BONDING CO.
GOODWYN, MILL & CAWOOD, INC.	PASCO COUNTY HOUSING AUTHORITY		ADROC CAPITAL	
SIGNATURE:	SIGNATURE:	SIGNATURE:	SIGNATURE:	SIGNATURE:
TTILE:	TITLE:	TITLE:	TITLE:	TITLE:
DATE:	DATE:	DATE:	DATE:	DATE:

Goodwyn Mills Cawood, LLC.
201 North Franklin Street, Suite 250
Tampa, FL 33602
813.678.2420