DRD2763A

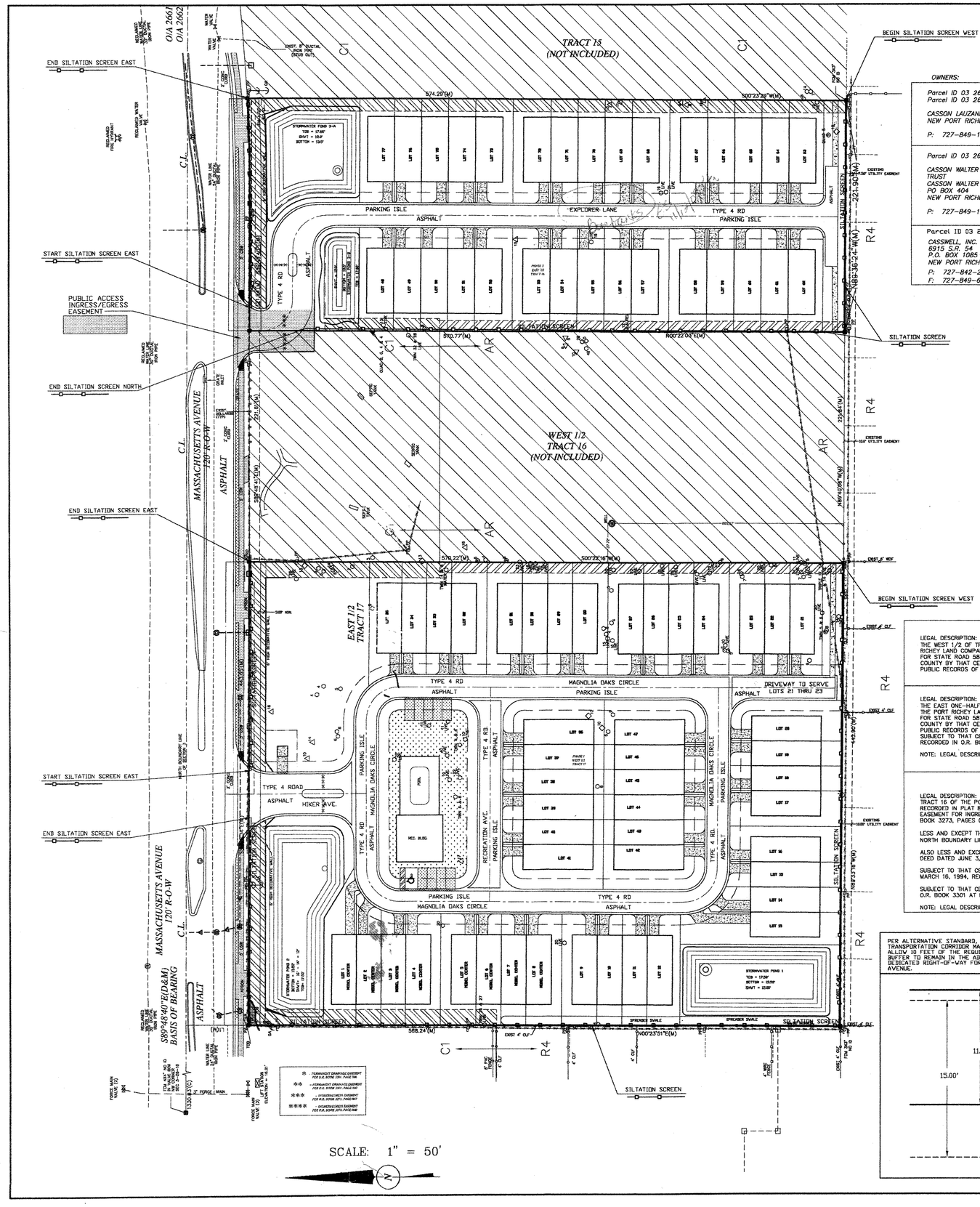


LEGEND:
A/C = AIR CONDITIONER, BFP = BACK FLOW PREVENTOR, BSL = BUILDING SETBACK LINE, (C) = CALCULATED, C# = CURVE NUMBER (SEE CURVE TABLE), CB = CABLE BOX, CLP = CONCRETE LIGHT POLE, C/S = CONCRETE SLAB, CLF = CHAIN LINK FENCE, CI = CURB INLET, CONC = CONCRETE, CSW = CONCRETE SIDEWALK, (D) = DEED, DE = DRAINAGE EASEMENT, DMH = DRAINAGE MANHOLE, EB = ELECTRIC BOX, EOL = EDGE OF LIMEROCK, EOW = EDGE OF WATER, E/P = EDGE OF PAVEMENT, (F) = FIELD, F/C = FENCE CORNER, FCC = FOUND CROSS CUT, FCM = FOUND CONCRETE MONUMENT, FFE = FINISHED FLOOR ELEVATION, FIP = FOUND IRON PIPE, FIR = FOUND IRON ROD, FN = FOUND NAIL, FND = FOUND NAIL AND DISK, FPC = FLORIDA POWER CORPORATION, GA = GUY ANCHOR, GI = GRATE INLET, ID = IDENTIFICATION, IE = INGRESS & EGRESS EASEMENT, INV = INVERT, LB = LICENSED BUSINESS, LP = LIGHT POLE, (M) = MEASURED, MH = MANHOLE, MP = METER POLE, OHW = OVERHEAD WIRE, O/A = OVER ALL, (P) = PLAT, PC = POINT OF CURVATURE, PCP = PERMANENT CONTROL POINT, PI = POINT OF INTERSECTION, PP = POWER POLE, POB = POINT OF BEGINNING, POC = POINT OF COMMENCEMENT, PRC = POINT OF REVERSE CURVE, PRM = PERMANENT REFERENCE MONUMENT, PT = POINT OF TANGENT, PSM = PROFESSIONAL SURVEYOR AND MAPPER, R/W = RIGHT OF WAY, SIR = SET 5/8" IRON ROD LB 7079, SMH = SANITARY MANHOLE, SND = SET NAIL AND DISK LB 7079, TNF = TRANSFORMER, TOB = TOP OF BANK, TP = TELEPHONE PEDESTAL, UE = UTILITY EASEMENT, WB = WATER BOX, WDF = WOOD FENCE, VA = VALVE, WV = WATER VALVE

OWNERS:

Parcel ID 03 26 16 0070 01700 0020
Parcel ID 03 26 16 0070 01700 0030

CASSON LAUZANNE S TRUSTEE PO BOX 404
NEW PORT RICHEY FL 34656-0404

P: 727-849-1911

Parcel ID 03 26 16 0070 01700 0010

CASSON WALTER A JR REVOCABLE FAMILY TRUST
CASSON WALTER A JR TRUSTEE
PO BOX 404
NEW PORT RICHEY FL 34656-0404

P: 727-849-1911

Parcel ID 03 26 16 0070 01600 0010

CASSWELL, INC.
6915 S.R. 54
P.O. BOX 1085
NEW PORT RICHEY, FL 34656

P: 727-842-2571
F: 727-849-6727

DEVELOPER:
CASSWELL, INC.
6915 S.R. 54
P.O. BOX 1085
NEW PORT RICHEY, FL 34656
P: 727-842-2571
F: 727-849-6727

ENGINEER:
GALEN J. HOFMANN
8620 AIRWAY BLVD.
NEW PORT RICHEY, FL 34654
P: 727-844-7686
F: 727-844-7626

SURVEYOR:
SMITH AND WOMACK LAND SURVEYING, INC.
PROFESSIONAL SURVEYORS & MAPPERS, LB #7079
5425 MAIN STREET
NEW PORT RICHEY, FL 34652
P: 727-843-9435
F: 727-843-9436

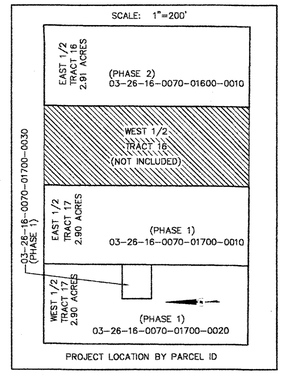


EXISTING AND PROPOSED GRADES BASED ON THE NATIONAL GEODETIC VERTICAL DATUM OF 1929.

NOTICE
Development Permits issued by Pasco County do not waive requirements for obtaining any other permits required by any other agency. DO NOT rely solely upon this document.

NOTICE
All Construction within County R/W requires a R/W use permit from the Pasco County Development Division. Please reference Ordinance 84-14.

SITE LOCATION

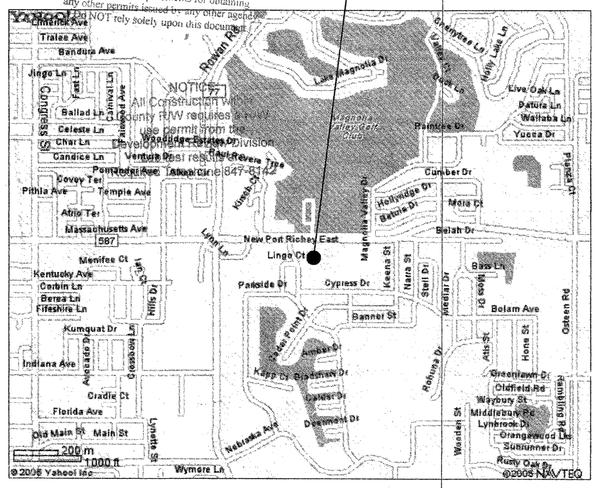


NOTICE
CALL ENGINEERING DEPARTMENT FOR FINAL SITE INSPECTION PRIOR TO C/O ISSUANCE
TELEPHONE (727) 834-3670

PROJECT'S PROPOSED DRAINAGE PLAN WAS BASED ON THE EXISTING FIELD CONDITIONS OF THE ABUTTING PROPERTIES.

LEGAL DESCRIPTION:
THE WEST 1/2 OF TRACT 17 IN SECTION 3, TOWNSHIP 26 SOUTH, RANGE 16 EAST, ACCORDING TO THE PLAT OF THE PORT RICHEY LAND COMPANY, PLAT BOOK 1, PAGE 81, PASCO COUNTY, FLORIDA; LESS AND EXCEPT EXISTING ROAD RIGHT-OF-WAY FOR STATE ROAD 587 ALONG THE NORTH BOUNDARY THEREOF WHICH INCLUDES PROPERTY WHICH WAS CONVEYED TO PASCO COUNTY BY THAT CERTAIN WARRANTY DEED DATED JUNE 3, 1994, RECORDED IN O.R. BOOK 3302, PAGES 1381-1382 OF THE PUBLIC RECORDS OF PASCO COUNTY, FLORIDA.

*WEST 1/2 TRACT 17 2.90 ACRES*

LEGAL DESCRIPTION:
THE EAST ONE-HALF (E 1/2) OF TRACT 17 IN SECTION 3, TOWNSHIP 26 SOUTH, RANGE 16 EAST, ACCORDING TO THE PLAT OF THE PORT RICHEY LAND COMPANY, PLAT BOOK 1, PAGE 81, PASCO COUNTY, FLORIDA; LESS AND EXCEPT EXISTING RIGHT-OF-WAY FOR STATE ROAD 587 ALONG THE NORTH BOUNDARY THEREOF WHICH INCLUDES PROPERTY WHICH WAS CONVEYED TO PASCO COUNTY BY THAT CERTAIN WARRANTY DEED DATED JUNE 3, 1994, RECORDED IN O.R. BOOK 3301, PAGES 1891-1893 OF THE PUBLIC RECORDS OF PASCO COUNTY, FLORIDA.
SUBJECT TO THAT CERTAIN DRAINAGE EASEMENT GRANTED TO PASCO COUNTY BY THAT CERTAIN EASEMENT DATED JUNE 3, 1994, RECORDED IN O.R. BOOK 3301, PAGES 1894-1896 OF THE PUBLIC RECORDS OF PASCO COUNTY, FLORIDA.

NOTE: LEGAL DESCRIPTION PER O.R. BOOK 4316, PAGE 1527.

*EAST 1/2 TRACT 17 2.90 ACRES*

LEGAL DESCRIPTION:
TRACT 16 OF THE PORT RICHEY LAND COMPANY SUBDIVISION OF SECTION 3, TOWNSHIP 26 SOUTH, RANGE 16 EAST, AS SHOWN ON THE PLAT RECORDED IN PLAT BOOK 1, PAGES 80 & 81 OF THE PUBLIC RECORDS OF PASCO COUNTY, FLORIDA; TOGETHER WITH THAT CERTAIN PERPETUAL EASEMENT FOR INGRESS AND EGRESS GRANTED BY GABRIELLA BANKS BY THAT CERTAIN EASEMENT DATED MARCH 16, 1994, RECORDED IN O.R. BOOK 3273, PAGES 0940-0943, INCLUSIVE OF THE PUBLIC RECORDS OF PASCO COUNTY, FLORIDA.

LESS AND EXCEPT THE WEST 1/2 OF SAID TRACT 16, ALSO LESS AND EXCEPT THAT PORTION OF SAID TRACT 16 LYING WITHIN 40 FEET OF THE NORTH BOUNDARY LINE OF SAID SECTION 3 FOR COUNTY ROAD 587 (MOON LAKE ROAD) RIGHT-OF-WAY.

ALSO LESS AND EXCEPT THAT PORTION OF THE FOREGOING PROPERTY WHICH WAS CONVEYED TO PASCO COUNTY BY THAT CERTAIN WARRANTY DEED DATED JUNE 3, 1993, RECORDED IN O.R. BOOK 3301, PAGES 1886-1887 OF THE PUBLIC RECORDS OF PASCO COUNTY, FLORIDA.

SUBJECT TO THAT CERTAIN PERPETUAL EASEMENT FOR INGRESS & EGRESS GRANTED TO GABRIELLA BANKS BY THAT CERTAIN EASEMENT DATED MARCH 16, 1994, RECORDED IN O.R. BOOK 3273 AT PAGES 0944-0947, INCLUSIVE OF THE PUBLIC RECORDS OF PASCO COUNTY, FLORIDA.

SUBJECT TO THAT CERTAIN DRAINAGE EASEMENT GRANTED TO PASCO COUNTY BY THAT CERTAIN EASEMENT DATED JUNE 3, 1994, RECORDED IN O.R. BOOK 3301 AT PAGES 1888-1890 OF THE PUBLIC RECORDS OF PASCO COUNTY, FLORIDA.

NOTE: LEGAL DESCRIPTION PER O.R. BOOK 4316, PAGE 1518.

PER ALTERNATIVE STANDARD, SECTION 319, TRANSPORTATION CORRIDOR MANAGEMENT, TO ALLOW 10 FEET OF THE REQUIRED LANDSCAPE BUFFER TO REMAIN IN THE ADDITIONAL DEDICATED RIGHT-OF-WAY FOR MASSACHUSETTS AVENUE.

TYPICAL FUTURE R/O/W & TYPE 'D' LANDSCAPE BUFFER DETAIL
N.T.S.

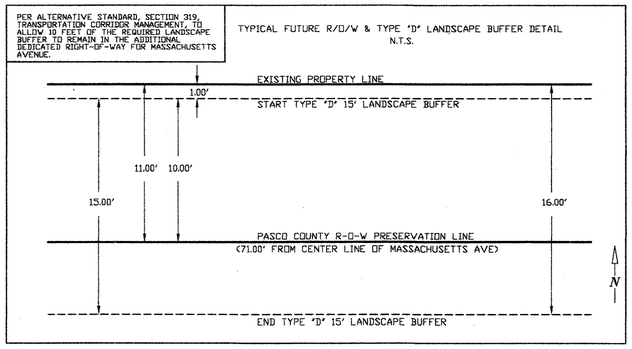


PRESENT AND PAST ZONING INFO:

03-26-16-0070-01700-0010
ZONED PUD

Petition RZ6514
Action APP W/CONDS
Date February 2006
Applicant MAGNOLIA OAKS PUD
Request C1 TO PUD

Petition RZ2
Action APP
Date 06/27/76
Applicant CASSON
Request AR TO MF1

Petition RZ4050
Action APP W/ CONDS
Date 12/20/88
Applicant CASSON
Request AR, MF1 TO C1

03-26-16-0070-01700-0020
ZONED PUD

Petition RZ6514
Action APP W/CONDS
Date February 2006
Applicant MEADOW OAKS PUD
Request C1 TO PUD

Petition RZ4050
Action APP W/ CONDS
Date 12/20/88
Applicant CASSON
Request AR, MF1 TO C1

03-26-16-0070-01700-0030
ZONED PUD

Petition RZ6514
Action APP W/CONDS
Date February 2006
Applicant MEADOW OAKS PUD
Request C1 TO PUD

Petition RZ4050
Action APP W/ CONDS
Date 12/20/88
Applicant CASSON
Request AR, MF1 TO C1

03-26-16-0070-01600-0010
ZONED PUD

Petition RZ6514
Action APP W/CONDS
Date February 2006
Applicant MAGNOLIA OAKS PUD
Request C1 TO PUD

Petition RZ9
Action DENY C2 - APP C1
Date 07/27/76
Applicant NESZERY
Request AR TO C2

(PHASE 1)
03-26-16-0070-01700-0010
03-26-16-0070-01700-0020
03-26-16-0070-01700-0030

(PHASE 2)
03-26-16-0070-01600-0010

APPROVED
Pasco County Development
Date 5/19/08
Approval does not relieve the Applicant of the Applicable Provisions of the Pasco County Land Development Regulations or Their Intent

RECEIVED
MAY 0 6 2008
PASCO COUNTY
DEVELOPMENT REVIEW

| | | |
|---|---|---|
| COVER SHEET | | SHEET 1 |
| EXISTING SITE / DEMOLITION | PLAN | SHEET 2 |
| OVERALL TRACT PLAN | | SHEET 2-A |
| COORDINATE GEOMETRY PLAN | (ENTIRE SITE) | SHEET 3 |
| COORDINATE GEOMETRY PLAN | (PHASE 1) | SHEET 4 |
| COORDINATE GEOMETRY PLAN | (PHASE 2) | SHEET 5 |
| TYPICAL LOT AND BUILDING | DETAILS | SHEET 5-A |
| LOT DIMENSION PLAN (PHASE 1) | | SHEET 6 |
| LOT DIMENSION PLAN (PHASE 1) | | SHEET 7 |
| SITE INFORMATION AND NOTES | | SHEET 8 |
| TRAFFIC SIGNING & MARKING | PLANS | SHEET 9 |
| PROPOSED GRADING PLAN (PHASE 1) | | SHEET 10 |
| PROPOSED GRADING PLAN (PHASE 2) | | SHEET 11 |
| PROPOSED STORMWATER DRAINAGE PLAN (PHASE 1) | | SHEET 12 |
| PROPOSED STORMWATER DRAINAGE PLAN (PHASE 2) | | SHEET 13 |
| CONTROL STRUCTURE DETAILS | | SHEET 13-A |
| BASIN AREA PLAN | | SHEET 14 |
| PRE-DEVELOPED BASIN PLAN | | SHEET 15 |
| POST-DEVELOPED BASIN PLAN | | SHEET 16 |
| POTABLE WATER & SANITARY | SEWER PLAN (PHASE 1) | SHEET 17 |
| POTABLE WATER & SANITARY | SEWER PLAN (PHASE 2) | SHEET 18 |
| OFF-SITE UTILITIES (EAST TO | KEENA ST) | SHEET 18-A |
| PROFILES | | SHEET 19 |
| PAVING AND GRADING DETAILS | | SHEET 20 |
| STORMWATER DETAILS | | SHEET 21 |
| F.D.O.T. DETAILS | | SHEET 22 |
| UTILITY DETAILS (WATER) | | SHEET 23 |
| UTILITY DETAILS (WASTE WATER) | | SHEET 24 |
| MISCELLANEOUS DETAILS | | SHEET 25 |
| PUMP STATION DETAILS | | SHEET 26 |
| PUMP STATION DETAILS | | SHEET 27 |
| PUMP STATION DETAILS | | SHEET 28 |
| | ATTACHED | |
| CONSTRUCTION OF SURFACE | WATER MANAGEMENT PLAN | (2 SHEETS) |
| | LANDSCAPE PLANS | |
| CONSTRUCTION | PLAN SUBMITTAL | |

COVER SHEET
SHEET 1 OF 28

MAGNOLIA OAKS
7240 MASSACHUSETTS AVE.
NEW PORT RICHEY, FL 34653

| REV | DATE | DESCRIPTION |
|---|---|---|
| 02 | 8/14/06 | PER SWFWMD |
| 01 | 7/24/06 | PER PASCO COUNTY & SWFWMD |
| 00 | 5/08/06 | INITIAL SUBMITTAL |

SUBMITTAL DATE:

SCALE: 1" = 50.00'


GALEN JAY HOFMANN , P. E.
8620 AIRWAY BLVD.
NEW PORT RICHEY, FL 34654
P: 727-844-7686
F: 727-844-7626


GALEN J. HOFMANN P.E.
CONSULTING CIVIL ENGINEER
GALEN J. HOFMANN , P.E. # 31795
NOT VALID UNLESS EMBOSSED WITH A RAISED SEAL

# SECTION 3, TOWNSHIP 26 SOUTH, RANGE 16 EAST

LEGAL DESCRIPTION:
TRACT 17 AND THE EAST 1/2 OF TRACT 16, PORT RICHEY LAND COMPANY SUBDIVISION, ACCORDING TO THE PLAT THEREOF AS RECORDED IN PLAT BOOK 1, PAGES 60 & 61 OF THE PUBLIC RECORDS OF PASCO COUNTY, FLORIDA.

CERTIFIED TO:
CASSWELL, INC., A FLORIDA CORPORATION
RICHEAR C. WILLIAMS, JR., P.A.
ATTORNEYS TITLE INSURANCE FUND, INC.

BASIS OF BEARING IS BASED ON THE NORTH BOUNDARY LINE OF SECTION 3, TOWNSHIP 26 SOUTH, RANGE 16 EAST.

NOTE:
ELEVATIONS ARE SHOWN AS SUCH × 16.2' AND ARE BASED ON THE NATIONAL GEODETIC VERTICAL DATUM OF 1929 AS ESTABLISHED FROM POLARIS BENCH MARK # Z-63339, FOUND NAIL & DISK EAST SIDE OF KEENA STREET 400.00'± SOUTH OF MASSACHUSETTS AVENUE, ELEVATION = 22.03'

*= PERMANENT DRAINAGE EASEMENT PER O.R. BOOK 3301, PAGE 1896

** = PERMANENT DRAINAGE EASEMENT PER O.R. BOOK 3301, PAGE 1890

*** = INGRESS/EGRESS EASEMENT PER O.R. BOOK 3273, PAGE 0947

**** = INGRESS/EGRESS EASEMENT PER O.R. BOOK 3273, PAGE 0940

Ⓓ = DRAINAGE MAN HOLE
Ⓖ = GTE MAN HOLE
Ⓡ = RECLAIMED WATER MAN HOLE

TREE LEGEND (SIZES ARE NOTED IN INCHES)

- ○ = CRAPE MYRTLE
- ▷ = CHERRY LAUREL
- ○ = OAK
- ▽ = CEDAR
- △ = PINE
- ◇ = PALM
- ◁ = CHINA BERRY
- ○ = ELF EAR
- ⑦ = UNKNOWN
- ◇ = CAMPHOR
- ● = MULBERRY
- ▶ = GOLDEN RAIN
- ◀ = RAIN TREE
- ⊗ = TREES TO BE REMOVED

DRAINAGE MAN HOLE RIM ELEVATIONS WITH INVERTS:

DMH #1: RIM = 15.44'

DMH #2: RIM = 15.51'
N = 10.42'
E = 10.59'

DMH #3: RIM = 14.85'
W = 11.06'

DMH #4: RIM = 14.92'

DMH #5: RIM = 17.01'
N = 10.02'
NE = 9.79'

DMH #6: RIM = 17.08'
SW = 9.96'
E = 9.88'

DMH #7: RIM = 15.55'
BOTTOM OF BOX = 7.70'
UNABLE TO GET INVERTS DUE TO BOX BEING FULL OF WATER

GRATE INET ELEVATIONS WITH INVERTS:

INLET #1 = 14.26'
N = 12.11'
E = 12.15'

INLET #2 = 14.13'
W = 14.15'

INLET #3 = 15.89'
E = 13.86'

INLET #4 = 15.66'
W = 13.42'
N = 13.29'

INLET #5 = 15.85'
E = 13.63'
W = 13.65'

INLET #6 = 14.46'
E = 13.06'
N = 13.11'

INLET #7 = 14.75'
S = 13.31'
W = 13.20'

TBM NOTE:

TBM #1: FIR 5/8" LB 7079 TRAVERSE POINT ADJACENT THE NORTHWEST PROPERTY CORNER OF TRACT 17, ELEVATION = 15.65'

TBM #2: FCM 3X3" NO ID, SOUTHEAST PROPERTY CORNER OF TRACT 17, ELEVATION = 18.88'

TBM #3: SET 60D NAIL IN 11" PINE TREE ON EAST PROPERTY LINE OF TRACT 16 APPROXIMATELY 300.00' SOUTH OF THE NORTHEAST CORNER OF TRACT 16, ELEVATION = 17.87'

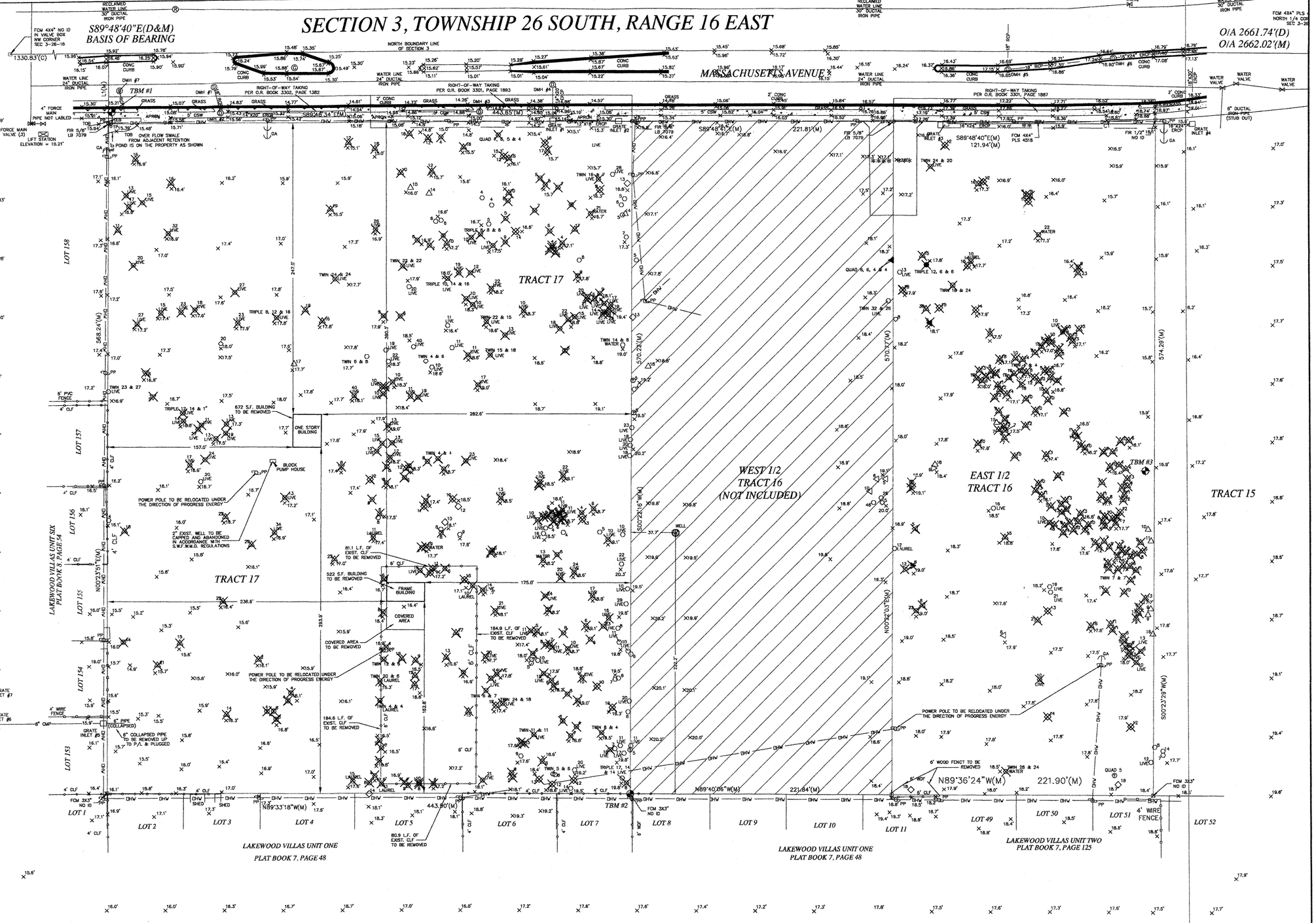


| LINE TABLE | | |
|---|---|---|
| LINE | LENGTH | BEARING |
| L1(M) | 60.00 | N00°23'53"E |

| CURVE TABLE | | | | | | |
|---|---|---|---|---|---|---|
| CURVE | TANGENT | LENGTH | RADIUS | DELTA | CHORD | CHORD BEARING |
| C1(M) | 50.00 | 99.97 | 1687.00 | 3°23'43" | 99.95 | N88°46'50"E |

NOTES: (1) THIS SURVEY WAS PERFORMED WITHOUT THE BENEFIT OF A TITLE COMMITMENT. (2) IN COMPLIANCE WITH F.A.C. 61G17-6.0031-4-E, IF LOCATION OF EASEMENTS OR RIGHTS-OF-WAY OF RECORD, OTHER THAN THOSE ON RECORD PLATS, IS REQUIRED, THIS INFORMATION MUST BE FURNISHED TO THE SURVEYOR AND MAPPER. (3) IF APPLICABLE, FENCES SHOWN MEANDER ON OR OFF LINES. (APPROX.) (4) NO EXCAVATION OR MAPPING OF UNDERGROUND IMPROVEMENTS HAS BEEN PERFORMED. (5) BASIS OF BEARING IS BASED ON PLAT UNLESS SHOWN OTHERWISE.

LEGEND:
A/C = AIR CONDITIONER, BFP = BACK FLOW PREVENTOR, BSL = BUILDING SETBACK LINE, (C) = CALCULATED, C# = CURVE NUMBER (SEE CURVE TABLE), CB = CABLE BOX, CLP = CONCRETE LIGHT POLE, C/S = CONCRETE SLAB, CLF = CHAIN LINK FENCE, CI = CURB INLET, CONC = CONCRETE, CSW = CONCRETE SIDEWALK, (D) = DEED, DE = DRAINAGE EASEMENT, DMH = DRAINAGE MANHOLE, EB = ELECTRIC BOX, EOL = EDGE OF LIMEROCK, EOW = EDGE OF WATER, E/P = EDGE OF PAVEMENT, (F) = FIELD, F/C = FENCE CORNER, FCC = FOUND CROSS CUT, FCM = FOUND CONCRETE MONUMENT, FFE = FINISHED FLOOR ELEVATION, FIP = FOUND IRON PIPE, FIR = FOUND IRON ROD, FN = FOUND NAIL, FND = FOUND NAIL AND DISK, FPC = FLORIDA POWER CORPORATION, GA = GUY ANCHOR, GI = GRATE INLET, ID = IDENTIFICATION, IE = INGRESS & EGRESS EASEMENT, INV = INVERT, LB = LICENSED BUSINESS, LP = LIGHT POLE, (M) = MEASURED, MH = MANHOLE, MP = METER POLE, OHW = OVERHEAD WIRE, O/A = OVER ALL, (P) = PLAT, PC = POINT OF CURVATURE, PCP = PERMANENT CONTROL POINT, PI = POINT OF INTERSECTION, PP = POWER POLE, POB = POINT OF BEGINNING, POC = POINT OF COMMENCEMENT, PRC = POINT OF REVERSE CURVE, PRM = PERMANENT REFERENCE MONUMENT, PT = POINT OF TANGENT, PSM = PROFESSIONAL SURVEYOR AND MAPPER, R/W = RIGHT OF WAY, SIR = SET 5/8" IRON ROD LB 7079, SMH = SANITARY MANHOLE, SND = SET NAIL AND DISK LB 7079, TNF = TRANSFORMER, TOB = TOP OF BANK, TP = TELEPHONE PEDESTAL, UE = UTILITY EASEMENT, WB = WATER BOX, WDF = WOOD FENCE, VA = VALVE, WV = WATER VALVE

PRELIMINARY & CONSTRUCTION PLAN SIMULTANEOUS SUBMITTAL

EXISTING SITE / DEMOLITION PLAN
SHEET 2 OF 28

MAGNOLIA OAKS
7240 MASSACHUSETTS AVE.
NEW PORT RICHEY, FL 34653

SUBMITTAL DATE:

| REV | DATE | DESCRIPTION |
|---|---|---|
| 00 | 5/09/06 | INITIAL SUBMITTAL |

SCALE: 1" = 50.00'


GALEN JAY HOFMANN , P. E.
8620 AIRWAY BLVD.
NEW PORT RICHEY, FL 34654
P: 727-844-7686
F: 727-844-7686

GALEN J. HOFMANN P.E.
CONSULTING CIVIL ENGINEER
GALEN J. HOFMANN , P.E. # 21795
NOT VALID UNLESS EMBOSSED WITH A RAISED SEAL

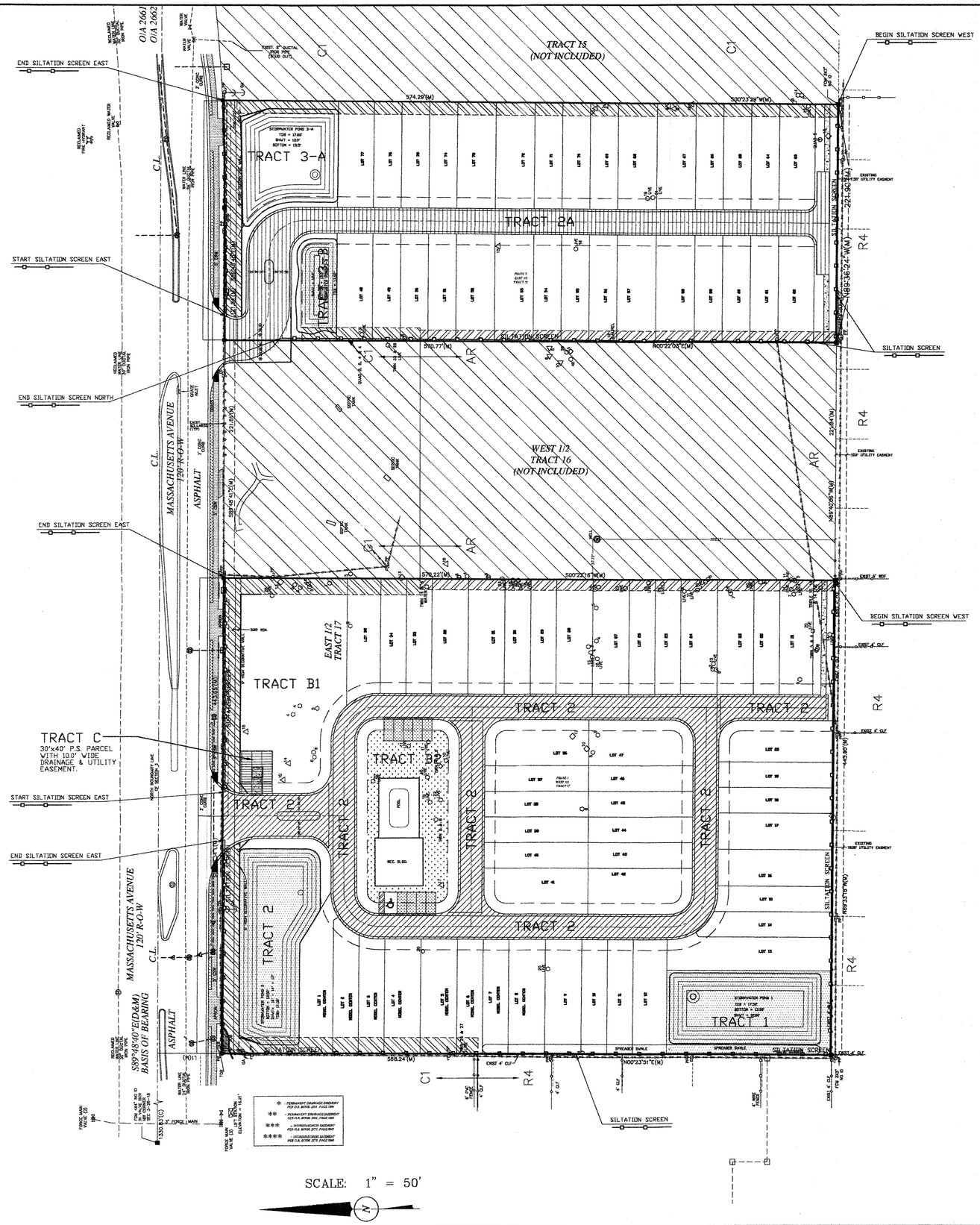


LEGEND:

A/C = AIR CONDITIONER, BFP = BACK FLOW PREVENTOR, BSL = BUILDING SETBACK LINE, (C) = CALCULATED, C# = CURVE NUMBER (SEE CURVE TABLE), CB = CABLE BOX, CLP = CONCRETE LIGHT POLE, C/S = CONCRETE SLAB, CLF = CHAIN LINK FENCE, CI = CURB INLET, CONC = CONCRETE, CSW = CONCRETE SIDEWALK, (D) = DEED, DE = DRAINAGE EASEMENT, DMH = DRAINAGE MANHOLE, EB = ELECTRIC BOX, EOL = EDGE OF LIMEROCK, EOW = EDGE OF WATER, E/P = EDGE OF PAVEMENT, (F) = FIELD, F/C = FENCE CORNER, FCC = FOUND CROSS CUT, FCM = FOUND CONCRETE MONUMENT, FFE = FINISHED FLOOR ELEVATION, FIP = FOUND IRON PIPE, FIR = FOUND IRON ROD, FN = FOUND NAIL, FND = FOUND NAIL AND DISK, FPC = FLORIDA POWER CORPORATION, GA = GUY ANCHOR, GI = GRATE INLET, ID = IDENTIFICATION, IE = INGRESS & EGRESS EASEMENT, INV = INVERT, LB = LICENSED BUSINESS, LP = LIGHT POLE, (M) = MEASURED, MH = MANHOLE, MP = METER POLE, OHW = OVERHEAD WIRE, O/A = OVER ALL, (P) = PLAT, PC = POINT OF CURVATURE, PCP = PERMANENT CONTROL POINT, PI = POINT OF INTERSECTION, PP = POWER POLE, POB = POINT OF BEGINNING, POC = POINT OF COMMENCEMENT, PRC = POINT OF REVERSE CURVE, PRM = PERMANENT REFERENCE MONUMENT, PT = POINT OF TANGENT, PSM = PROFESSIONAL SURVEYOR AND MAPPER, R/W = RIGHT OF WAY, SIR = SET 5/8" IRON ROD LB 7079, SNH = SANITARY MANHOLE, SND = SET NAIL AND DISK LB 7079, TNF = TRANSFORMER, TOB = TOP OF BANK, TP = TELEPHONE PEDESTAL, UE = UTILITY EASEMENT, WB = WATER BOX, WDF = WOOD FENCE, VA = VALVE, WV = WATER VALVE

CONSTRUCTION PLAN SUBMITTAL

OVERALL TRACT PLAN

SHEET 2-A OF 28

MAGNOLIA OAKS
7240 MASSACHUSETTS AVE.
NEW PORT RICHEY, FL 34653

| REV | DATE | DESCRIPTION |
|---|---|---|
| 02 | 8/14/06 | PER SWFWMD |
| 01 | 7/24/06 | PER PASCO COUNTY & SWFWMD |
| 00 | 5/09/06 | INITIAL SUBMITTAL |

SUBMITTAL DATE:

SCALE: 1" = 50.00'

(PHASE 1)
03-26-16-0070-01700-0010
03-26-16-0070-01700-0020
03-26-16-0070-01700-0030

(PHASE 2)
03-26-16-0070-01600-0010

GALEN JAY HOFMANN , P. E.
8620 AIRWAY BLVD.
NEW PORT RICHEY, FL 34654
P: 727-844-7686
F: 727-844-7686

GALEN J. HOFMANN P.E.
CONSULTING CIVIL ENGINEER
5-9-06
GALEN J. HOFMANN , P.E. # 21796
NOT VALID UNLESS EMBOSSED WITH A RAISED SEAL

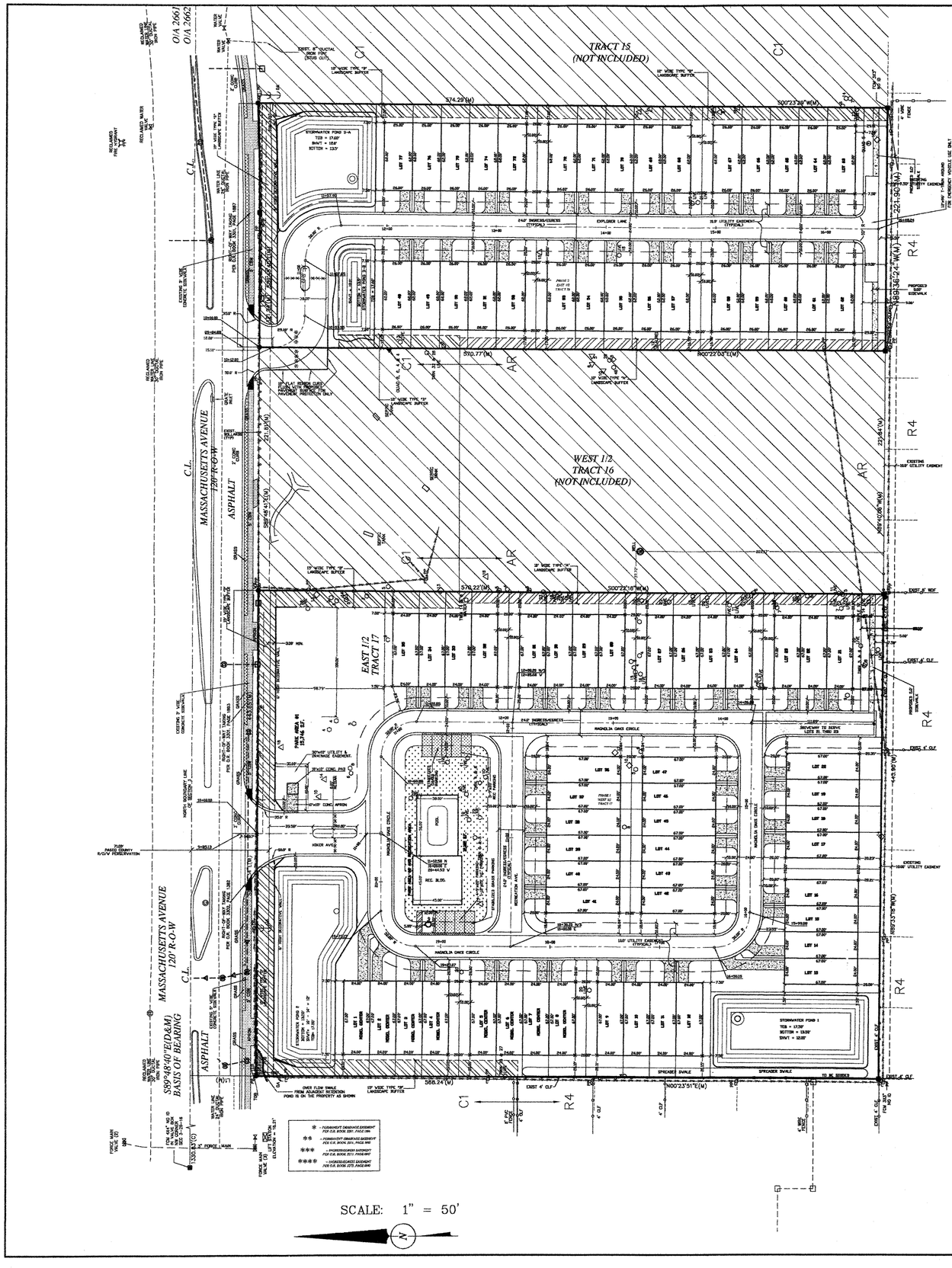


LEGEND:

A/C = AIR CONDITIONER, BFP = BACK FLOW PREVENTOR, BSL = BUILDING SETBACK LINE, (C) = CALCULATED, C# = CURVE NUMBER (SEE CURVE TABLE), CB = CABLE BOX, CLP = CONCRETE LIGHT POLE, C/S = CONCRETE SLAB, CLF = CHAIN LINK FENCE, CI = CURB INLET, CONC = CONCRETE, CSW = CONCRETE SIDEWALK, (D) = DEED, DE = DRAINAGE EASEMENT, DMH = DRAINAGE MANHOLE, EB = ELECTRIC BOX, EOL = EDGE OF LIMEROCK, EOW = EDGE OF WATER, E/P = EDGE OF PAVEMENT, (F) = FIELD, F/C = FENCE CORNER, FCC = FOUND CROSS CUT, FCM = FOUND CONCRETE MONUMENT, FFE = FINISHED FLOOR ELEVATION, FIP = FOUND IRON PIPE, FIR = FOUND IRON ROD, FN = FOUND NAIL, FND = FOUND NAIL AND DISK, FPC = FLORIDA POWER CORPORATION, GA = GUY ANCHOR, GI = GRATE INLET, ID = IDENTIFICATION, IE = INGRESS & EGRESS EASEMENT, INV = INVERT, LB = LICENSED BUSINESS, LP = LIGHT POLE, (M) = MEASURED, MH = MANHOLE, MP = METER POLE, OHW = OVERHEAD WIRE, O/A = OVER ALL, (P) = PLAT, PC = POINT OF CURVATURE, PCP = PERMANENT CONTROL POINT, PI = POINT OF INTERSECTION, PP = POWER POLE, POB = POINT OF BEGINNING, POC = POINT OF COMMENCEMENT, PRC = POINT OF REVERSE CURVE, PRM = PERMANENT REFERENCE MONUMENT, PT = POINT OF TANGENT, PSM = PROFESSIONAL SURVEYOR AND MAPPER, R/W = RIGHT OF WAY, SIR = SET 5/8" IRON ROD LB 7079, SMH = SANITARY MANHOLE, SND = SET NAIL AND DISK LB 7079, TNF = TRANSFORMER, TOB = TOP OF BANK, TP = TELEPHONE PEDESTAL, UE = UTILITY EASEMENT, WB = WATER BOX, WDF = WOOD FENCE, VA = VALVE, WV = WATER VALVE

## SITE INFORMATION

POTABLE WATER SERVICE: CITY OF NEW PORT RICHEY

SANITARY SEWER SERVICE: CITY OF NEW PORT RICHEY

POWER & STREET LIGHTING: PROGRESS ENERGY LTD.

FIRE SERVICE: PASCO COUNTY

FIRE PROTECTION: FIRE HYDRANTS PER CITY OF NEW PORT RICHEY AND PASCO COUNTY CODE.

POWER & STREET LIGHTING: PROGRESS ENERGY
THE DEVELOPER SHALL NOTIFY THE APPROPRIATE ELECTRICAL UTILITY, IN ADVANCE, OF HIS INTENT TO REQUEST SERVICE AND PROVIDE CONFIRMATION TO THE COUNTY OF SERVICE AVAILABILITY PRIOR TO PRELIMINARY PLAN APPROVAL.

TELEPHONE SERVICE PROVIDER: VERIZON

** PROJECT TO BE COMPLETED IN TWO PHASES

TAX ID No: 03-26-16-0070-01700-0010 (PHASE 1)
03-26-16-0070-01700-0020 (PHASE 1)
03-26-16-0070-01700-0030 (PHASE 1)
03-26-16-0070-01600-0010 (PHASE 2)

03/26/16/0070/01700/0010 = EAST 1/2 TRACT 17 = 2.90 ACRES
03/26/16/0070/01700/0020 & 0030 = WEST 1/2 TRACT 17 = 2.90 ACRES
03/26/16/0070/01600/0010 = EAST 1/2 TRACT 16 = 2.91 ACRES

EXISTING ZONING = P.U.D. ( ALL PARCELS)

EXISTING LAND USE = 2 DILAPITATED BUILDINGS ON TRACT 17 - OTHERWISE VACANT
EXISTING LAND USE = EAST 1/2 TRACT 16 (PHASE 2) IS VACANT

FUTURE LAND USE DESIGNATION = ROR

* 03-26-16-0070-01700-0010 (100%)
* 03-26-16-0070-01700-0030 (100%)
* 03-26-16-0070-01700-0020 (99.84% OF PARCEL - SOUTH)
* 03-26-16-0070-01600-0010 (99.99% OF PARCEL - SOUTH)

FUTURE LAND USE DESIGNATION = RES-9

* 03-26-16-0070-01700-0020 (0.16% OF PARCEL - SOUTH)
* 03-26-16-0070-01600-0010 (0.01% OF PARCEL - SOUTH)

PROPOSED USE: 77 TOWNHOMES FOR 55 AND OLDER COMMUNITY

PROPOSED DENSITY: 77 UNITS / 8.71 ACRES = 8.84 UNITS/AC.
SEE CHART BELOW FOR TABULAR FORMAT.

NO COMMERCIAL OR RETAIL USES PROPOSED

EXISTING ON SITE EASEMENTS : SEE CERTIFIED SURVEY
GARBAGE DISPOSAL: PICKUP SERVICE

PER LDC FOR NEIGHBORHOOD PARK REQUIREMENTS (610.15):
REQUIREMENT: 1.0 ACRE CONTIGUOUS PARK FOR 25-100 UNITS
PROPOSED: 2 PARK & RECREATIONAL AREAS = 0.64 ACRES
FOR PROPOSED 55 AND OLDER COMMUNITY

BOTH PHASE 1 AND 2 ARE PROPOSED DEED RESTRICTED 55 YEARS AND OLDER RESIDENTS.

ALL UTILITIES WILL BE PLACED UNDERGROUND WHERE FEASIBLE

LANDSCAPE REQUIREMENTS: SEE LANDSCAPE PLAN

PROPOSED INTERIOR SUBDIVISION STREET CLASSIFICATION:
TYPE 4 LOCAL (TO SERVICE NOT MORE THAN 50 LOTS)

FUGITIVE DUST SHALL BE CONTROLLED BY ON-SITE WATERING OF CONSTRUCTION AREA BY SITE CONTRACTOR ON A AS-NEEDED-BASIS DAILY

TOTAL ON-SITE FILL ANTICIPATED = 11,002 C.Y. (SEE CALCULATIONS TO THE RIGHT)

NO ON-SITE BURNING WILL BE ALLOWED

NOTE:

PROPOSED SITE IS LOCATED IN FOOD ZONE "C" PER F.E.M.A.
COMMUNITY PANEL NO. 120230 0189 C
REVISED MARCH 15, 1984

MAXIMUM BUILDING HEIGHT = 45.0'
ALL PROPOSED STRUCTURES NOT TO EXCEED 2 STORIES.

GROSS RESIDENTIAL ACREAGE DENSITIES IN TABULAR FORMAT

| | NUMBER OF UNITS | ACREAGE | DENSITY |
|---|---|---|---|
| PHASE 1 | 47 (TRACT 17) | 5.80 | 8.10 UNITS/ACRE |
| PHASE 2 | 30 (EAST 1/2 TRACT 16) | 2.91 | 10.31 UNITS/ACRE |
| | 77 (TOTAL) | 8.71 | 8.84 UNITS/ACRE |

ENTIRE PROJECT SITE (ALL 4 PARCELS) NATRUAL FEATURES INFORMATION:
- NO NATURAL OR MAN MADE LAKES
- NO RIVERS
- NO WETLANDS OF ANY TYPE
- NO SIGNIFICANT HABITAT PER PASCO COUNTY INTERACTIVE MAPS
- NO ARCHAEOLOGICAL SITES PER PASCO COUNTY INTERACTIVE MAPS

NET RESIDENTIAL ACREAGE DENSITIES = GROSS PER INFO LISTED ABOVE.
8.71 ACRES - 0 = 8.71 ACRES OF DEVELOPABLE AREA

GENERAL DRAINAGE SUMMARY FOR ENTIRE PROJECT:
THE PROJECT WILL HAVE ON-SITE DRY RETENTION/DETENTION PONDS. PONDS WILL PROVIDE THE FIRST 1/2" OF TREATMENT VOLUME AND TREATMENT WILL BE VIA PERCOLATION. THE STORMWATER SYSTEM WILL ATTENUATE THE 25 YEAR, 24 HOUR STORM EVENT. DISCHARGE FOR THE PONDS WILL BE TO MASSACHUSETTS AVENUE STORMWATER SYSTEM AND TO THE EXISTING DISCHARGE PIPE LOCATED IN TRACT 17 ON THE SOUTHERN PORTION OF THE WESTERN PROPERTY LINE.

REQUIRED PARKING: 2 SPACES PER UNIT
PROPOSED PARKING: EACH UNIT TO HAVE A ONE CAR GARAGE AND ONE 20' DEEP PARKING DRIVE.
* ADDITIONAL PARKING AT REC FACILITY (9-9'x20' STABILIZED GRASS SPACES & 1 12'x20' H.C. ASPHALT)

GATED ENTRIES TO COMPLY WITH EMERGENCY VEHICLE ACCESS REQUIREMENTS

PER PASCO COUNTY FIRE PREVENTION, ALL SUBDIVISION ROADWAYS ARE TO HAVE A MINIMUM OF 13'-6" VERTICAL CLEARANCE.

THE PROPOSED ROADWAY SYSTEM IS TO BE IN SUBSTANTIAL CONFORMANCE WITH THE MANUAL OF UNIFORM MINIMUM STANDARDS FOR DESIGN, CONSTRUCTION, AND MAINTENANCE OF STREETS AND HIGHWAYS, STATE OF FLORIDA, IN EFFECT AT THE TIME THE PLANS WERE PREPARED.

IF DURING CONSTRUCTION ACTIVITIES ANY EVIDENCE OF HISTORIC RESOURCES, INCLUDING BUT NOT LIMITED TO ABORIGINAL OR HISTORIC POTTERY, PREHISTORIC STONE TOOLS, BONE OR SHELL TOOLS, HISTORIC TRASH PITS, OR HISTORIC BUILDING FOUNDATION, ARE DISCOVERED, WORK SHALL COME TO AN IMMEDIATE STOP AND THE FLORIDA DEPARTMENT OF HISTORIC RESOURCES (STATE HISTORIC PRESERVATION OFFICER) AND PASCO COUNTY SHALL BE NOTIFIED WITHIN TWO WORKING DAYS OF RESOURCES FOUND ON THE SITE.

ALL INTERNAL STREETS TO BE PRIVATELY OWNED AND MAINTAINED BY THE HOME OWNERS ASSOCIATION WITH THE EXCEPTION OF THE PHASE 2 ENTRANCE (INGRESS/EGRESS EASEMENT)

NO WELLHEAD PROTECTION AREAS (WPA) WITHIN 1,000 FEET OF PROPOSED DEVELOPMENT

PROPOSED FAR PHASE 1 = 1.73 AC / 5.80 AC = 0.2991 OR 29.91%
PROPOSED FAR PHASE 2 = 1.11 AC / 2.91 AC = 0.3815 OR 38.15%
TOTAL FAR = 2.84 AC / 8.71 AC = 0.3261 OR 32.61%

1.0 ACRE NEIGHBORHOOD PARK:

| | | |
|---|---|---|
| PARK AREA #1 | 15,746 S.F. | PARK AREA WITH 10,000 S.F. OPEN SPACE |
| PARK AREA #2 | 12,102 S.F. | PARK AREA AND RECREATIONAL AREA |
| TOTAL | 27,848 S.F. | = 0.64 ACRES |

ALL INTERNAL STREETS TO BE PRIVATELY OWNED AND MAINTAINED BY THE HOME OWNERS ASSOCIATION WITH THE EXCEPTION OF THE PHASE 2 ENTRANCE (INGRESS/EGRESS EASEMENT)

PROPOSED EARTH WORK FOR MAGNOLIA OAKS

PHASE 1:

| DESCRIPTION | FILL (C.Y.) | CUT (C.Y.) |
|---|---|---|
| LOTS | 3,784 | 138 |
| PADS | 5,884 | 0 |
| ROADS | 737 | 32 |
| PONDS | 0 | 2,238 |
| TOTAL: | 10,405 | 2,408 |

NET FILL COMPACTED IN PLACE = 7,997 C.Y.

PHASE 2:

| DESCRIPTION | FILL (C.Y.) | CUT (C.Y.) |
|---|---|---|
| LOTS | 2,691 | 0 |
| PADS | 867 | 0 |
| ROADS | 348 | 0 |
| PONDS | 0 | 901 |
| TOTAL: | 3,906 | 901 |

NET FILL COMPACTED IN PLACE = 3,005 C.Y.

TOTAL FILL COMPACTED IN PLACE FOR PHASES 1 & 2 = 11,002 C.Y.

*NOTE:*
*ELEVATIONS ARE BASED ON THE NATIONAL GEODETIC VERTICAL DATUM OF 1929 AS ESTABLISHED FROM POLARIS BENCH MARK # Z-63339, FOUND NAIL & DISK EAST SIDE OF KEENA STREET 400.00'± SOUTH OF MASSACHUSETTS AVENUE, ELEVATION = 22.03'*

MEDIAN DETAIL

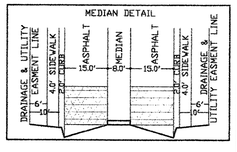


(PHASE 1)
03-26-16-0070-01700-0010
03-26-16-0070-01700-0020
03-26-16-0070-01700-0030

(PHASE 2)
03-26-16-0070-01600-0010

CONSTRUCTION PLAN SUBMITTAL

COORDINATE GEOMETRY PLAN
SHEET 3 OF 28

MAGNOLIA OAKS
7240 MASSACHUSETTS AVE.
NEW PORT RICHEY, FL 34653

| REV | DATE | DESCRIPTION |
|---|---|---|
| 02 | 8/14/06 | PER SWFWMD |
| 01 | 7/24/06 | PER PASCO COUNTY & SWFWMD |
| 00 | 5/09/06 | INITIAL SUBMITTAL |

SUBMITTAL DATE:

SCALE: 1" = 50.00'

GALEN JAY HOFMANN , P. E.
8620 AIRWAY BLVD.
NEW PORT RICHEY, FL 34654
P: 727-844-7686
F: 727-844-7626

GALEN J. HOFMANN , P.E. # 21796
CONSULTING CIVIL ENGINEER
5-1-06
NOT VALID UNLESS EMBOSSED WITH A RAISED SEAL

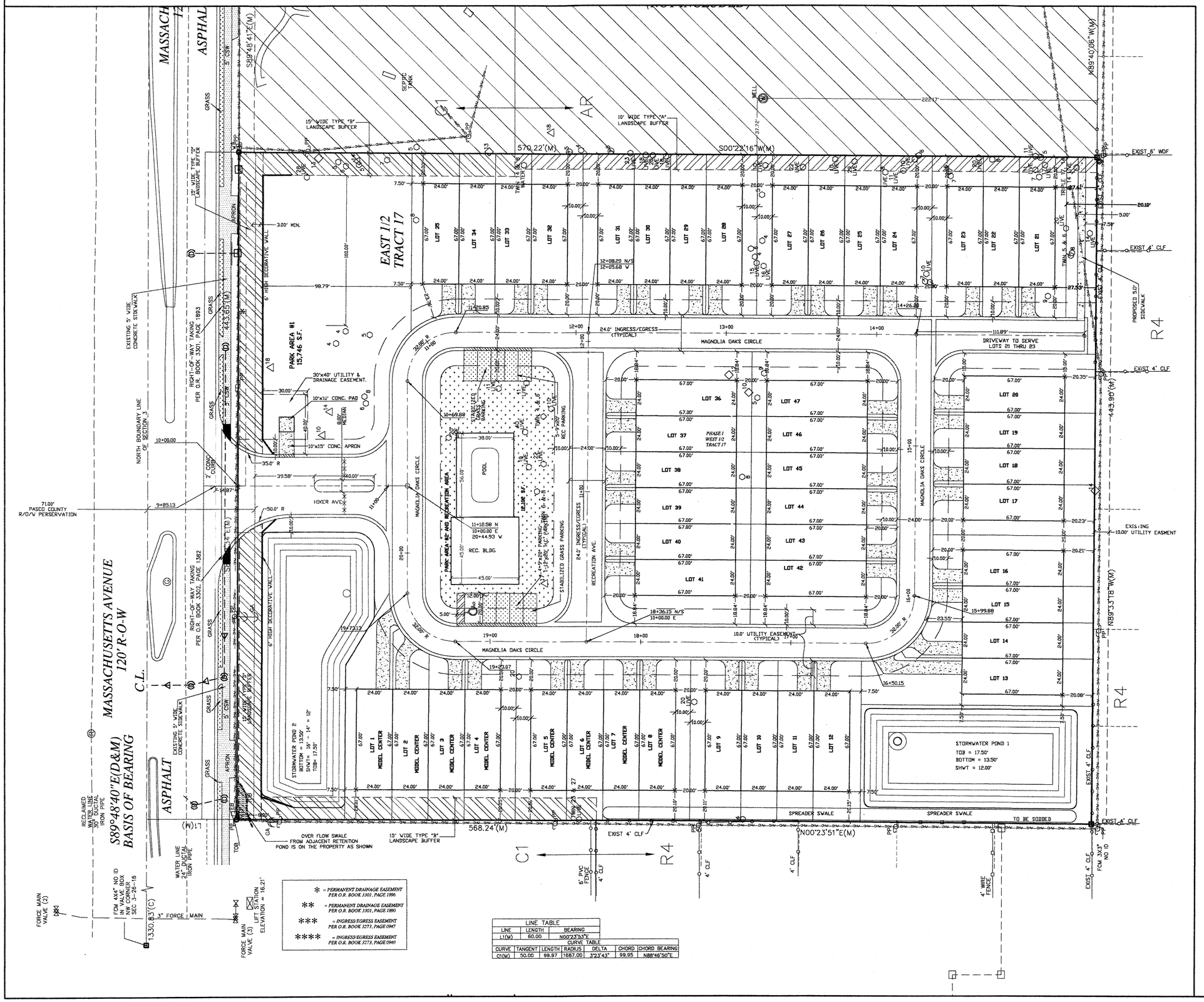


| LINE TABLE | | |
|---|---|---|
| LINE | LENGTH | BEARING |
| L1(M) | 60.00 | N00°23'53"E |

| CURVE TABLE | | | | | | |
|---|---|---|---|---|---|---|
| CURVE | TANGENT | LENGTH | RADIUS | DELTA | CHORD | CHORD BEARING |
| C1(M) | 50.00 | 99.97 | 1687.00 | 3°23'43" | 99.95 | N88°46'50"E |

1" = 30'

TREE LEGEND (SIZES ARE NOTED IN INCHES)

- ○ = CRAPE MYRTLE
- ▷ = CHERRY LAUREL
- ⬡ = OAK
- ▽ = CEDAR
- △ = PINE
- ◇ = PALM
- ◁ = CHINA BERRY
- ◇ = ELF EAR
- ⑦ = UNKNOWN
- ◇ = CAMPHOR
- ● = MULBERRY
- ▶ = GOLDEN RAIN
- ◀ = RAIN TREE

LEGEND

| | |
|---|---|
| 21' | EXISTING CONTOUR LINES |
| C.B. | CATCH BASIN |
| 21.33' | PROPOSED GRADE |
| | PROPOSED HYDRANT ASSEMBLY |
| | PROPOSED WATER SERVICE & METERS |
| | PROPOSED GATE VALVE |
| B.O. | PROPOSED BLOW OFF |
| M.H. | PROPOSED MANHOLE |
| | SILTATION FENCE |
| | DRAINAGE FLOW ARROW |
| C.L.F. | EXISITNG 6' CHAIN LINK FENCE |
| | PROPOSED GRASS/PERVIOUS |

M.H. = MAN HOLE
C.B. = CATCH BASIN
W.M. = WATER MAIN

(PHASE 1) TRACT 17
03-26-16-0070-01700-0010
03-26-16-0070-01700-0020
03-26-16-0070-01700-0030

COORDINATE GEOMETRY PLAN
SHEET 4 OF 28

MAGNOLIA OAKS
7240 MASSACHUSETTS AVE.
NEW PORT RICHEY, FL 34653

SUBMITTAL DATE:

| REV | DATE | DESCRIPTION |
|---|---|---|

SCALE: 1" = 30.00'

GALEN JAY HOFMANN , P. E.
8620 AIRWAY BLVD.
NEW PORT RICHEY, FL 34654
P: 727-844-7686
F: 727-844-7626

GALEN J. HOFMANN P.E.
CONSULTING CIVIL ENGINEER
GALEN J. HOFMANN P.E. # 21798
NOT VALID UNLESS EMBOSSED WITH A RAISED SEAL

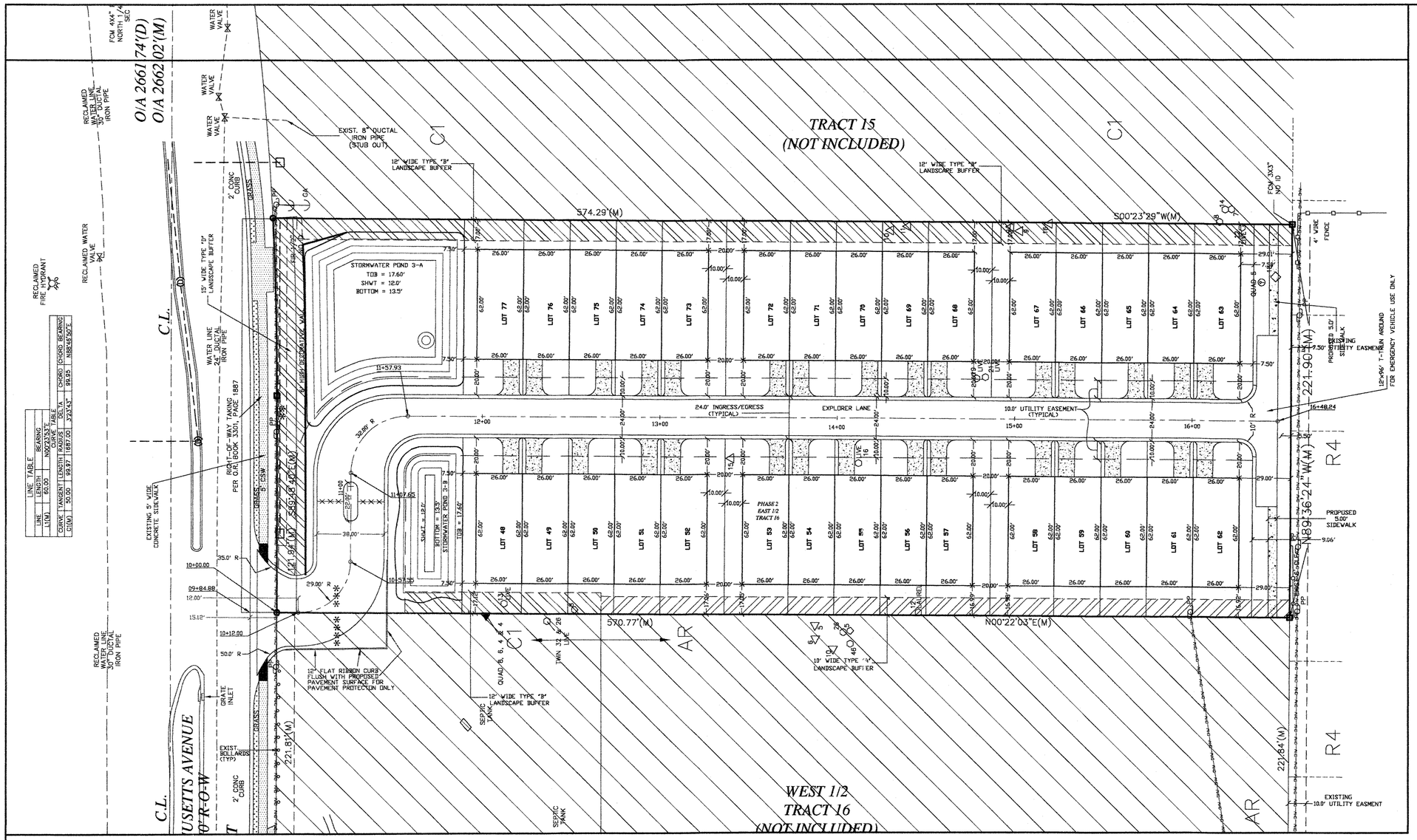


1" = 30'

TREE LEGEND (SIZES ARE NOTED IN INCHES)

- ○ = CRAPE MYRTLE
- ▷ = CHERRY LAUREL
- ○ = OAK
- ▽ = CEDAR
- △ = PINE
- ◇ = PALM
- ◁ = CHINA BERRY
- ⬠ = ELF EAR
- ⓟ = UNKNOWN
- ◇ = CAMPHOR
- ● = MULBERRY
- ▶ = GOLDEN RAIN
- ◀ = RAIN TREE

| LINE TABLE | | |
|---|---|---|
| LINE | LENGTH | BEARING |
| L1(M) | 60.00 | N00°23'29"E |

| CURVE TABLE | | | | | |
|---|---|---|---|---|---|
| CURVE | TANGENT | LENGTH | RADIUS | CHORD | CHORD BEARING |
| C1(M) | 50.00 | 99.97 | 1897.00 | 99.95 | N89°46'50"E |

LEGEND

| | |
|---|---|
| 21' | EXISTING CONTOUR LINES |
| C.B. | CATCH BASIN |
| 21.33' | PROPOSED GRADE |
| | PROPOSED HYDRANT ASSEMBLY |
| | PROPOSED WATER SERVICE & METERS |
| | PROPOSED GATE VALVE |
| B.O. | PROPOSED BLOW OFF |
| M.H. | PROPOSED MANHOLE |
| | SILTATION FENCE |
| | DRAINAGE FLOW ARROW |
| C.L.F. | EXISITNG 6' CHAIN LINK FENCE |
| | PROPOSED GRASS/PERVIOUS |

M.H. = MAN HOLE
C.B. = CATCH BASIN
W.M. = WATER MAIN

* = PERMANENT DRAINAGE EASEMENT PER O.R. BOOK 3301, PAGE 1896

** = PERMANENT DRAINAGE EASEMENT PER O.R. BOOK 3301, PAGE 1890

*** = INGRESS/EGRESS EASEMENT PER O.R. BOOK 3273, PAGE 0947

**** = INGRESS/EGRESS EASEMENT PER O.R. BOOK 3273, PAGE 0940

EAST 1/2
TRACT 16
2.91 ACRES

(PHASE 2) 03-26-16-0070-01600-0010

COORDINATE GEOMETRY PLAN

SHEET 5 OF 28

MAGNOLIA OAKS
7240 MASSACHUSETTS AVE.
NEW PORT RICHEY, FL 34653

SUBMITTAL DATE:

| REV | DATE | DESCRIPTION |
|---|---|---|

SCALE: 1" = 30.00'

GALEN JAY HOFMANN , P. E.
8620 AIRWAY BLVD.
NEW PORT RICHEY, FL 34654
P: 727-844-7686
F: 727-844-7626

GALEN J. HOFMANN P.E.
CONSULTING CIVIL ENGINEER
5-1-08
GALEN J. HOFMANN , P.E. # 21795
NOT VALID UNLESS EMBOSSED WITH A RAISED SEAL

SCALE: 1" = 30'

N.T.S.

**Printed for Customer Review only.**

**Not for Construction.**

## PHASE 1 UNITS

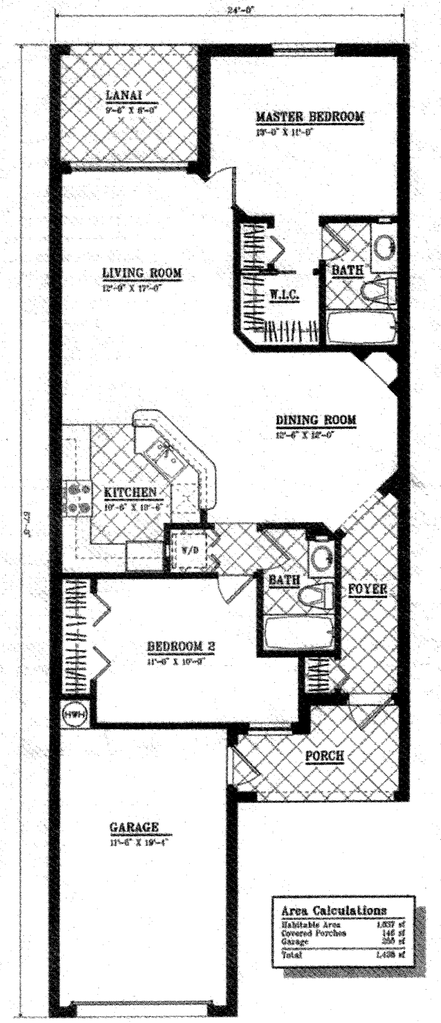


**Floor Plan -- Unit A**

## PHASE 2 UNITS

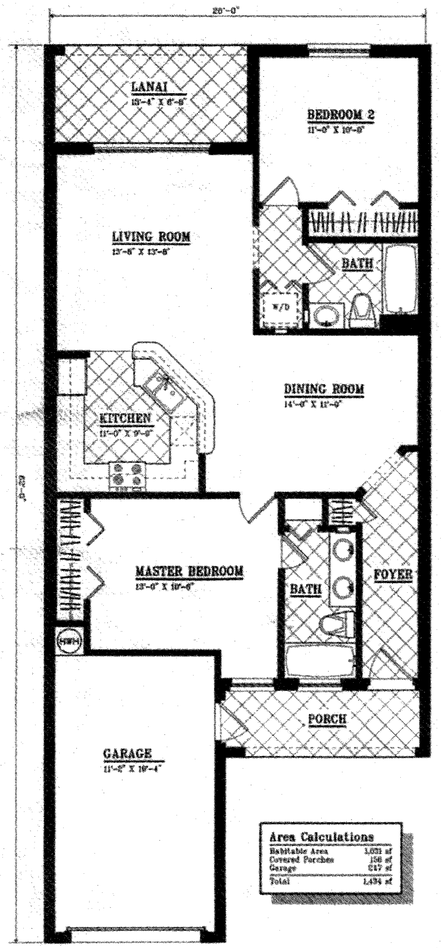


**Floor Plan -- Unit B**

A-1

Massachusetts Avenue
# Townhomes


Panda Construction
5820 Lorraine Road
Port Richey, FL 34668
Tel 727-815-9111
Fax 727-815-9641
Lic. No. CBC 049797

William J. McCann
P.E. Lic. No. 42262

FUEGEL PLANNING SERVICES, INC.
1434 Court St. Ste. 3
Clearwater, FL 33756
Tel 727-446-2848
Fax 727-443-2208
fuegelplanning.net


TYPICAL LOT DETAIL FOR 3 UNIT TOWNHOMES
PHASE 1 UNITS

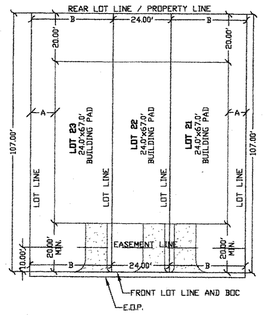


A = 10.0' WITH ADJACENT BUILDING OR 7.5' WITHOUT ADJACENT BUILDING
B= 34.0' WITH ADJACENT BUILDING OR 31.5' WITHOUT ADJACENT BUILDING

TYPICAL LOT DETAIL FOR 4 UNIT TOWNHOMES
PHASE 1 UNITS

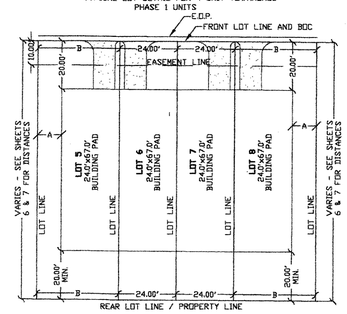


A = 10.0' WITH ADJACENT BUILDING OR 7.5' WITHOUT ADJACENT BUILDING
B= 34.0' WITH ADJACENT BUILDING OR 31.5' WITHOUT ADJACENT BUILDING

TYPICAL LOT DETAIL FOR 5 UNIT TOWNHOMES
PHASE 2 UNITS

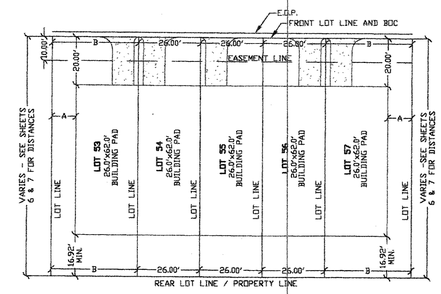


A = 10.0' WITH ADJACENT BUILDING OR 7.5' WITHOUT ADJACENT BUILDING
B= 34.0' WITH ADJACENT BUILDING OR 31.5' WITHOUT ADJACENT BUILDING

BUILDING TYPES AND UNITS TABLE

| BUILDING TYPE | NUMBER OF BUILDINGS | NUMBER OF UNITS |
|---|---|---|
| 3 UNIT TOWNHOME | 1 | 3 |
| 4 UNIT TOWNHOME | 8 | 32 |
| 5 UNIT TOWNHOME | 6 | 30 |
| 6 UNIT TOWNHOME | 2 | 12 |
| TOTALS | 17 | 77 |

DEVELOPMENT STANDARDS (APPROVED PER P.U.D.)

MINIMUM LOT WIDTH OF 24 FEET
MINIMUM LOT DEPTH OF 97 FEET
MINIMUM FRONT-YARD SETBACK OF 20 FEET
MINIMUM SIDE-YARD SETBACK OF 20 FEET BETWEEN BUILDINGS
MINIMUM REAR-YARD SETBACK OF 16.92 FEET

LOTS ARE TO BE FEE SIMPLE AND EACH BUILDING WILL BE SINGE STORY

TYPICAL LOT DETAIL FOR 6 UNIT TOWNHOMES
PHASE 1 UNITS

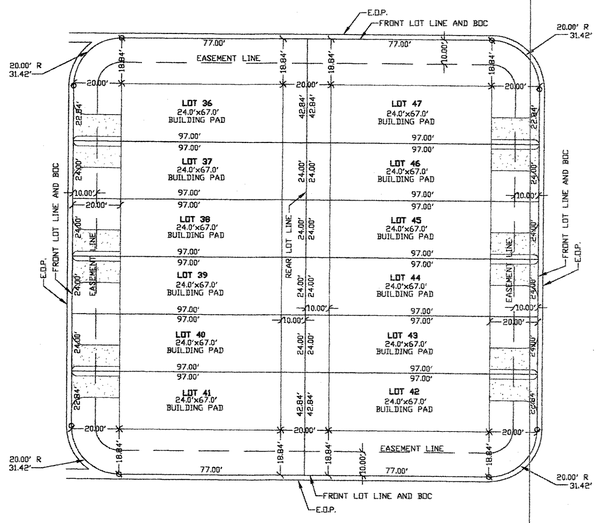


| | |
|---|---|
| TYPICAL LOT & BUILDING DETAILS<br>SHEET 5-A OF 28 | MAGNOLIA OAKS<br>7240 MASSACHUSETTS AVE.<br>NEW PORT RICHEY, FL 34653 |
| | SUBMITTAL DATE: |
| REV DATE DESCRIPTION | SCALE: 1" = 30.00' |
| GALEN JAY HOFMANN , P. E.<br>8620 AIRWAY BLVD.<br>NEW PORT RICHEY, FL 34654<br>P: 727-844-7686<br>F: 727-844-7626 | GALEN J. HOFMANN P.E.<br>CONSULTING CIVIL ENGINEER<br>5-1-08<br>GALEN J. HOFMANN , P.E. # 21798<br>NOT VALID UNLESS EMBOSSED WITH A RAISED SEAL |

1" = 30'

MAGNOLIA OAKS CIRCLE

DRIVEWAY TO SERVE LOTS 21 THRU 23

PARK AREA #1 15,746 S.F.

PARK AREA #2 AND RECREATION AREA

POOL

REC. BLDG.

RECREATION AVE.

HIKER AVE.

GATED ENTRY TO COMPLY WITH EMERGENCY VEHICLE ACCESS REQUIREMENTS

6' HIGH DECORATIVE WALL

STORMWATER POND 1
TOB = 17.50'
BOTTOM = 13.50'
SHWT = 12.00'

STORMWATER POND 2
BOTTOM = 13.50'
SHWT = 16' - 14" = 12'
TOB = 17.50'

SPREADER SWALE

TO BE SODDED

EXISTING 10.00' UTILITY EASMENT

EXIST 6' WDF

EXIST 4' CLF

R4

C1

AR

SEPTIC TANK

WELL

RECLAIMED WATER LINE 30" DUCTAL IRON PIPE

WATER LINE 24" DUCTAL IRON PIPE

FORCE MAIN VALVE (2)

3" FORCE MAIN

FORCE MAIN VALVE (3)

LIFT STATION ELEVATION = 16.21'

## MEDIAN DETAIL

DRAINAGE & UTILITY EASMENT LINE — 4.0' SIDEWALK — 2.0' CURB — 15.0' ASPHALT — 8.0' MEDIAN — 15.0' ASPHALT — 2.0' CURB — 4.0' SIDEWALK — DRAINAGE & UTILITY EASMENT LINE

6' — 10' — 10' — 6'

## LEGEND

| | |
|---|---|
| 21' | EXISTING CONTOUR LINES |
| C.B. | CATCH BASIN |
| 21.33' | PROPOSED GRADE |
| | PROPOSED HYDRANT ASSEMBLY |
| | PROPOSED WATER SERVICE & METERS |
| | PROPOSED GATE VALVE |
| B.O. | PROPOSED BLOW OFF |
| M.H. | PROPOSED MANHOLE |
| | SILTATION FENCE |
| | DRAINAGE FLOW ARROW |
| C.L.F. | EXISITNG 6' CHAIN LINK FENCE |
| | PROPOSED GRASS/PERVIOUS |

M.H. = MAN HOLE
C.B. = CATCH BASIN
W.M. = WATER MAIN

(PHASE 1) TRACT 17
03-26-16-0070-01700-0010
03-26-16-0070-01700-0020
03-26-16-0070-01700-0030

PROPOSED LOT DIMENSIONAL PLAN
SHEET 6 OF 28

MAGNOLIA OAKS
7240 MASSACHUSETTS AVE.
NEW PORT RICHEY, FL 34653

SUBMITTAL DATE:

| REV | DATE | DESCRIPTION |
|---|---|---|

SCALE: 1" = 30.00'

GALEN JAY HOFMANN , P. E.
8620 AIRWAY BLVD.
NEW PORT RICHEY, FL 34654
P: 727-844-7686
F: 727-844-7626

GALEN J. HOFMANN P.E.
CONSULTING CIVIL ENGINEER
GALEN J. HOFMANN , P.E. # 21798
NOT VALID UNLESS EMBOSSED WITH A RAISED SEAL

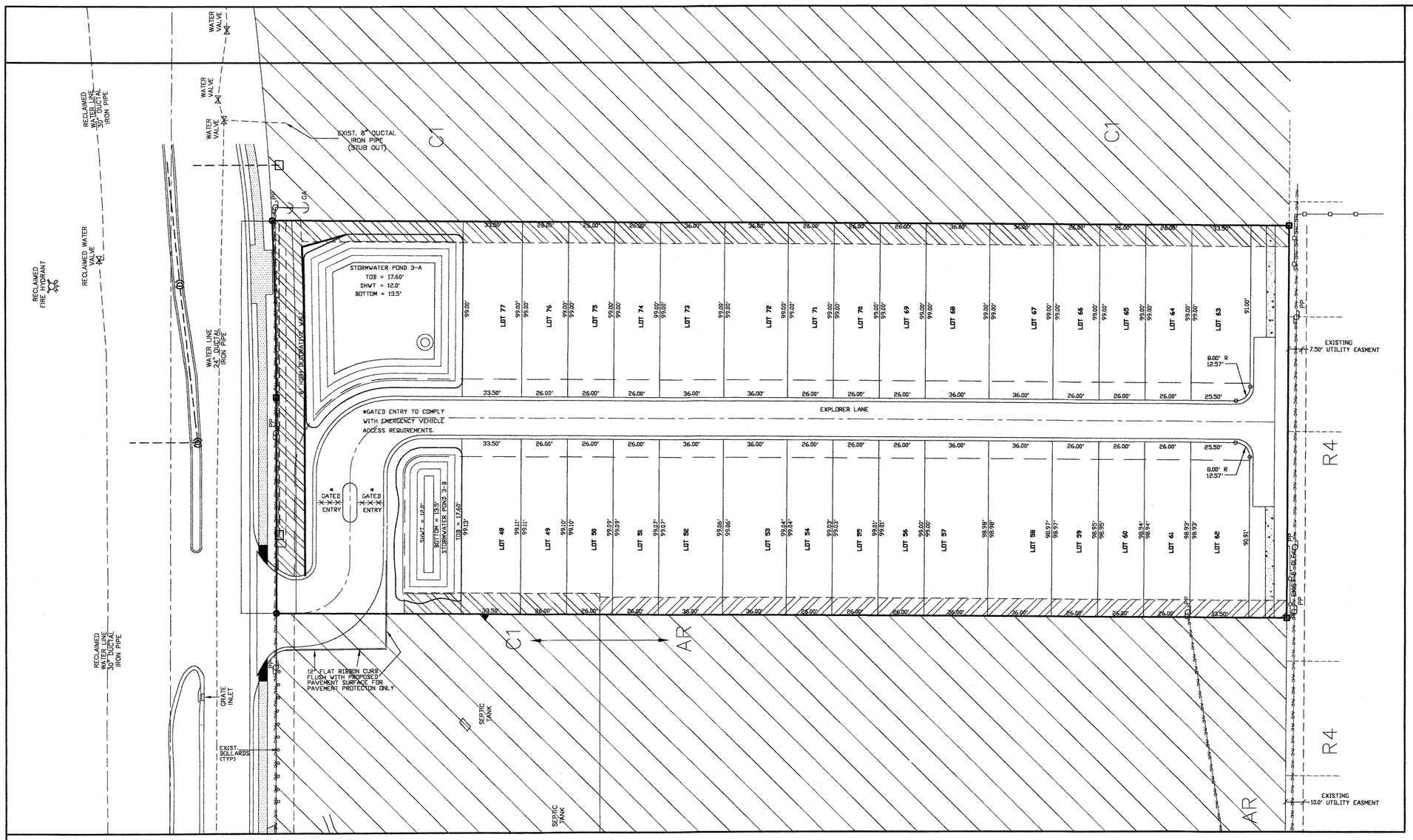


## LEGEND

| | |
|---|---|
| 21' | EXISTING CONTOUR LINES |
| C.B. | CATCH BASIN |
| 21.33' | PROPOSED GRADE |
| | PROPOSED HYDRANT ASSEMBLY |
| | PROPOSED WATER SERVICE & METERS |
| | PROPOSED GATE VALVE |
| B.O. | PROPOSED BLOW OFF |
| M.H. | PROPOSED MANHOLE |
| | SILTATION FENCE |
| | DRAINAGE FLOW ARROW |
| C.L.F. | EXISITNG 6' CHAIN LINK FENCE |
| | PROPOSED GRASS/PERVIOUS |

M.H. = MAN HOLE
C.B. = CATCH BASIN
W.M. = WATER MAIN

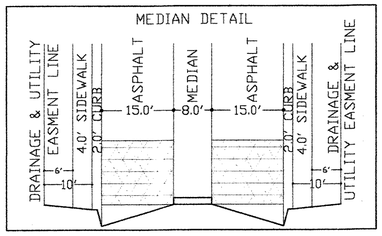


EAST 1/2
TRACT 16
2.91 ACRES

(PHASE 2) 03-26-16-0070-01600-0010

PROPOSED LOT DIMENSIONAL PLAN
SHEET 7 OF 28

MAGNOLIA OAKS
7240 MASSACHUSETTS AVE.
NEW PORT RICHEY, FL 34653

SUBMITTAL DATE:

| REV | DATE | DESCRIPTION |
|---|---|---|
| | | |

SCALE: 1" = 30.00'

GALEN JAY HOFMANN , P. E.
8620 AIRWAY BLVD.
NEW PORT RICHEY, FL 34654
P: 727-844-7686
F: 727-844-7626

GALEN J. HOFMANN P.E.
CONSULTING CIVIL ENGINEER
GALEN J. HOFMANN , P.E. # 31726
NOT VALID UNLESS EMBOSSED WITH A RAISED SEAL

## 200' SURROUNDING COMPREHENSIVE LAND USE MAP

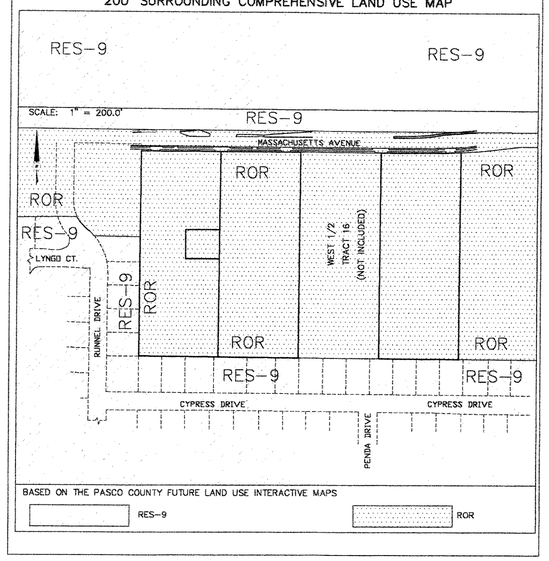


ASSESSMENT OF PROPOSED PROJECTS IMPACT ON PUBLIC HEALTH AND SAFETY SUPPLEMENTAL DATA:

* ENTIRE DEVELOPMENT TO BE A DEED RESTRICTED 55 YEARS AND OLDER COMMUNITY.

ESTIMATED TOTAL NUMBER OF PERSONS RESIDING IN THE DEVELOPMENT = 77 UNITS x 2.5 PEOPLE = 193 PEOPLE

ESTIMATE OF THE NUMBER OF SCHOOL-AGE CHILDREN = *

ELEMENTARY SCHOOL DISTRICT = COTEE RIVER ELEMENTARY SCHOOL

MIDDLE SCHOOL DISTRICT = CHASCO MIDDLE SCHOOL

HIGH SCHOOL DISTRICT = GULF HIGH SCHOOL

ESTIMATED NUMBER OF RESIDENTS CONSIDERED PART OF THE LABOR FORCE = 193 RESIDENTS x 0.3 = 58

NEAREST HOSPITAL = MORTON PLANT / NORTH BAY 6600 MADISON ST. / NEW PORT RICHEY, FL 34652

NEAREST FIRE STATION = STATION # 29 LOCATED LESS THAN 1 MILE EAST ON MASSACHUSETTS AVENUE.
7800 MASSACHUSETTS AVENUE / 727-834-3488

NEAREST SHERIFF'S OFFICE = PASCO COUNTY SHERRIFF'S OFFICE / 8700 CITIZEN DR. / NEW PORT RICHEY, FL 34654
-- 1.8 MILES FROM PROJECT SITE

PROJECT IS LOCATED IN HURRICANE-EVACUATION ZONE "LEVEL D"

## TREE REMOVAL, REPLACEMENT, LANDSCAPE, & IRRIGATION INFORMATION:

TREE INCHES TO BE REMOVED:

| TREE TYPE | PHASE 1 | PHASE 2 | TOTAL |
|---|---|---|---|
| OAK | 711" | 206" | 917" |
| LIVE OAK | 1,707" | 109" | 1,816" |
| PINE | 473" | 1,231" | 1,704" |
| PALM | 200" | 185" | 385" |
| OTHER | 150" | 111" | 261" |

TOTAL TREE REPLACEMENT INCHES

OAK = 917" @ 3 TO 1 REPLACEMENT = 306"

LIVE OAK = 1,816" @ 1 TO 1 REPLACEMENT = 1,816"

PINE = 1,704" @ 3 TO 1 REPLACEMENT = 568"

PALM = 385" @ 0 REPLACEMENT = 0

OTHER = 261" @ 3 TO 1 REPLACEMENT = 87"

TOTAL INCHES TO BE REMOVED = 5,065"
TOTAL INCHES TO BE REPLACED= 2,777"

TREE LEGEND (SIZES ARE NOTED IN INCHES)

- ⊗ = TREES TO BE REMOVED
- ○ = CRAPE MYRTLE
- ▷ = CHERRY LAUREL
- ○ = OAK
- ▽ = CEDAR
- △ = PINE
- ◇ = PALM
- ◁ = CHINA BERRY
- ○ = ELF EAR
- ⊕ = UNKNOWN
- ○ = CAMPHOR
- ● = MULBERRY
- ▶ = GOLDEN RAIN
- ◀ = RAIN TREE

TREE INCHES TO REMAIN

| TREE TYPE | PHASE 1 | PHASE 2 | TOTAL |
|---|---|---|---|
| OAK | 312" | 18" | 330" |
| LIVE OAK | 589" | 81" | 670" |
| PINE | 126" | 96" | 222" |
| PALM | 49" | 54" | 103" |
| OTHER | 29" | 25" | 54" |
| TOTAL | 1,105" | 274" | 1,379" |

ADDITIONAL LANDSCAPE REQUIREMENTS:

AT LEAST 1 TREE PER LOT

ADDITIONAL LANDSCAPING PER LOT = 10% OF TOTAL BUILDING AREA TO SURROUND EACH UNIT = 24'x67'x0.10 = 160.8 S.F. (PHASE 1)

ADDITIONAL LANDSCAPING PER LOT = 10% OF TOTAL BUILDING AREA TO SURROUND EACH UNIT = 26'x62'x0.10 = 161.2 S.F. (PHASE 2)

TREES, OTHER PLANT MATERIALS AND WALLS REQUIRED WITHIN ALL LANDSCAPE BUFFERS WILL COMPLY WITH ALL REQUIREMENTS FO ORDINANCE 02-04, LANDSCAPING & IRRIGATION. DETAILED LANDSCAPING AND IRRIGATION PLANS WILL BE SUBMITTED AS PART OF THE CONSTRUCTION DRAWINGS.

## PASCO COUNTY STANDARD SITE NOTES:

ALL UTILITY CONSTRUCTION SHALL COMPLY WITH THE CITY OF NEW PORT RICHEY STANDARDS FOR DESIGN AND CONSTRUCTION OF WATER, WASTEWATER, & RECLAIMED WATER FACILITIES, LATEST EDITION.

ALL ON-SITE WATER AND SEWER FACILITIES SHALL BE OWNED AND MAINTAINED BY THE CITY OF NEW PORT RICHEY.

INSTALLATION OF FUEL STORAGE TANKS REQUIRES REVIEW AND APPROVAL BY THE FIRE MARSHAL AND THE ISSUANCE OF A SEPARATE BUILDING PERMIT. APPROVAL OF THE SITE PLAN DOES NOT CONSTITUTE APPROVAL OF THE LOCATION OF THE FUEL TANKS.

ALL PROPOSED SIGNS MUST BE APPLIED FOR, APPROVED, AND PERMITTED ON AN INDIVIDUAL BASIS APART FROM ANY ULTIMATELY-APPROVED SITE PLAN. APPROVAL OF THIS SITE PLAN DOES NOT CONSTITUTE APPROVAL OF ANY SIGNAGE.

ALL ON-SITE PARKING SPACES WILL BE STRIPED AND SIGNED IN ACCORDANCE WITH THE MANUAL ON UNIFORM TRAFFIC CONTROL DEVICES, LATEST EDITION. PARKING SPACES, DIRECTIONAL ARROWS, AND STOP BARS SHALL BE STRIPED IN WHITE. IT SHALL BE THE OWNER/DEVELOPER'S RESPONSIBILITY TO PROPERLY SIGN AND STRIPE THE SITE IN ACCORDANCE WITH APPLICABLE STANDARDS.

THE OWNER/DEVELPER ACKNOWLEDGES THAT THIS APPROVAL DOES NOT INCLUDE ANY WORK IN COUNTY RIGHT-OF-WAY. ALL RIGHT OF WAY WORK SHALL BE A FUNCTION OF AN APPROVED PASCO COUNTY RIGHT-OF-WAY USE PERMIT.

ALL CLEAR-SITE AREAS SHALL BE KEPT FREE OF ANY SIGNAGE, PLANTINGS, TREES, ETC. IN EXCESS OF THREE-AND-A-HALF (3-1/2) FEET IN HEIGHT.

NO IRRIGATION SYSTEM OR LANDSCAPING SHALL BE INSTALLED IN ANY COUNTY OR STATE RIGHT-OF-WAY WITHOUT ISSUANCE OF APPROPRIATE RIGHT-OF-WAY USE PERMIT.

ALL STRUCTURES, INCLUDING BUFFER WALLS, RETAINING WALLS, SIGNAGE, ETC. REQUIRE SEPARATE BUILDING PERMITS.

A PASCO COUNTY RIGHT-OF-WAY USE PERMIT IS REQUIRED PRIOR TO THE COMMENCEMENT OF ANY CONSTRUCTION ACTIVITIES WITHIN COUNTY RIGHT-OF-WAY.

IF DURING CONSTRUCTION ACTIVITIES ANY EVIDENCE OF HISTORICAL RESOURCES, INCLUDING BUT NOT LIMITED TO ABORIGINAL OR HISTORIC POTTERY, PREHISTORIC STONE TOOLS, BONE OR SHELL TOOLS, HISTORIC TRASH PITS, OR HISTORIC BUILDING FOUNDATION, ARE DISCOVERED, WORK SHALL COME TO AN IMMEDIATE STOP AND THE FLORIDA DEPARTMENT OF HISTORIC RESOURCES (STATE HISTORIC OFFICER) AND PASCO COUNTY SHALL BE NOTIFIED WITHIN TWO WORKING DAYS OF THE RESOURCES FOUND ON THE SITE.

THE SOIL EROSION AND SEDIMENT CONTROL DEVICES SHALL BE INSTALLED PRIOR TO CONSTRUCTION, MAINTAINED THROUGHOUT CONSTRUCTION AND UNTIL THE SITE IS PERMANENTLY STABILIZED.

PRIOR TO CONSTRUCTION, A BUILDING PERMIT SHALL BE OSTAINED FOR ALL STRUCTURES THAT HAVE A FOOTER, REGARDLESS OF SIZE, THROUGH PASCO COUNTY CENTRAL PERMITTING. (i.e. INCLUDING BUT NOT INCLUSIVE BUILDINGS, ACCESSORIES, AND RETAINING WALLS)

IT IS THE OWNER'S RESPONSIBILITY (OR "RESPONSIBLE ENTITY") TO INSPECT AND MAINTAIN THE WATER RETENTION SYSTEM ON A REGULAR BASIS.

ALL SODDED SLOPES OVER 4 TO 1, SHALL BE INSTALLED WITH SOD PEGS.

ALL DEMOLITION DEBRIS SHALL BE REMOVED FROM THE SITE AND LEGALLY DISPOSED OF.

OFF-SITE DISTURBED AREAS MUST BE RESTORED AT LEAST TO THE PRE-EXISTING CONDITIONS OR BETTER AND TO THE SATISFACTION OF PASCO COUNTY.

ALL FIRST FLOOR ELEVATIONS (FF) SHALL BE A MINIMUM OF 1' ABOVE THE BASE FLOOD ELEVATION OR AS REQUIRED BY THE LCD SECTION 701.

HANDICAP PARKING SPACES WILL BE PROPERLY SIGNED AND STRIPED IN ACCORDANCE WITH FLORIDA STATUTE 316, THE MANUAL ON UNIFORM TRAFFIC CONTROL DEVICES, OR OTHER APPLICABLE STANDARDS.

THE ARCHETECT/ENGINEER CERTIFIES THAT THE SITE HAS BEEN DESIGNED IN ACCORDANCE WITH THE AMERICANS WITH DISABILITIES ACT.

THE OWNER/DEVELOPER ACKNOWLEDGES THAT THE SITE AND ITS SUBSEQUENT BUILDING PERMITS SHALL COMPLY WITH ALL REZONING/MPUF/PUD CONDITIONS.

FUGITIVE DUST SHALL BE CONTROLLED BY ON-SITE WATERING OF CONSTRUCTION AREA BY SITE CONTRACTOR ON A AS-NEEDED-BASIS.

NO ON-SITE BURNING WILL BE ALLOWED

## 200' SURROUNDING EXISTING ZONING MAP

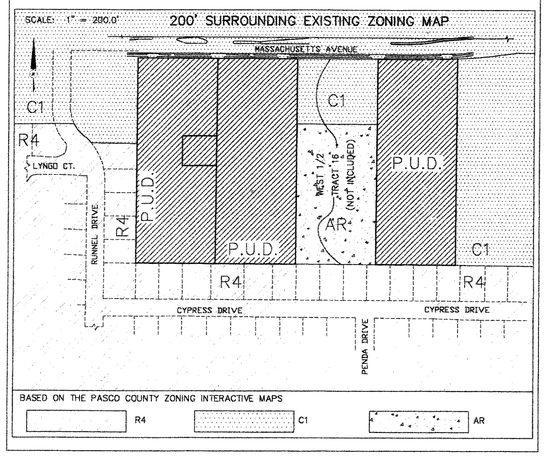


## FEMA FLOOD ZONE MAP

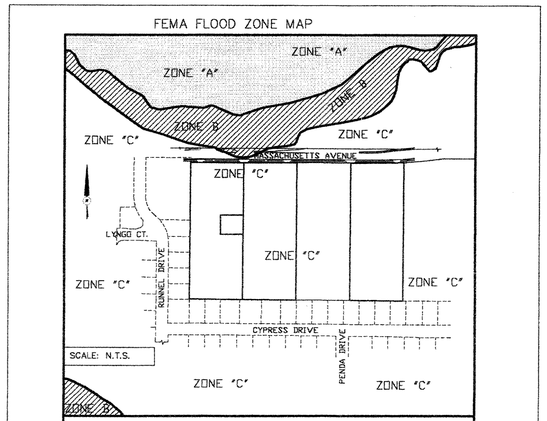


FLOOD ZONE NOTE:
THE PROPOSED SITE(S) LIES WITHIN F.E.M.A. FLOOD ZONE "C" APPROXIMATELY AS SHOWN PER F.E.M.A. FLOOD INSURANCE RATE MAP COMMUNITY PANEL No. 120230 0189 C
MAP REVISED: MARCH 15, 1984.

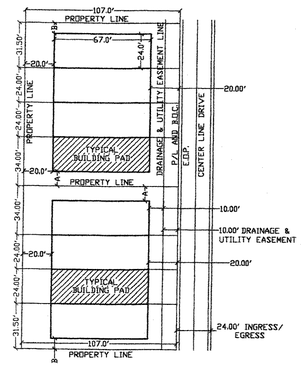


A= 10.0' WHERE ADJACENT STRUCTURE.
B= 7.5' WHERE NO ADJACENT STRUCTURE.

MINIMUM 20.0' REAR SETBACK LOTS 1-35 (PHASE 1)

**PHASE 1 (LOTS 1-35)**
TYPICAL EXTERIOR LOT DIMENSIONS
(MINIMUM DIMENSIONS)

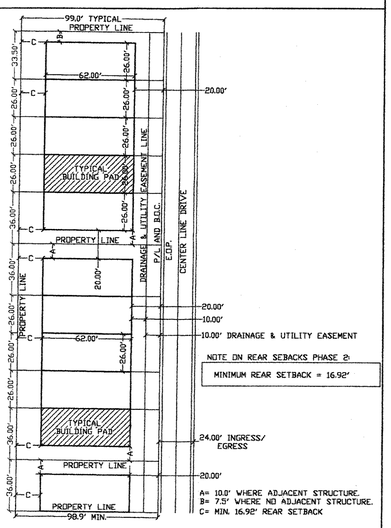


NOTE ON REAR SETBACKS PHASE 2:

MINIMUM REAR SETBACK = 16.92'

A= 10.0' WHERE ADJACENT STRUCTURE.
B= 7.5' WHERE NO ADJACENT STRUCTURE.
C= MIN. 16.92' REAR SETBACK

**PHASE 2 (LOTS 48-77)**
TYPICAL EXTERIOR LOT DIMENSIONS
(MINIMUM DIMENSIONS)

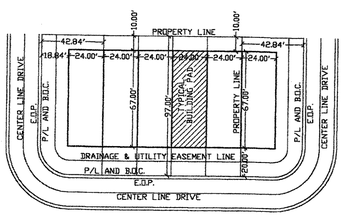


**PHASE 1 (LOTS 36-47)**
TYPICAL INTERIOR LOT DIMENSIONS
(MINIMUM DIMENSIONS)

TYPICAL PROPOSED INTERIOR ROADS WITH EASEMENTS

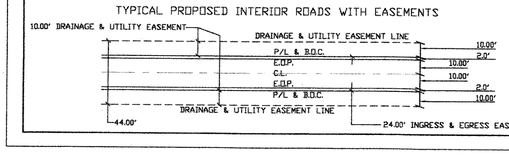


(PHASE 1)
03-26-16-0070-01700-0010
03-26-16-0070-01700-0020
03-26-16-0070-01700-0030

(PHASE 2)
03-26-16-0070-01600-0010

PRELIMINARY & CONSTRUCTION PLAN SIMULTANEOUS SUBMITTAL

SITE INFORMATION & NOTES
SHEET 8 OF 28

MAGNOLIA OAKS
7240 MASSACHUSETTS AVE.
NEW PORT RICHEY, FL 34653

SUBMITTAL DATE:

| REV | DATE | DESCRIPTION |
|---|---|---|
| 00 | 5/09/06 | INITIAL SUBMITTAL |

SCALE: 1" = 50.00'


GALEN JAY HOFMANN , P. E.
8620 AIRWAY BLVD.
NEW PORT RICHEY, FL 34654
P: 727-844-7686
F: 727-844-7626

GALEN J. HOFMANN P.E.
CONSULTING CIVIL ENGINEER
GALEN J. HOFMANN , P.E. # 21798
NOT VALID UNLESS EMBOSSED WITH A RAISED SEAL

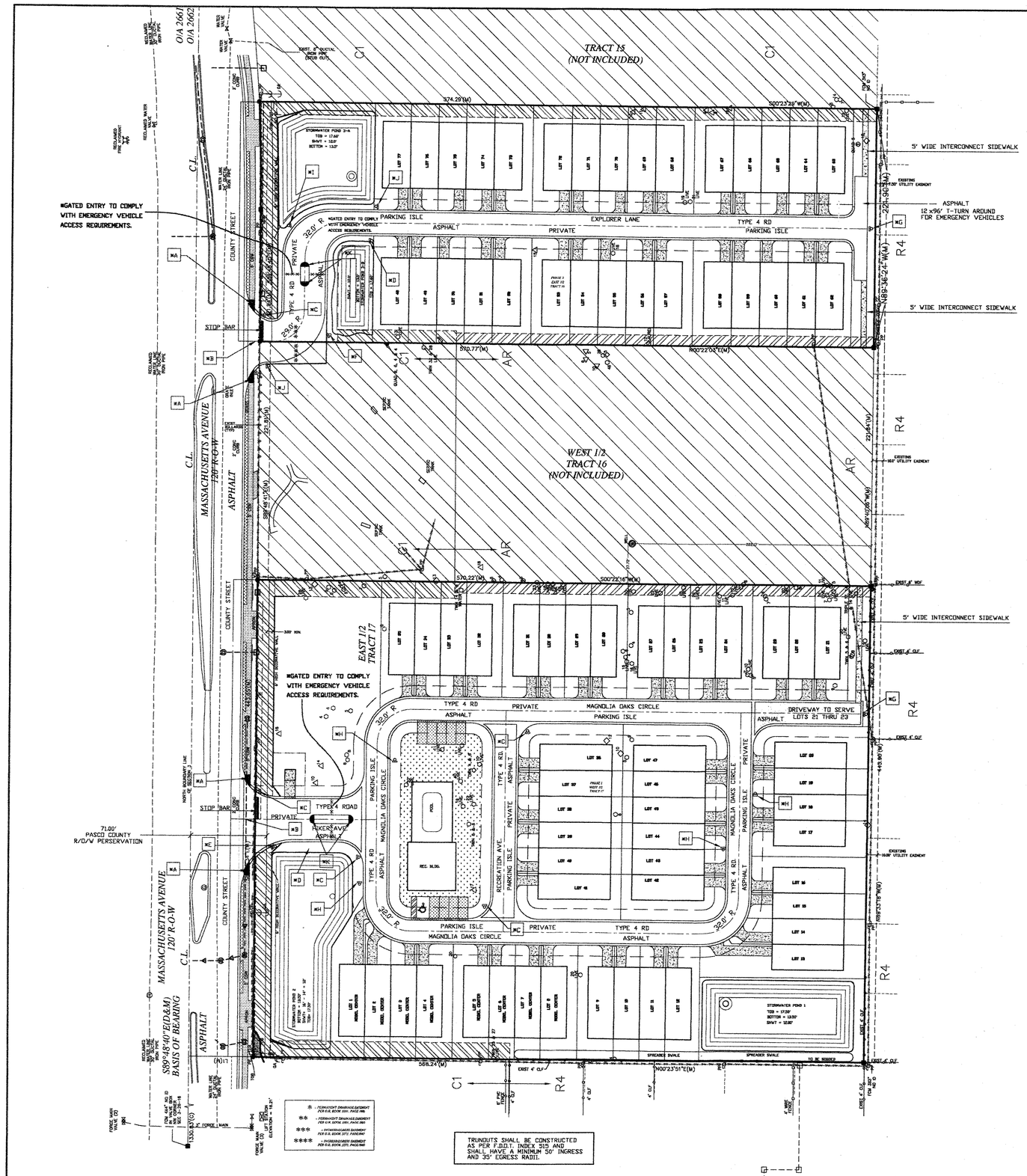


LEGEND:
A/C = AIR CONDITIONER, BFP = BACK FLOW PREVENTOR, BSL = BUILDING SETBACK LINE, (C) = CALCULATED, C# = CURVE NUMBER (SEE CURVE TABLE), CB = CABLE BOX, CLP = CONCRETE LIGHT POLE, C/S = CONCRETE SLAB, CLF = CHAIN LINK FENCE, CI = CURB INLET, CONC = CONCRETE, CSW = CONCRETE SIDEWALK, (D) = DEED, DE = DRAINAGE EASEMENT, DMH = DRAINAGE MANHOLE, EB = ELECTRIC BOX, EOL = EDGE OF LIMEROCK, EOW = EDGE OF WATER, E/P = EDGE OF PAVEMENT, (F) = FIELD, F/C = FENCE CORNER, FCC = FOUND CROSS CUT, FCM = FOUND CONCRETE MONUMENT, FFE = FINISHED FLOOR ELEVATION, FIP = FOUND IRON PIPE, FIR = FOUND IRON ROD, FN = FOUND NAIL, FND = FOUND NAIL AND DISK, FPC = FLORIDA POWER CORPORATION, GA = GUY ANCHOR, GI = GRATE INLET, ID = IDENTIFICATION, IE = INGRESS & EGRESS EASEMENT, INV = INVERT, LB = LICENSED BUSINESS, LP = LIGHT POLE, (M) = MEASURED, MH = MANHOLE, MP = METER POLE, OHW = OVERHEAD WIRE, O/A = OVER ALL, (P) = PLAT, PC = POINT OF CURVATURE, PCP = PERMANENT CONTROL POINT, PI = POINT OF INTERSECTION, PP = POWER POLE, POB = POINT OF BEGINNING, POC = POINT OF COMMENCEMENT, PRC = POINT OF REVERSE CURVE, PRM = PERMANENT REFERENCE MONUMENT, PT = POINT OF TANGENT, PSM = PROFESSIONAL SURVEYOR AND MAPPER, R/W = RIGHT OF WAY, SIR = SET 5/8" IRON ROD LB 7079, SNH = SANITARY MANHOLE, SND = SET NAIL AND DISK LB 7079, TNF = TRANSFORMER, TOB = TOP OF BANK, TP = TELEPHONE PEDESTAL, UE = UTILITY EASEMENT, WB = WATER BOX, WDF = WOOD FENCE, VA = VALVE, WV = WATER VALVE

SIGNING AND MARKING TO BE IN ACCORDANCE WITH THE CURRENT VERSIONS OF THE FEDERAL MANUAL ON UNIFORM TRAFFIC CONTROL DEVICES AND FLORIDA DEPARTMENT OF TRANSPORTATION STANDARDS.

| | | |
|---|---|---|
| *A | HANDICAPPED RAMP PER F.D.O.T. INDEX 304 1 of 3 (LATEST EDITION) | |
| *B | ENTRANCE / TURNOUTS TO BE CONSTRUCTED PER F.D.O.T. INDEX 515 (LATEST EDITION | |
| *C | STOP R1-1 30" X 30" | STREET SIGN 2-D-3, ATTACHED ABOVE STOP SIGN |
| *D | SPEED LIMIT 20 | R2-1 B/W |
| *E | NO OUTLET | W14-2A |
| *F | DEAD END | W14-1A |
| *G | | OM4-1 |
| *H | | W1-11 |
| | 10 MPH | W13-1 ADVISORY SPEED PLAQUE |
| *I | | W3-1 |
| *J | | W1-3 |
| | 10 MPH | W13-1 ADVISORY SPEED PLAQUE |
| *K | R4-7/OM1 YELLOW PAINT FOR ISLAND NOSES | |

PASCO COUNTY TRAFFIC OPERATIONS DIVISION
TRAFFIC CONTROL NOTES FOR PRIVATE STREETS

A) ALL TRAFFIC CONTROL DEVICES SHALL BE INSTALLED IN CONFORMANCE WITH THE MANUAL ON UNIFORM TRAFFIC CONTROL DEVICES AND THE FLORIDA DEPARTMENT OF TRANSPORTATION STANDARDS.

B) STREET NAME SIGNS SHALL BE 9-INCH ON ALL ROAD CLASSIFICATIONS. ALL SIGNS SHALL HAVE 6-INCH SERIES B LETTERS. ALL STREET NAME SIGNS ON PRIVATE ROADS SHALL BE STANDARD D3 STREET NAME SIGNS WITH THE COLORS REVERSED. WHITE BACKGROUND WITH GREEN LETTERS AND BORDER. AT INTERSECTIONS WITH COUNTY OR STATE MAINTAINED ROADS; THE COUNTY OR STATE MAINTAINED ROAD SHALL BE GREEN BACKGROUND WITH WHITE LETTERS AND BORDER.

C) ANY TRAFFIC CONTROL DEVICE FOR A PRIVATE ROADWAY PLACED IN A COUNTY OR STATE RIGHT-OF-WAY SHALL BE INSTALLED ON THE APPROPRIATE BREAKAWAY POST ASSEMBLY.

ALL INTERNAL STREETS TO BE PRIVATELY OWNED AND MAINTAINED BY HOME OWNERS ASSOCIATION

HIKER AVENUE ISLAND NOSES TO BE PAINTED PER FLORIDA DEPARTMENT OF TRANSPORTATION DISTRICT 7 STANDARDS. R4-7/OM1 YELLOW IS REQUIRED FOR END OF THE ISLANDS (NOSES).

EXPLORER LANE ISLAND NOSES TO BE PAINTED PER FLORIDA DEPARTMENT OF TRANSPORTATION DISTRICT 7 STANDARDS. R4-7/OM1 YELLOW IS REQUIRED FOR END OF THE ISLANDS (NOSES).

MAGNOLIA OAKS CIRLCE AT THE SOUTH END - OM4-1 RED PER F.D.O.T. STANDARDS

EXPLORER LANE AT THE SOUTH END - OM4-1 RED PER F.D.O.T. STANDARDS

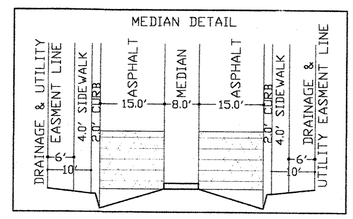


R4-7/OM1 YELLOW IS REQUIRED IN THE END OF THE ENTRY ISLANDS. ISLAND NOSES TO BE PAINTED IN ACCORDANCE WITH F.D.O.T. DISTRICT 7 STANDARDS.

TURNOUTS SHALL BE CONSTRUCTED AS PER F.D.O.T. INDEX 515 AND SHALL HAVE A MINIMUM 50' INGRESS AND 35' EGRESS RADII.

SCALE: 1" = 50'

CONSTRUCTION PLAN SUBMITTAL

TRAFFIC SIGNING & MARKING PLAN
SHEET 9 OF 28

MAGNOLIA OAKS
7240 MASSACHUSETTS AVE.
NEW PORT RICHEY, FL 34653

| REV | DATE | DESCRIPTION |
|---|---|---|
| 02 | 8/14/06 | PER SWFWMD |
| 01 | 7/24/06 | PER PASCO COUNTY & SWFWMD |
| 00 | 5/09/06 | INITIAL SUBMITTAL |

SUBMITTAL DATE:

SCALE: 1" = 50.00'

(PHASE 1)
03-26-16-0070-01700-0010
03-26-16-0070-01700-0020
03-26-16-0070-01700-0030

(PHASE 2)
03-26-16-0070-01600-0010

GALEN JAY HOFMANN , P. E.
8620 AIRWAY BLVD.
NEW PORT RICHEY, FL 34654
P: 727-844-7686
F: 727-844-7626

GALEN J. HOFMANN P.E.
CONSULTING CIVIL ENGINEER
5-7-08
GALEN J. HOFMANN , P.E. # 21795
NOT VALID UNLESS EMBOSSED WITH A RAISED SEAL

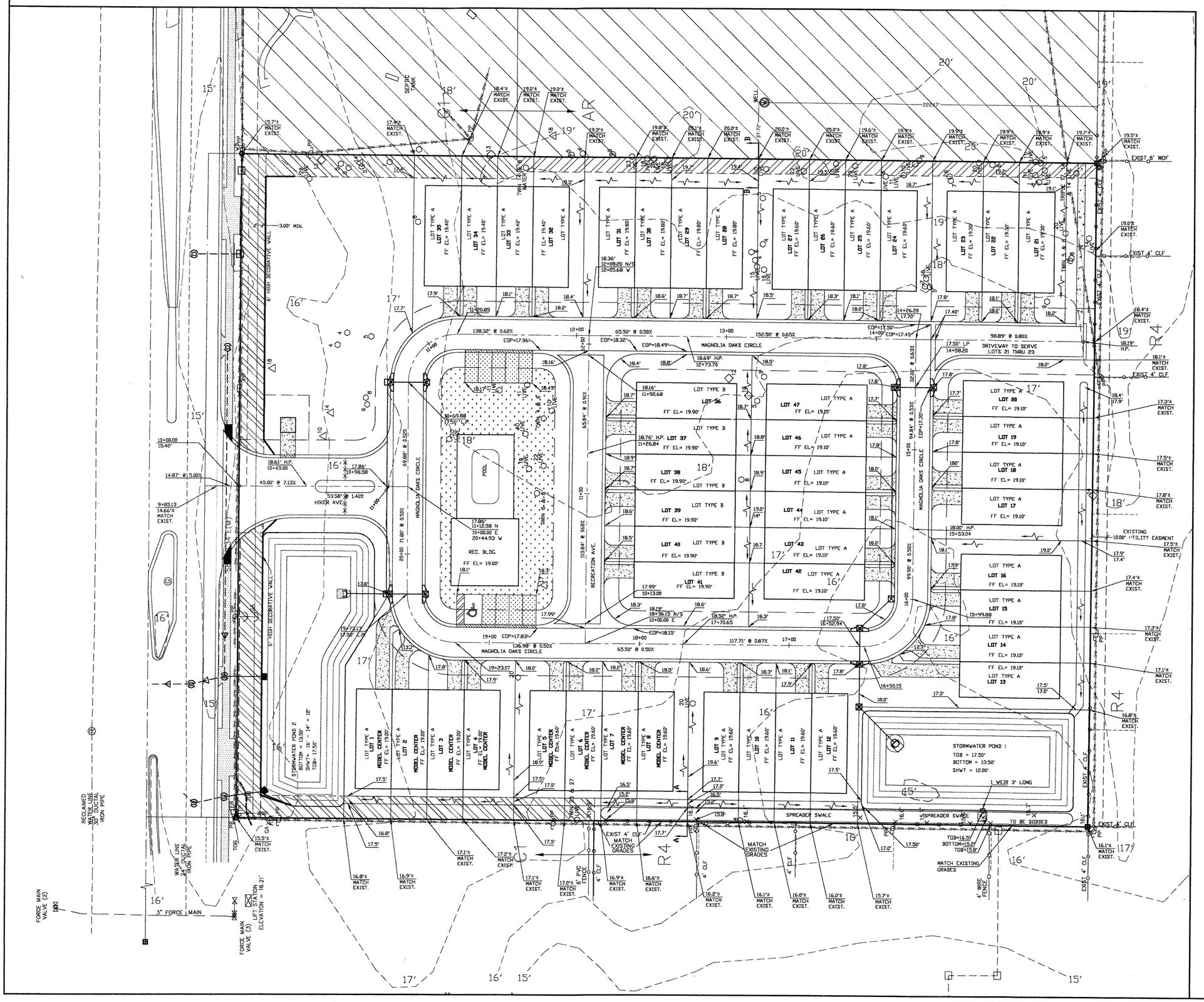


1" = 30'

NOTE:
ELEVATIONS ARE BASED ON THE NATIONAL GEODETIC VERTICAL DATUM OF 1929 AS ESTABLISHED FROM POLARIS BENCH MARK # Z-63,339, FOUND NAIL & DISK EAST SIDE OF KEENA STREET 400.00'± SOUTH OF MASSACHUSETTS AVENUE, ELEVATION = 22.03'

CROSS SECTIONS A-A THRU D-D CAN BE LOCATED ON SHEET 20.

## TYPE 4 ROADWAY TYPICAL SECTION

DESIGN SPEED: 30 MPH
POSTED SPEED: 20 MPH

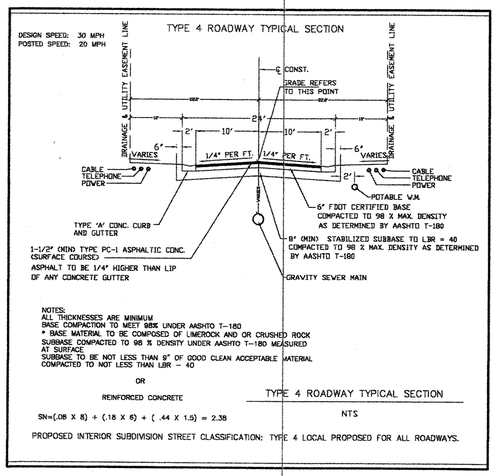


NOTES:
ALL THICKNESSES ARE MINIMUM
BASE COMPACTION TO MEET 98% UNDER AASHTO T-180
* BASE MATERIAL TO BE COMPOSED OF LIMEROCK AND OR CRUSHED ROCK
SUBBASE COMPACTED TO 98 % DENSITY UNDER AASHTO T-180 MEASURED AT SURFACE
SUBBASE TO BE NOT LESS THAN 9" OF GOOD CLEAN ACCEPTABLE MATERIAL COMPACTED TO NOT LESS THAN LBR - 40

OR

REINFORCED CONCRETE

SN=(.08 X 8) + (.18 X 6) + ( .44 X 1.5) = 2.38

TYPE 4 ROADWAY TYPICAL SECTION

NTS

PROPOSED INTERIOR SUBDIVISION STREET CLASSIFICATION: TYPE 4 LOCAL PROPOSED FOR ALL ROADWAYS.

## LEGEND

| | |
|---|---|
| 21' | EXISTING CONTOUR LINES |
| C.B. | CATCH BASIN |
| 21.33' | PROPOSED GRADE |
| | PROPOSED HYDRANT ASSEMBLY |
| | PROPOSED WATER SERVICE & METERS |
| | PROPOSED GATE VALVE |
| B.O. | PROPOSED BLOW OFF |
| M.H. | PROPOSED MANHOLE |
| | SILTATION FENCE |
| | DRAINAGE FLOW ARROW |
| C.L.F. | EXISITNG 6' CHAIN LINK FENCE |
| | PROPOSED GRASS/PERVIOUS |

M.H. = MAN HOLE
C.B. = CATCH BASIN
W.M. = WATER MAIN

(PHASE 1) TRACT 17
03-26-16-0070-01700-0010
03-26-16-0070-01700-0020
03-26-16-0070-01700-0030

PROPOSED GRADING PLAN
SHEET 10 OF 28

MAGNOLIA OAKS
7240 MASSACHUSETTS AVE.
NEW PORT RICHEY, FL 34653

| REV | DATE | DESCRIPTION |
|---|---|---|
| | | |

SUBMITTAL DATE:

SCALE: 1" = 30.00'

GALEN J. HOFMANN, P.E.
CONSULTING CIVIL ENGINEER
8620 AIRWAY BLVD.
NEW PORT RICHEY, FL 34654
Ph 727-844-7686
Fx 727-844-7626

GALEN J. HOFMANN, P.E.
CONSULTING CIVIL ENGINEER
5-1-18
GALEN J. HOFMANN, P.E. # 21798
NOT VALID UNLESS EMBOSSED WITH A RAISED SEAL

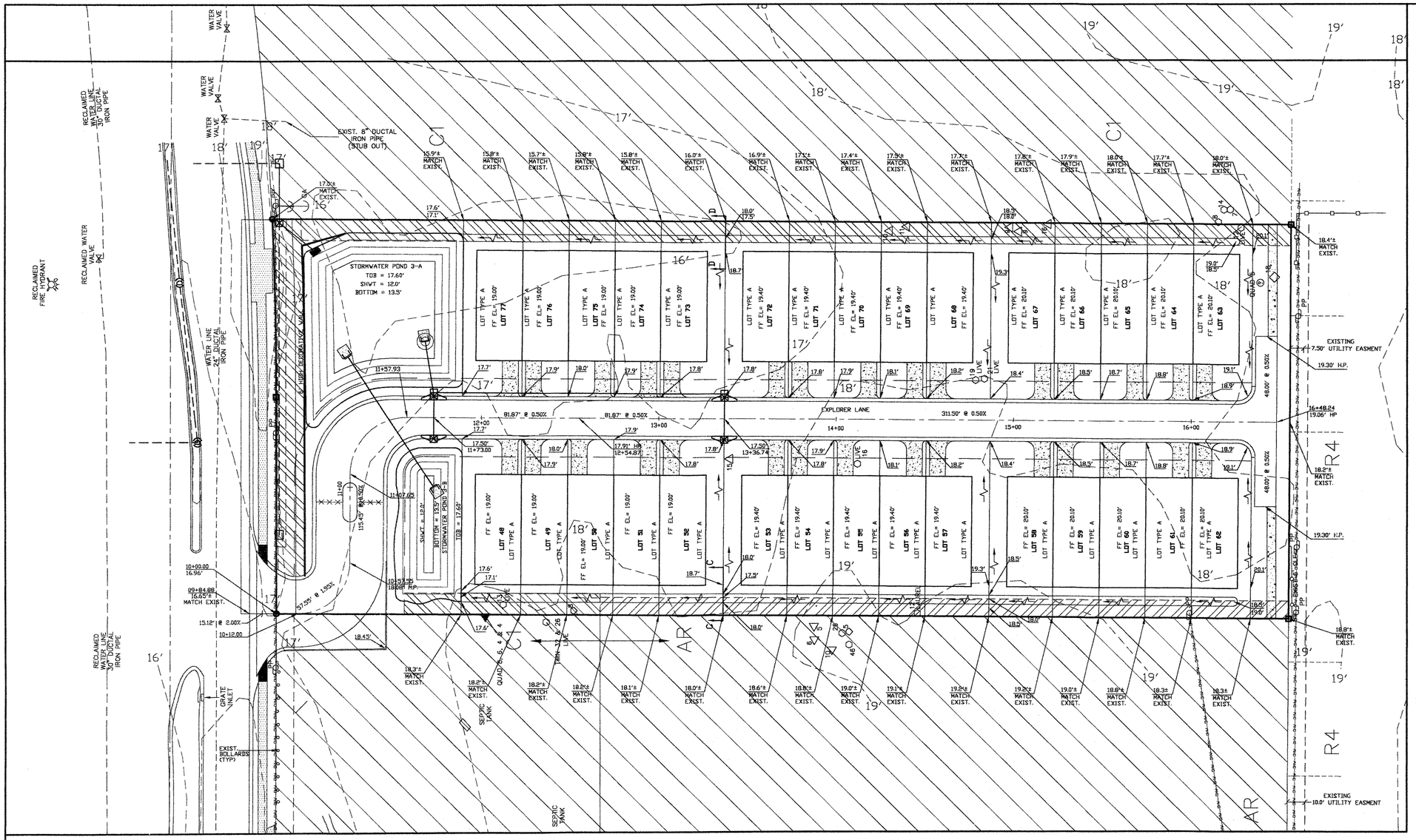


NOTE:
ELEVATIONS ARE BASED ON THE NATIONAL GEODETIC VERTICAL DATUM OF 1929 AS ESTABLISHED FROM POLARIS BENCH MARK # Z-633.39, FOUND NAIL & DISK EAST SIDE OF KEENA STREET 400.00'± SOUTH OF MASSACHUSETTS AVENUE, ELEVATION = 22.03'

1" = 30'

CROSS SECTIONS A-A THRU D-D CAN BE LOCATED ON SHEET 29.

## TYPE 4 ROADWAY TYPICAL SECTION

DESIGN SPEED: 30 MPH
POSTED SPEED: 20 MPH

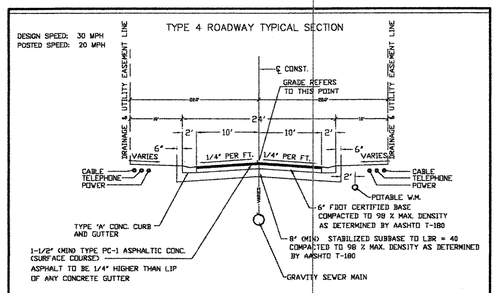


NOTES:
ALL THICKNESSES ARE MINIMUM.
BASE COMPACTION TO MEET 98% UNDER AASHTO T-180
* BASE MATERIAL TO BE COMPOSED OF LIMEROCK AND OR CRUSHED ROCK
SUBBASE COMPACTED TO 98 % DENSITY UNDER AASHTO T-180 MEASURED AT SURFACE
SUBBASE TO BE NOT LESS THAN 9" OF GOOD CLEAN ACCEPTABLE MATERIAL COMPACTED TO NOT LESS THAN LBR – 40

OR

REINFORCED CONCRETE

SN=(.08 X 8) + (.18 X 6) + ( .44 X 1.5) = 2.38

TYPE 4 ROADWAY TYPICAL SECTION

NTS

PROPOSED INTERIOR SUBDIVISION STREET CLASSIFICATION: TYPE 4 LOCAL PROPOSED FOR ALL ROADWAYS.

## LEGEND

| | |
|---|---|
| 21' | EXISTING CONTOUR LINES |
| C.B. | CATCH BASIN |
| 21.33' | PROPOSED GRADE |
| | PROPOSED HYDRANT ASSEMBLY |
| | PROPOSED WATER SERVICE & METERS |
| | PROPOSED GATE VALVE |
| B.O. | PROPOSED BLOW OFF |
| M.H. | PROPOSED MANHOLE |
| | SILTATION FENCE |
| | DRAINAGE FLOW ARROW |
| C.L.F. | EXISITNG 6' CHAIN LINK FENCE |
| | PROPOSED GRASS/PERVIOUS |

M.H. = MAN HOLE
C.B. = CATCH BASIN
W.M. = WATER MAIN

EAST 1/2
TRACT 16
2.91 ACRES

(PHASE 2) 03-26-16-0070-01600-0010

PROPOSED GRADING PLAN
SHEET 11 OF 28

MAGNOLIA OAKS
7240 MASSACHUSETTS AVE.
NEW PORT RICHEY, FL 34653

| REV | DATE | DESCRIPTION |
|---|---|---|

SUBMITTAL DATE:

SCALE: 1" = 30.00'

GALEN JAY HOFMANN , P. E.
8620 AIRWAY BLVD.
NEW PORT RICHEY, FL 34654
P: 727-844-7686
F: 727-844-7626

GALEN J. HOFMANN P.E.
CONSULTING CIVIL ENGINEER

GALEN J. HOFMANN , P.E. # 21796
NOT VALID UNLESS EMBOSSED WITH A RAISED SEAL

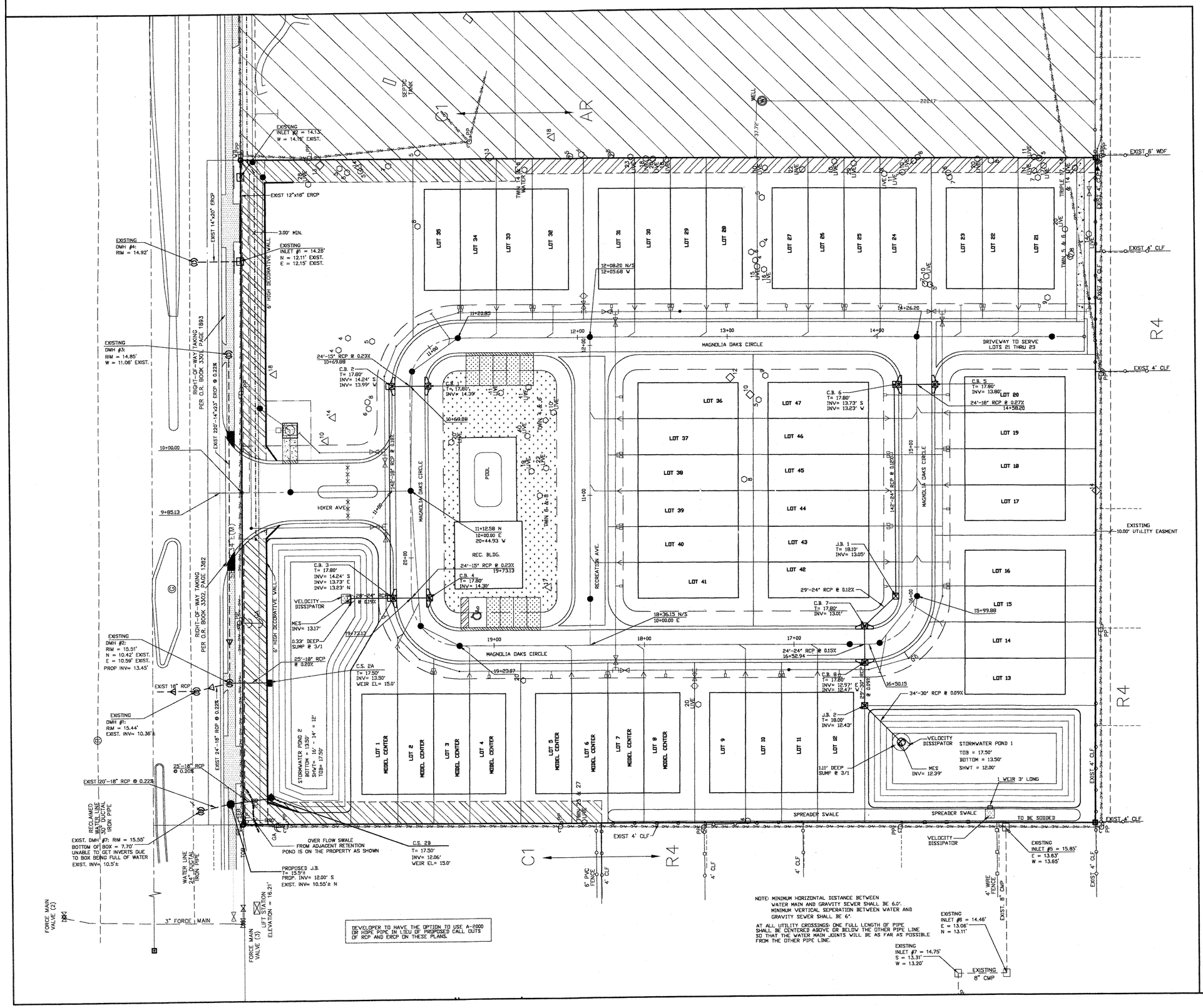


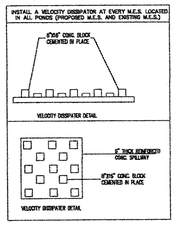


1" = 30'

EXIST. GRATE INLET ELEVATIONS WITH INVERTS:

INLET #1 = 14.26'
N = 12.11'
E = 12.15'

INLET #2 = 14.13'
W = 14.15'

INLET #3 = 15.89'
E = 13.86'

INLET #4 = 15.66'
W = 13.42'
N = 13.29'

INLET #5 = 15.85'
E = 13.63'
W = 13.65'

INLET #6 = 14.46'
E = 13.06'
N = 13.11'

INLET #7 = 14.75'
S = 13.31'
W = 13.20'

EXIST. DRAINAGE MAN HOLE RIM ELEVATIONS WITH INVERTS:

DMH #1: RIM = 15.44'

DMH #2: RIM = 15.51'
N = 10.42'
E = 10.59'

DMH #3: RIM = 14.85'
W = 11.06'

DMH #4: RIM = 14.92'

DMH #5: RIM = 17.01'
N = 10.02'
NE = 9.79'

DMH #6: RIM = 17.08'
SW = 9.96'
E = 9.88'

DMH #7: RIM = 15.55'
BOTTOM OF BOX = 7.70'
UNABLE TO GET INVERTS DUE TO BOX BEING FULL OF WATER

## LEGEND

| | |
|---|---|
| 21 | EXISTING CONTOUR LINES |
| C.B. | CATCH BASIN |
| 2L33' | PROPOSED GRADE |
| | PROPOSED HYDRANT ASSEMBLY |
| | PROPOSED WATER SERVICE & METERS |
| | PROPOSED GATE VALVE |
| B.O. | PROPOSED BLOW OFF |
| M.H. | PROPOSED MANHOLE |
| | SILTATION FENCE |
| | DRAINAGE FLOW ARROW |
| C.L.F. | EXISITNG 6' CHAIN LINK FENCE |
| | PROPOSED GRASS/PERVIOUS |

M.H. = MAN HOLE
C.B. = CATCH BASIN
W.M. = WATER MAIN

(PHASE 1) TRACT 17
03-26-16-0070-01700-0010
03-26-16-0070-01700-0020
03-26-16-0070-01700-0030

NOTE: MINIMUM HORIZONTAL DISTANCE BETWEEN WATER MAIN AND GRAVITY SEWER SHALL BE 6.0'. MINIMUM VERTICAL SEPERATION BETWEEN WATER AND GRAVITY SEWER SHALL BE 6'.

AT ALL UTILITY CROSSINGS ONE FULL LENGTH OF PIPE SHALL BE CENTERED ABOVE OR BELOW THE OTHER PIPE LINE SO THAT THE WATER MAIN JOINTS WILL BE AS FAR AS POSSIBLE FROM THE OTHER PIPE LINE.

DEVELOPER TO HAVE THE OPTION TO USE A-2000 OR HDPE PIPE IN LIEU OF PROPOSED CALL OUTS OF RCP AND ERCP ON THESE PLANS.

PROPOSED STORMWATER DRAINAGE PLAN
SHEET 12 OF 28

MAGNOLIA OAKS
7240 MASSACHUSETTS AVE.
NEW PORT RICHEY, FL 34653

| REV | DATE | DESCRIPTION |
|---|---|---|
| | | |
| | | |
| | | |

SUBMITTAL DATE:

SCALE: 1" = 30.00'

GALEN JAY HOFMANN , P. E.
8620 AIRWAY BLVD.
NEW PORT RICHEY, FL 34654
P: 727-844-7686
F: 727-844-7626

GALEN J. HOFMANN P.E.
CONSULTING CIVIL ENGINEER
GALEN J. HOFMANN , P.E. # 21795
NOT VALID UNLESS EMBOSSED WITH A RAISED SEAL

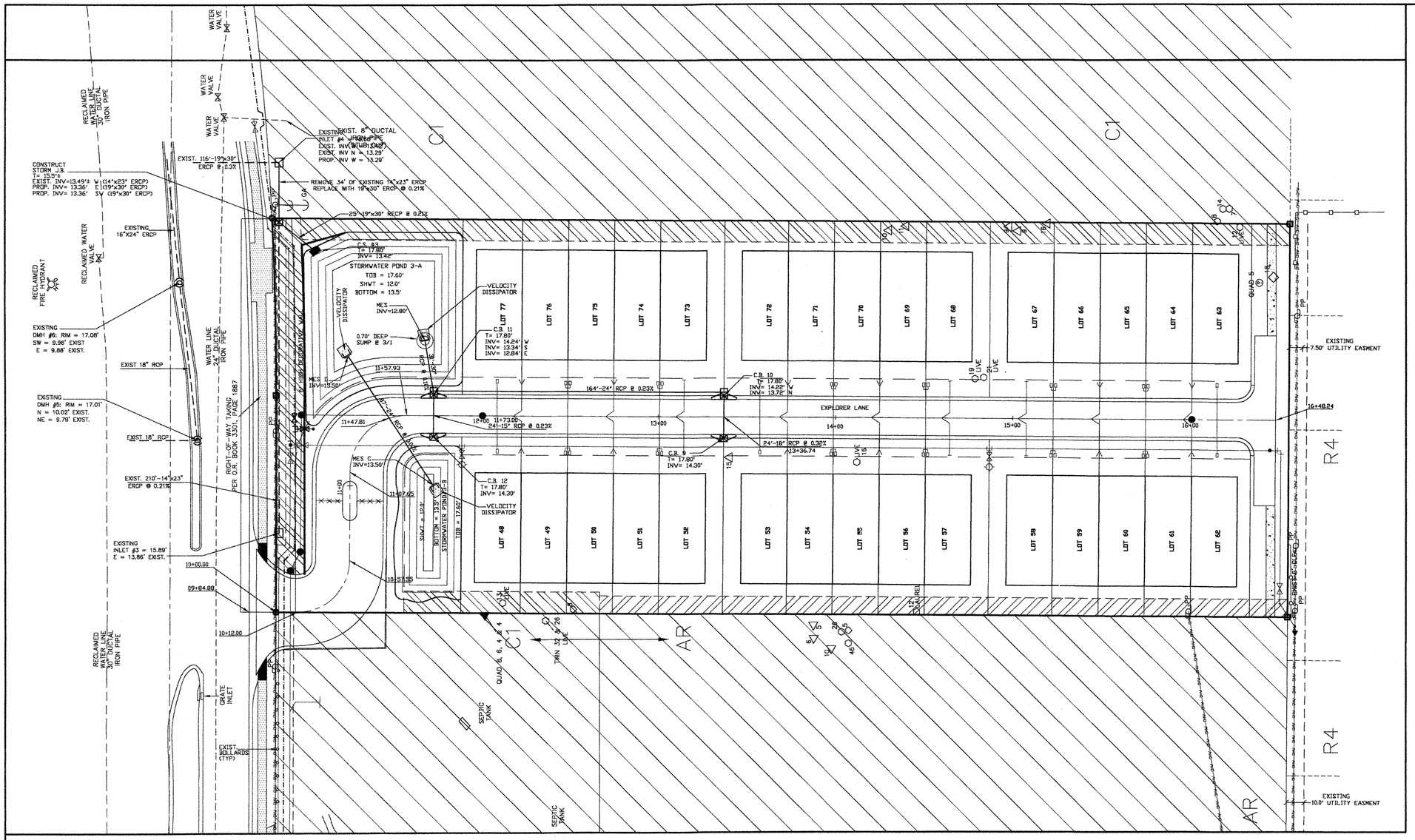


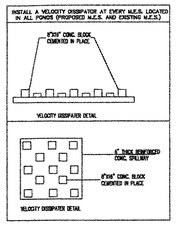


N

1" = 30'

EXIST. GRATE INET ELEVATIONS WITH INVERTS:

INLET #1 = 14.26'
N = 12.11'
E = 12.15'

INLET #2 = 14.13'
W = 14.15'

INLET #3 = 15.89'
E = 13.86'

INLET #4 = 15.66'
W = 13.42'
N = 13.29'

INLET #5 = 15.85'
E = 13.63'
W = 13.65'

INLET #6 = 14.46'
E = 13.06'
N = 13.11'

INLET #7 = 14.75'
S = 13.31'
W = 13.20'

EXIST. DRAINAGE MAN HOLE RIM ELEVATIONS WITH INVERTS:

DMH #1: RIM = 15.44'

DMH #2: RIM = 15.51'
N = 10.42'
E = 10.59'

DMH #3: RIM = 14.85'
W = 11.06'

DMH #4: RIM = 14.92'

DMH #5: RIM = 17.01'
N = 10.02'
NE = 9.79'

DMH #6: RIM = 17.08'
SW = 9.96'
E = 9.88'

DMH #7: RIM = 15.55'
BOTTOM OF BOX = 7.70'
UNABLE TO GET INVERTS DUE TO BOX BEING FULL OF WATER

DEVELOPER TO HAVE THE OPTION TO USE A-2000 OR HDPE PIPE IN LIEU OF PROPOSED CALL OUTS OF RCP AND ERCP ON THESE PLANS.

## LEGEND

| | |
|---|---|
| 21' | EXISTING CONTOUR LINES |
| C.B. | CATCH BASIN |
| 21.93' | PROPOSED GRADE |
| | PROPOSED HYDRANT ASSEMBLY |
| | PROPOSED WATER SERVICE & METERS |
| | PROPOSED GATE VALVE |
| B.O. | PROPOSED BLOW OFF |
| M.H. | PROPOSED MANHOLE |
| | SILTATION FENCE |
| | DRAINAGE FLOW ARROW |
| C.L.F. | EXISITNG 6' CHAIN LINK FENCE |
| | PROPOSED GRASS/PERVIOUS |

M.H. = MAN HOLE
C.B. = CATCH BASIN
W.M. = WATER MAIN

NOTE: MINIMUM HORIZONTAL DISTANCE BETWEEN WATER MAIN AND GRAVITY SEWER SHALL BE 6.0'. MINIMUM VERTICAL SEPERATION BETWEEN WATER AND GRAVITY SEWER SHALL BE 6".

AT ALL UTILITY CROSSINGS: ONE FULL LENGTH OF PIPE SHALL BE CENTERED ABOVE OR BELOW THE OTHER PIPE LINE SO THAT THE WATER MAIN JOINTS WILL BE AS FAR AS POSSIBLE FROM THE OTHER PIPE LINE.

EAST 1/2
TRACT 16
2.91 ACRES

(PHASE 2) 03-26-16-0070-01600-0010

PROPOSED STORMWATER DRAINAGE PLAN
SHEET 13 OF 28

MAGNOLIA OAKS
7240 MASSACHUSETTS AVE.
NEW PORT RICHEY, FL 34653

SUBMITTAL DATE:

| REV | DATE | DESCRIPTION |
|---|---|---|

SCALE: 1" = 30.00'

GALEN JAY HOFMANN , P. E.
8629 AIRWAY BLVD.
NEW PORT RICHEY, FL 34654
P: 727-844-7686
F: 727-844-7626

GALEN J. HOFMANN P.E.
CONSULTING CIVIL ENGINEER
5-1-08
GALEN J. HOFMANN , P.E. # 21789
NOT VALID UNLESS EMBOSSED WITH A RAISED SEAL

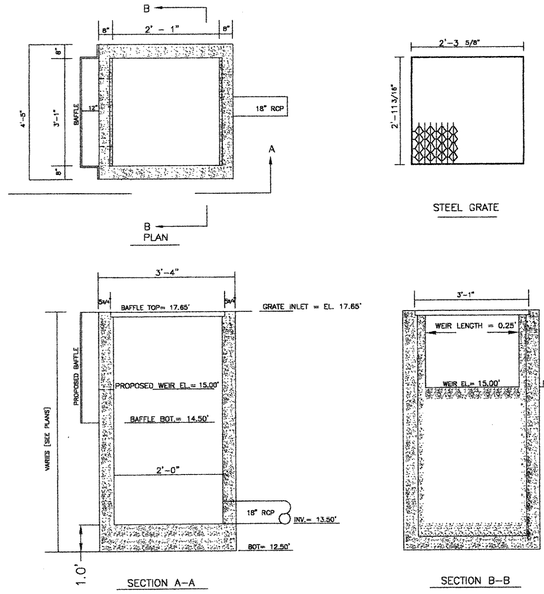


NOTES:

1. SEE F.D.O.T. INDEX NO. 232 FOR: STEEL GRATE SPECS.,STEEL REINFORCEMENT AND ADDITIONAL SPECIFICATIONS

2. SEE F.D.O.T. INDEX NO. 201 FOR: EYE BOLT AND CHAIN FOR LOCKING GRATE TO INLET LADDER BARS AND ADDITIONAL SPECIFICATIONS

CONTROL STRUCTURE

[F.D.O.T. INDEX NO. 232 ]

TYPE "C"

CONTROL STRUCTURE #2A

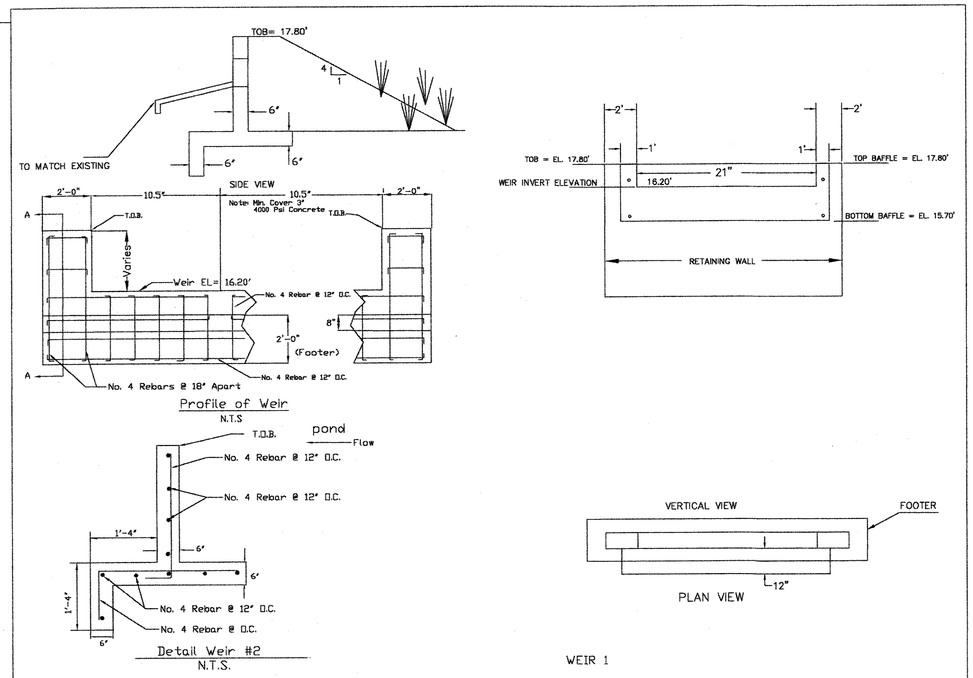


CONTROL STRUCTUR AND POND INFORMATION DETAILS (TYP)

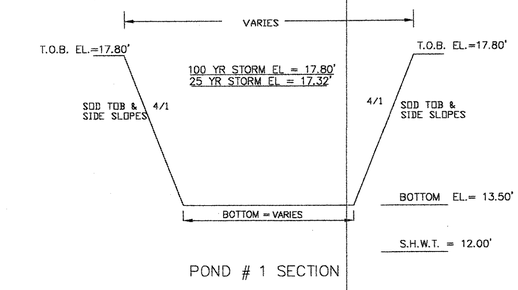


POND # 1 SECTION

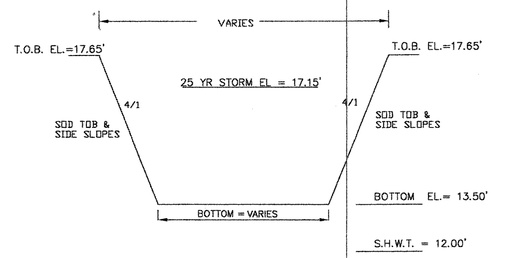


POND # 2 SECTION

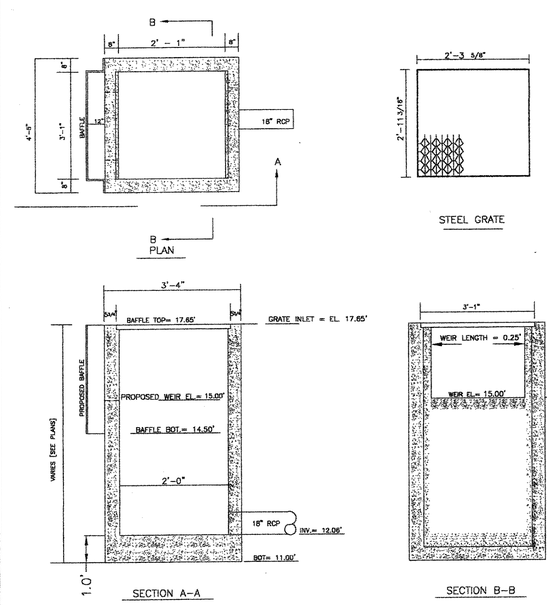


NOTES:

1. SEE F.D.O.T. INDEX NO. 232 FOR: STEEL GRATE SPECS.,STEEL REINFORCEMENT AND ADDITIONAL SPECIFICATIONS

2. SEE F.D.O.T. INDEX NO. 201 FOR: EYE BOLT AND CHAIN FOR LOCKING GRATE TO INLET LADDER BARS AND ADDITIONAL SPECIFICATIONS

CONTROL STRUCTURE

[F.D.O.T. INDEX NO. 232 ]

TYPE "C"

CONTROL STRUCTURE #2B

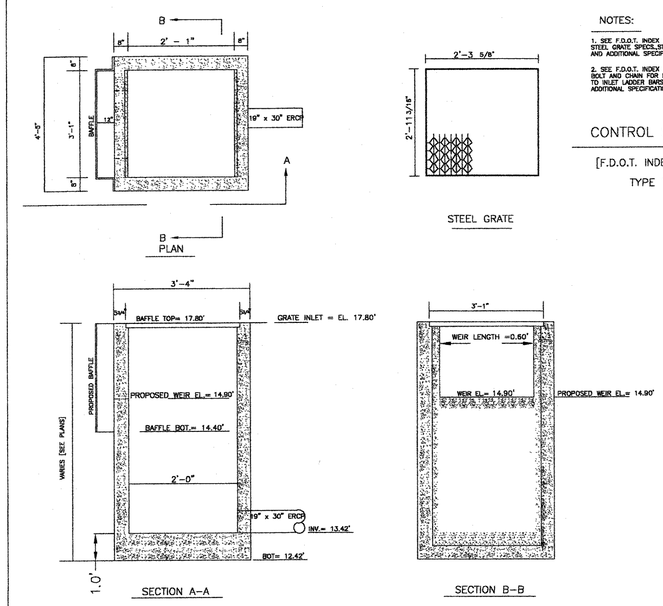


NOTES:

1. SEE F.D.O.T. INDEX NO. 232 FOR: STEEL GRATE SPECS.,STEEL REINFORCEMENT AND ADDITIONAL SPECIFICATIONS

2. SEE F.D.O.T. INDEX NO. 201 FOR: EYE BOLT AND CHAIN FOR LOCKING GRATE TO INLET LADDER BARS AND ADDITIONAL SPECIFICATIONS

CONTROL STRUCTURE

[F.D.O.T. INDEX NO. 232 ]

TYPE "C"

CONTROL STRUCTURE #3

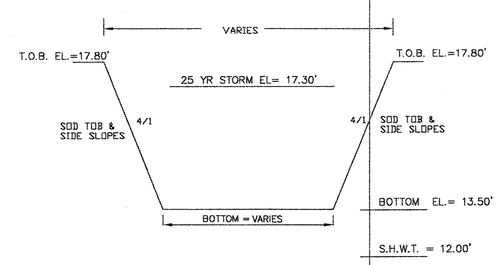


POND # 3A & 3B SECTION

CONTROL STRUCTURES AND POND SECTIONS
SHEET 13-A OF 28

MAGNOLIA OAKS
7240 MASSACHUSETTS AVE.
NEW PORT RICHEY, FL 34653

SUBMITTAL DATE:

| REV | DATE | DESCRIPTION |
|---|---|---|

SCALE: 1" = 50.00'

GALEN JAY HOFMANN , P. E.
8620 AIRWAY BLVD.
NEW PORT RICHEY, FL 34654
P: 727-844-7686
F: 727-844-7626

GALEN J. HOFMANN P.E.
CONSULTING CIVIL ENGINEER
5-1-98
GALEN J. HOFMANN , P.E. # 21796
NOT VALID UNLESS EMBOSSED WITH A RAISED SEAL

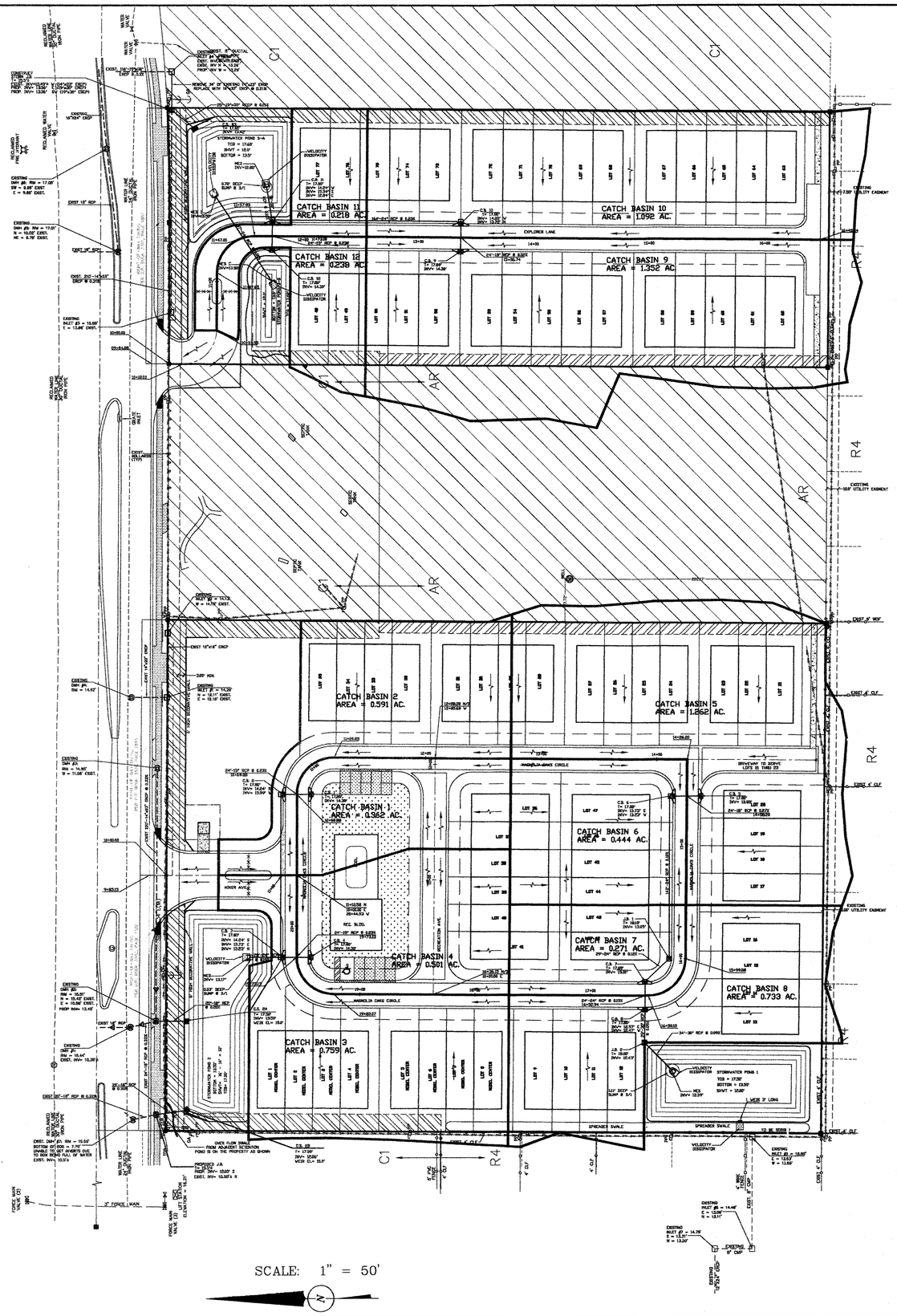


SCALE: 1" = 50'

LEGEND:

A/C = AIR CONDITIONER, BFP = BACK FLOW PREVENTOR, BSL = BUILDING SETBACK LINE, (C) = CALCULATED, C# = CURVE NUMBER (SEE CURVE TABLE), CB = CABLE BOX, CLP = CONCRETE LIGHT POLE, C/S = CONCRETE SLAB, CLF = CHAIN LINK FENCE, CI = CURB INLET, CONC = CONCRETE, CSW = CONCRETE SIDEWALK, (D) = DEED, DE = DRAINAGE EASEMENT, DMH = DRAINAGE MANHOLE, EB = ELECTRIC BOX, EOL = EDGE OF LIMEROCK, EOW = EDGE OF WATER, E/P = EDGE OF PAVEMENT, (F) = FIELD, F/C = FENCE CORNER, FCC = FOUND CROSS CUT, FCM = FOUND CONCRETE MONUMENT, FFE = FINISHED FLOOR ELEVATION, FIP = FOUND IRON PIPE, FIR = FOUND IRON ROD, FN = FOUND NAIL, FND = FOUND NAIL AND DISK, FPC = FLORIDA POWER CORPORATION, GA = GUY ANCHOR, GI = GRATE INLET, ID = IDENTIFICATION, IE = INGRESS & EGRESS EASEMENT, INV = INVERT, LB = LICENSED BUSINESS, LP = LIGHT POLE, (M) = MEASURED, MH = MANHOLE, MP = METER POLE, OHW = OVERHEAD WIRE, O/A = OVER ALL, (P) = PLAT, PC = POINT OF CURVATURE, PCP = PERMANENT CONTROL POINT, PI = POINT OF INTERSECTION, PP = POWER POLE, POB = POINT OF BEGINNING, POC = POINT OF COMMENCEMENT, PRC = POINT OF REVERSE CURVE, PRM = PERMANENT REFERENCE MONUMENT, PT = POINT OF TANGENT, PSM = PROFESSIONAL SURVEYOR AND MAPPER, R/W = RIGHT OF WAY, SIR = SET 5/8" IRON ROD LB 7079, SMH = SANITARY MANHOLE, SND = SET NAIL AND DISK LB 7079, TNF = TRANSFORMER, TOB = TOP OF BANK, TP = TELEPHONE PEDESTAL, UE = UTILITY EASEMENT, WB = WATER BOX, WDF = WOOD FENCE, VA = VALVE, WV = WATER VALVE

CONSTRUCTION PLAN SUBMITTAL

PROPOSED CATCH BASIN AREA PLAN

SHEET 14 OF 28

MAGNOLIA OAKS
7240 MASSACHUSETTS AVE.
NEW PORT RICHEY, FL 34653

(PHASE 1)
03-26-16-0070-01700-0010
03-26-16-0070-01700-0020
03-26-16-0070-01700-0030

(PHASE 2)
03-26-16-0070-01600-0010

| REV | DATE | DESCRIPTION |
|---|---|---|
| 02 | 8/14/08 | PER SWFWMD |
| 01 | 7/24/08 | PER PASCO COUNTY & SWFWMD |
| 00 | 5/09/08 | INITIAL SUBMITTAL |

SUBMITTAL DATE:

SCALE: 1" = 50.00'

GALEN JAY HOFMANN , P. E.
8620 AIRWAY BLVD.
NEW PORT RICHEY, FL 34654
P: 727-844-7686
F: 727-844-7626

GALEN J. HOFMANN P.E.
CONSULTING CIVIL ENGINEER

5-1-08

GALEN J. HOFMANN, P.E. # 31796
NOT VALID UNLESS EMBOSSED WITH A RAISED SEAL

# SECTION 3, TOWNSHIP 26 SOUTH, RANGE 16 EAST

LEGAL DESCRIPTION:
TRACT 17 AND THE EAST 1/2 OF TRACT 16, PORT RICHEY LAND COMPANY SUBDIVISION, ACCORDING TO THE PLAT THEREOF AS RECORDED IN PLAT BOOK 1, PAGES 60 & 61 OF THE PUBLIC RECORDS OF PASCO COUNTY, FLORIDA.

CERTIFIED TO:
CASSWELL, INC., A FLORIDA CORPORATION
RICHEAR C. WILLIAMS, JR., P.A.
ATTORNEYS TITLE INSURANCE FUND, INC.
BASIS OF BEARING IS BASED ON THE NORTH BOUNDARY LINE OF SECTION 3, TOWNSHIP 26 SOUTH, RANGE 16 EAST.

NOTE:
ELEVATIONS ARE SHOWN AS SUCH × 16.2' AND ARE BASED ON THE NATIONAL GEODETIC VERTICAL DATUM OF 1929 AS ESTABLISHED FROM POLARIS BENCH MARK # Z-63339, FOUND NAIL & DISK EAST SIDE OF KEENA STREET 400.00'± SOUTH OF MASSACHUSETTS AVENUE, ELEVATION = 22.03'

*= PERMANENT DRAINAGE EASEMENT PER O.R. BOOK 3301, PAGE 1896

** = PERMANENT DRAINAGE EASEMENT PER O.R. BOOK 3301, PAGE 1890

*** = INGRESS/EGRESS EASEMENT PER O.R. BOOK 3273, PAGE 0947

****= INGRESS/EGRESS EASEMENT PER O.R. BOOK 3273, PAGE 0940

Ⓓ = DRAINAGE MAN HOLE
Ⓖ = GTE MAN HOLE
Ⓡ = RECLAIMED WATER MAN HOLE

TREE LEGEND (SIZES ARE NOTED IN INCHES)

- ○ = CRAPE MYRTLE
- ▷ = CHERRY LAUREL
- ○ = OAK
- ▽ = CEDAR
- △ = PINE
- ◇ = PALM
- ◁ = CHINA BERRY
- ◇ = ELF EAR
- ⑦ = UNKNOWN
- ○ = CAMPHOR
- ● = MULBERRY
- ▶ = GOLDEN RAIN
- ◀ = RAIN TREE

DRAINAGE MAN HOLE RIM ELEVATIONS WITH INVERTS:

DMH #1: RIM = 15.44'

DMH #2: RIM = 15.51'
N = 10.42'
E = 10.59'

DMH #3: RIM = 14.85'
W = 11.06'

DMH #4: RIM = 14.92'

DMH #5: RIM = 17.01'
N = 10.02'
NE = 9.79'

DMH #6: RIM = 17.08'
SW = 9.96'
E = 9.88'

DMH #7: RIM = 15.55'
BOTTOM OF BOX = 7.70'
UNABLE TO GET INVERTS DUE TO BOX BEING FULL OF WATER

GRATE INET ELEVATIONS WITH INVERTS:

INLET #1 = 14.26'
N = 12.11'
E = 12.15'

INLET #2 = 14.13'
W = 14.15'

INLET #3 = 15.89'
E = 13.86'

INLET #4 = 15.66'
W = 13.42'
N = 13.29'

INLET #5 = 15.85'
E = 13.63'
W = 13.65'

INLET #6 = 14.46'
E = 13.06'
N = 13.11'

INLET #7 = 14.75'
S = 13.31'
W = 13.20'

SCALE: 1" = 40'

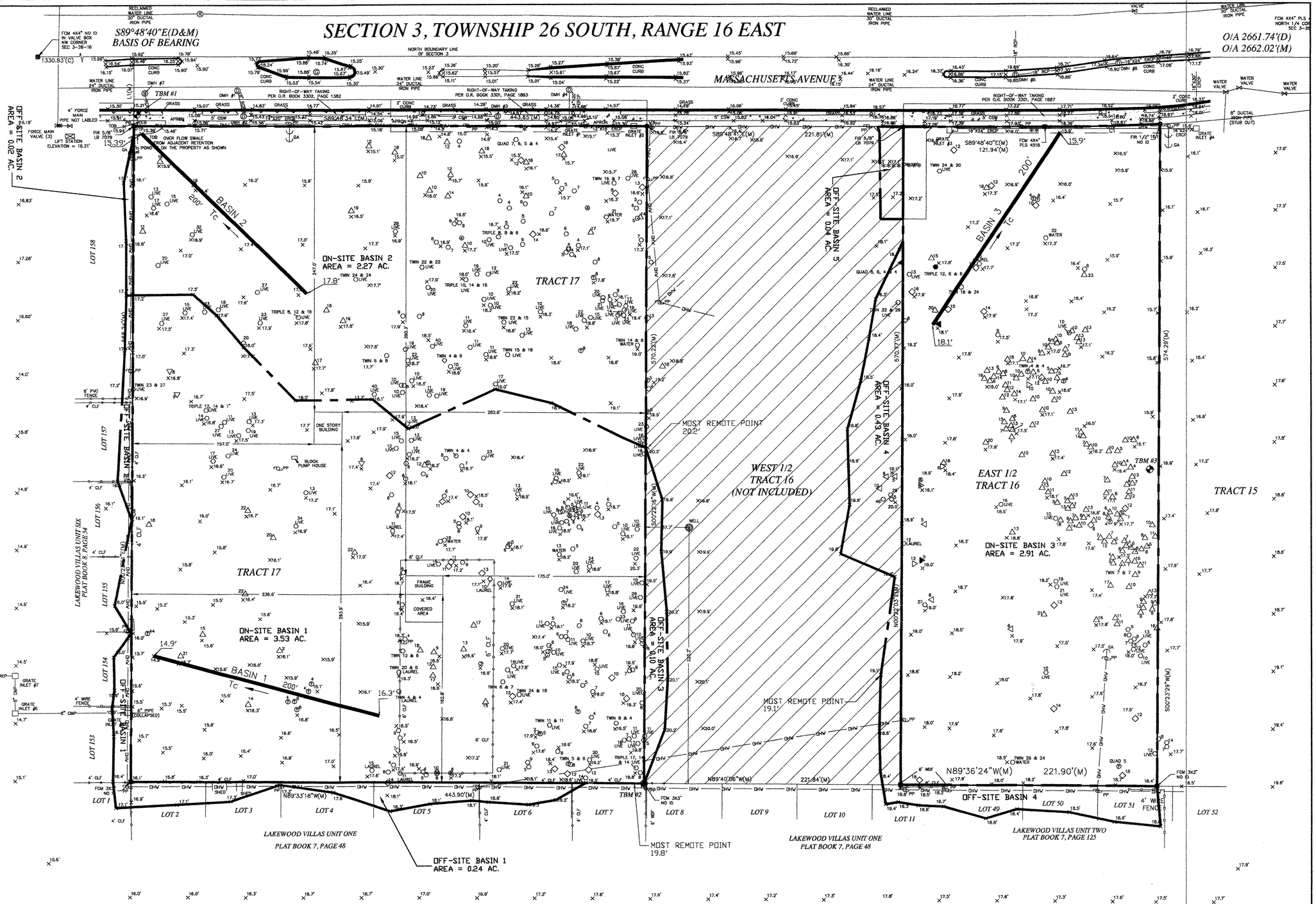


PRELIMINARY & CONSTRUCTION PLAN SIMULTANEOUS SUBMITTAL

| | | | |
|---|---|---|---|
| PRE-DRAINAGE BASIN MAP<br>SHEET 15 OF 28 | | | MAGNOLIA OAKS<br>7240 MASSACHUSETTS AVE.<br>NEW PORT RICHEY, FL 34653 |
| | | | SUBMITTAL DATE: |
| 00 | 5/09/06 | INITIAL SUBMITTAL | |
| REV | DATE | DESCRIPTION | SCALE: 1" = 50.00' |


GALEN JAY HOFMANN , P. E.
8620 AIRWAY BLVD.
NEW PORT RICHEY, FL 34654
P: 727-844-7696
F: 727-844-7626


GALEN J. HOFMANN P.E.
CONSULTING CIVIL ENGINEER
5-1-08
GALEN J. HOFMANN , P.E. # 21798
NOT VALID UNLESS EMBOSSED WITH A RAISED SEAL

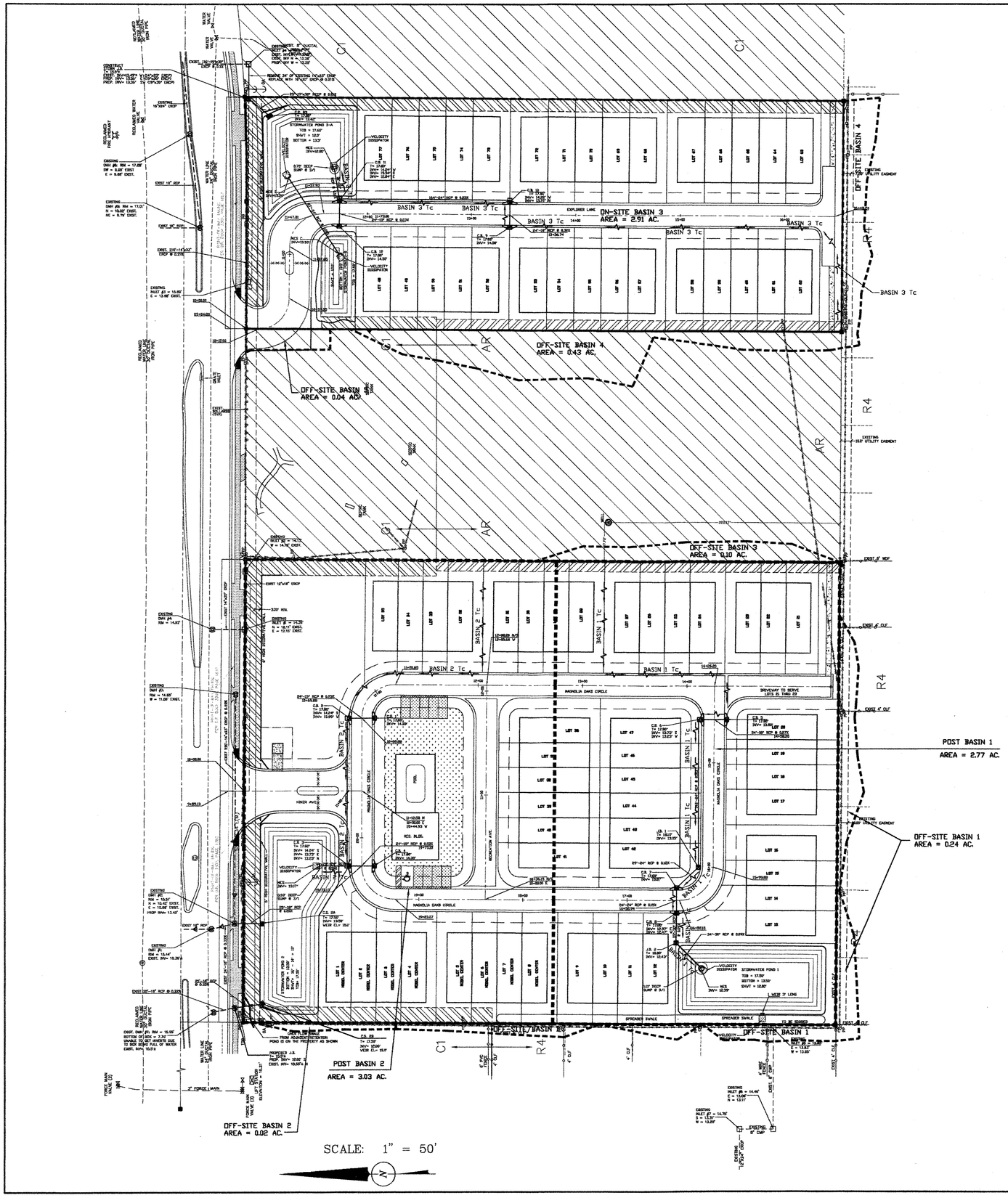


LEGEND:

A/C = AIR CONDITIONER, BFP = BACK FLOW PREVENTOR, BSL = BUILDING SETBACK LINE, (C) = CALCULATED, C# = CURVE NUMBER (SEE CURVE TABLE), CB = CABLE BOX, CLP = CONCRETE LIGHT POLE, C/S = CONCRETE SLAB, CLF = CHAIN LINK FENCE, CI = CURB INLET, CONC = CONCRETE, CSW = CONCRETE SIDEWALK, (D) = DEED, DE = DRAINAGE EASEMENT, DMH = DRAINAGE MANHOLE, EB = ELECTRIC BOX, EOL = EDGE OF LIMEROCK, EOW = EDGE OF WATER, E/P = EDGE OF PAVEMENT, (F) = FIELD, F/C = FENCE CORNER, FCC = FOUND CROSS CUT, FCM = FOUND CONCRETE MONUMENT, FFE = FINISHED FLOOR ELEVATION, FIP = FOUND IRON PIPE, FIR = FOUND IRON ROD, FN = FOUND NAIL, FND = FOUND NAIL AND DISK, FPC = FLORIDA POWER CORPORATION, GA = GUY ANCHOR, GI = GRATE INLET, ID = IDENTIFICATION, IE = INGRESS & EGRESS EASEMENT, INV = INVERT, LB = LICENSED BUSINESS, LP = LIGHT POLE, (M) = MEASURED, MH = MANHOLE, MP = METER POLE, OHW = OVERHEAD WIRE, O/A = OVER ALL, (P) = PLAT, PC = POINT OF CURVATURE, PCP = PERMANENT CONTROL POINT, PI = POINT OF INTERSECTION, PP = POWER POLE, POB = POINT OF BEGINNING, POC = POINT OF COMMENCEMENT, PRC = POINT OF REVERSE CURVE, PRM = PERMANENT REFERENCE MONUMENT, PT = POINT OF TANGENT, PSM = PROFESSIONAL SURVEYOR AND MAPPER, R/W = RIGHT OF WAY, SIR = SET 5/8" IRON ROD LB 7079, SMI = SANITARY MANHOLE, SND = SET NAIL AND DISK LB 7079, TNF = TRANSFORMER, TOB = TOP OF BANK, TP = TELEPHONE PEDESTAL, UE = UTILITY EASEMENT, WB = WATER BOX, WDF = WOOD FENCE, VA = VALVE, WV = WATER VALVE

CONSTRUCTION PLAN SUBMITTAL

POST DEVELOPED BASIN PLAN

SHEET 16 OF 28

MAGNOLIA OAKS
7240 MASSACHUSETTS AVE.
NEW PORT RICHEY, FL 34653

| REV | DATE | DESCRIPTION |
|---|---|---|
| 02 | 8/14/06 | PER SWFWMD |
| 01 | 7/24/06 | PER PASCO COUNTY & SWFWMD |
| 00 | 5/09/06 | INITIAL SUBMITTAL |

SUBMITTAL DATE:

SCALE: 1" = 50.00'

(PHASE 1)
03-26-16-0070-01700-0010
03-26-16-0070-01700-0020
03-26-16-0070-01700-0030

(PHASE 2)
03-26-16-0070-01600-0010

GALEN JAY HOFMANN , P. E.
8620 AIRWAY BLVD.
NEW PORT RICHEY, FL 34654
P: 727-844-7686
F: 727-844-7625

GALEN J. HOFMANN P.E.
CONSULTING CIVIL ENGINEER

5-1-08

GALEN J. HOFMANN P.E. # 21798
NOT VALID UNLESS EMBOSSED WITH A RAISED SEAL

1" = 30'

PROPOSED PRIVATE 10.00' WIDE UTILITY EASEMENT CROSS SECTION ALONG THE NORTH PORTION OF THE WEST 1/2 OF TRACT 16.

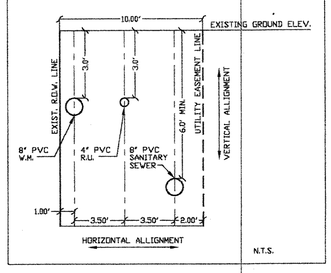


PASCO COUNTY FIRE DEPARTMENT NOTES:

FIRE HYDRANTS SHALL BE INSTALLED AND IN SERVICE PRIOR TO THE ACCUMULATION OF COMBUSTIBLES.

PER NFPA-1, 16.4.3.1.3 WHERE UNDERGROUND WATER MAINS AND HYDRANTS ARE TO BE PROVIDED, THEY SHALL BE INSTALLED, COMPLETED, AND IN SERVICE PRIOR TO CONSTRUCTION WORK.

## LEGEND

| | |
|---|---|
| 21' | EXISTING CONTOUR LINES |
| C.B. | CATCH BASIN |
| 21.33' | PROPOSED GRADE |
| | PROPOSED HYDRANT ASSEMBLY |
| | PROPOSED WATER SERVICE & METERS |
| | PROPOSED GATE VALVE |
| B.O. | PROPOSED BLOW OFF |
| M.H. | PROPOSED MANHOLE |
| | SILTATION FENCE |
| | DRAINAGE FLOW ARROW |
| C.L.F. | EXISITNG 6' CHAIN LINK FENCE |
| | PROPOSED GRASS/PERVIOUS |

M.H. = MAN HOLE
C.B. = CATCH BASIN
W.M. = WATER MAIN

(PHASE 1) TRACT 17
03-26-16-0070-01700-0010
03-26-16-0070-01700-0020
03-26-16-0070-01700-0030

POTABLE WATER & SANITARY SEWER PLAN
SHEET 17 OF 28

MAGNOLIA OAKS
7240 MASSACHUSETTS AVE.
NEW PORT RICHEY, FL 34653

SUBMITTAL DATE:

| REV | DATE | DESCRIPTION |
|---|---|---|

SCALE: 1" = 30.00'


GALEN JAY HOFMANN , P. E.
8620 AIRWAY BLVD.
NEW PORT RICHEY, FL 34654
P: 727-844-7686
F: 727-844-7526


GALEN J. HOFMANN P.E.
CONSULTING CIVIL ENGINEER
GALEN J. HOFMANN , P.E. # 21786
NOT VALID UNLESS EMBOSSED WITH A RAISED SEAL
5-7-08

| LINE TABLE | | |
|---|---|---|
| LINE | LENGTH | BEARING |
| L1(M) | 60.00 | N00°23'53"E |

| CURVE TABLE | | | | | | |
|---|---|---|---|---|---|---|
| CURVE | TANGENT | LENGTH | RADIUS | DELTA | CHORD | CHORD BEARING |
| C1(M) | 50.00 | 99.97 | 1687.00 | 3°23'43" | 99.95 | N88°46'50"E |

* = PERMANENT DRAINAGE EASEMENT PER O.R. BOOK 3301, PAGE 1896

** = PERMANENT DRAINAGE EASEMENT PER O.R. BOOK 3301, PAGE 1890

*** = INGRESS/EGRESS EASEMENT PER O.R. BOOK 3273, PAGE 0947

**** = INGRESS/EGRESS EASEMENT PER O.R. BOOK 3273, PAGE 0940

NOTE: MINIMUM HORIZONTAL DISTANCE BETWEEN WATER MAIN AND GRAVITY SEWER SHALL BE 6.0'. MINIMUM VERTICAL SEPERATION BETWEEN WATER AND GRAVITY SEWER SHALL BE 6'.

AT ALL UTILITY CROSSINGS: ONE FULL LENGTH OF PIPE SHALL BE CENTERED ABOVE OR BELOW THE OTHER PIPE LINE SO THAT THE WATER MAIN JOINTS WILL BE AS FAR AS POSSIBLE FROM THE OTHER PIPE LINE.

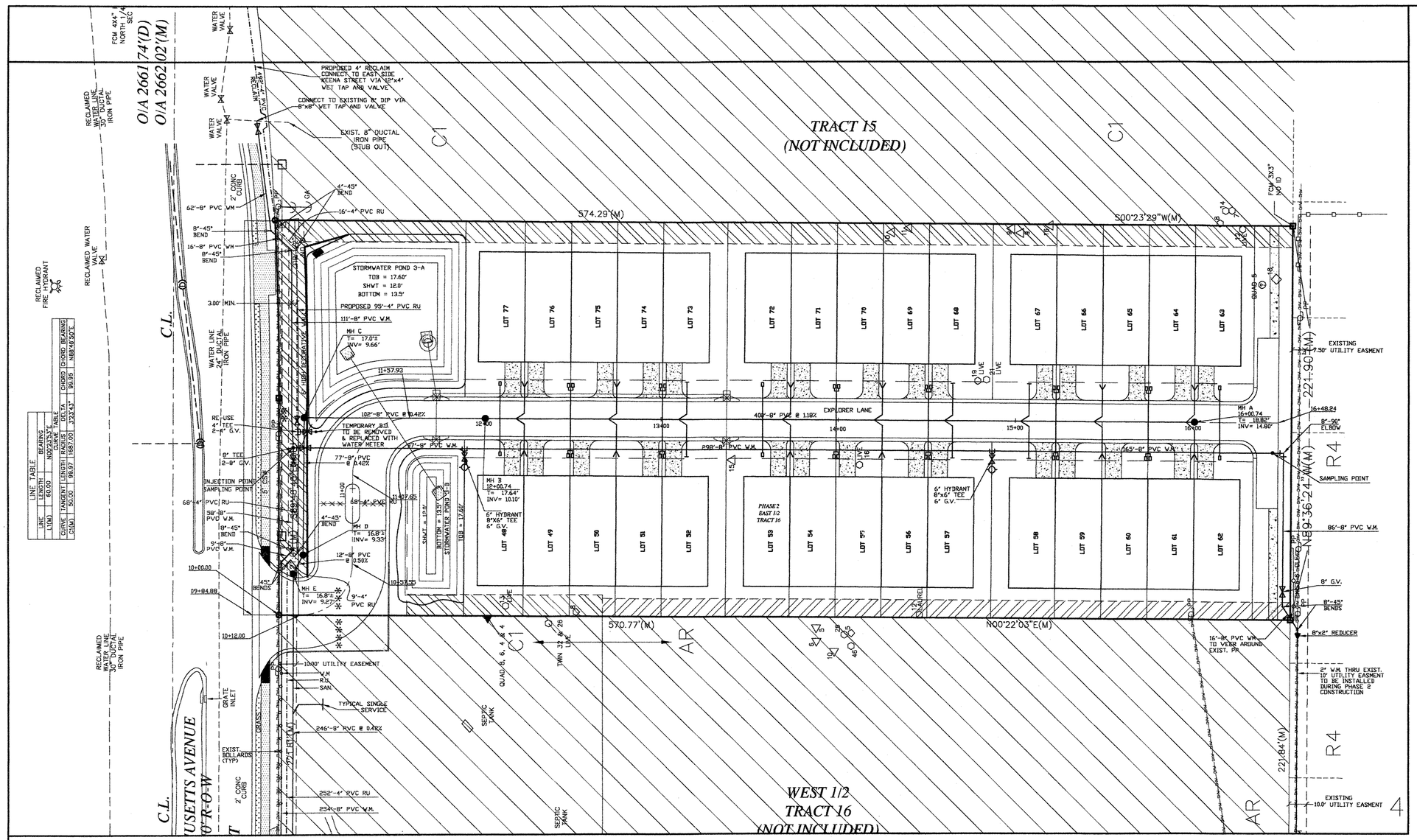


1" = 30'

PASCO COUNTY FIRE DEPARTMENT NOTES:

FIRE HYDRANTS SHALL BE INSTALLED AND IN SERVICE PRIOR TO THE ACCUMULATION OF COMBUSTIBLES.

PER NFPA-1, 16.4.3.1.3: WHERE UNDERGROUND WATER MAINS AND HYDRANTS ARE TO BE PROVIDED, THEY SHALL BE INSTALLED, COMPLETED, AND IN SERVICE PRIOR TO CONSTRUCTION WORK.

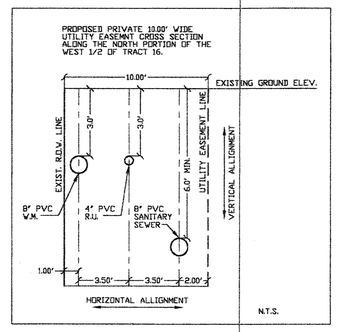


| LINE TABLE | | |
|---|---|---|
| LINE | LENGTH | BEARING |
| L1(M) | 60.00 | N00°23'29"E |

| CURVE TABLE | | | | | | |
|---|---|---|---|---|---|---|
| CURVE | TANGENT | LENGTH | RADIUS | DELTA | CHORD | CHORD BEARING |
| C1(M) | 50.00 | 99.97 | 1657.00 | 3°27'14" | 99.95 | N89°18'50"E |

## LEGEND

| | |
|---|---|
| 21' | EXISTING CONTOUR LINES |
| C.B. | CATCH BASIN |
| 21.33' | PROPOSED GRADE |
| | PROPOSED HYDRANT ASSEMBLY |
| | PROPOSED WATER SERVICE & METERS |
| | PROPOSED GATE VALVE |
| B.O. | PROPOSED BLOW OFF |
| M.H. | PROPOSED MANHOLE |
| | SILTATION FENCE |
| | DRAINAGE FLOW ARROW |
| C.L.F. | EXISITNG 6' CHAIN LINK FENCE |
| | PROPOSED GRASS/PERVIOUS |

M.H. = MAN HOLE
C.B. = CATCH BASIN
W.M. = WATER MAIN

* = PERMANENT DRAINAGE EASEMENT PER O.R. BOOK 3301, PAGE 1896

** = PERMANENT DRAINAGE EASEMENT PER O.R. BOOK 3301, PAGE 1890

*** = INGRESS/EGRESS EASEMENT PER O.R. BOOK 3273, PAGE 0947

**** = INGRESS/EGRESS EASEMENT PER O.R. BOOK 3273, PAGE 0940

NOTE: MINIMUM HORIZONTAL DISTANCE BETWEEN WATER MAIN AND GRAVITY SEWER SHALL BE 6.0'. MINIMUM VERTICAL SEPERATION BETWEEN WATER AND GRAVITY SEWER SHALL BE 6'.

AT ALL UTILITY CROSSINGS: ONE FULL LENGTH OF PIPE SHALL BE CENTERED ABOVE OR BELOW THE OTHER PIPE LINE SO THAT THE WATER MAIN JOINTS WILL BE AS FAR AS POSSIBLE FROM THE OTHER PIPE LINE.

EAST 1/2
TRACT 16
2.91 ACRES

(PHASE 2) 03-26-16-0070-01600-0010

POTABLE WATER &
SANITARY SEWER PLAN
SHEET 18 OF 28

MAGNOLIA OAKS
7240 MASSACHUSETTS AVE.
NEW PORT RICHEY, FL 34653

SUBMITTAL DATE:

| REV | DATE | DESCRIPTION |
|---|---|---|

SCALE: 1" = 30.00'

GALEN JAY HOFMANN , P. E.
8620 AIRWAY BLVD.
NEW PORT RICHEY, FL 34654
P: 727-844-7686
F: 727-844-7626

GALEN J. HOFMANN P.E.
CONSULTING CIVIL ENGINEER
5-4-18
GALEN J. HOFMANN , P.E. # 21795
NOT VALID UNLESS EMBOSSED WITH A RAISED SEAL

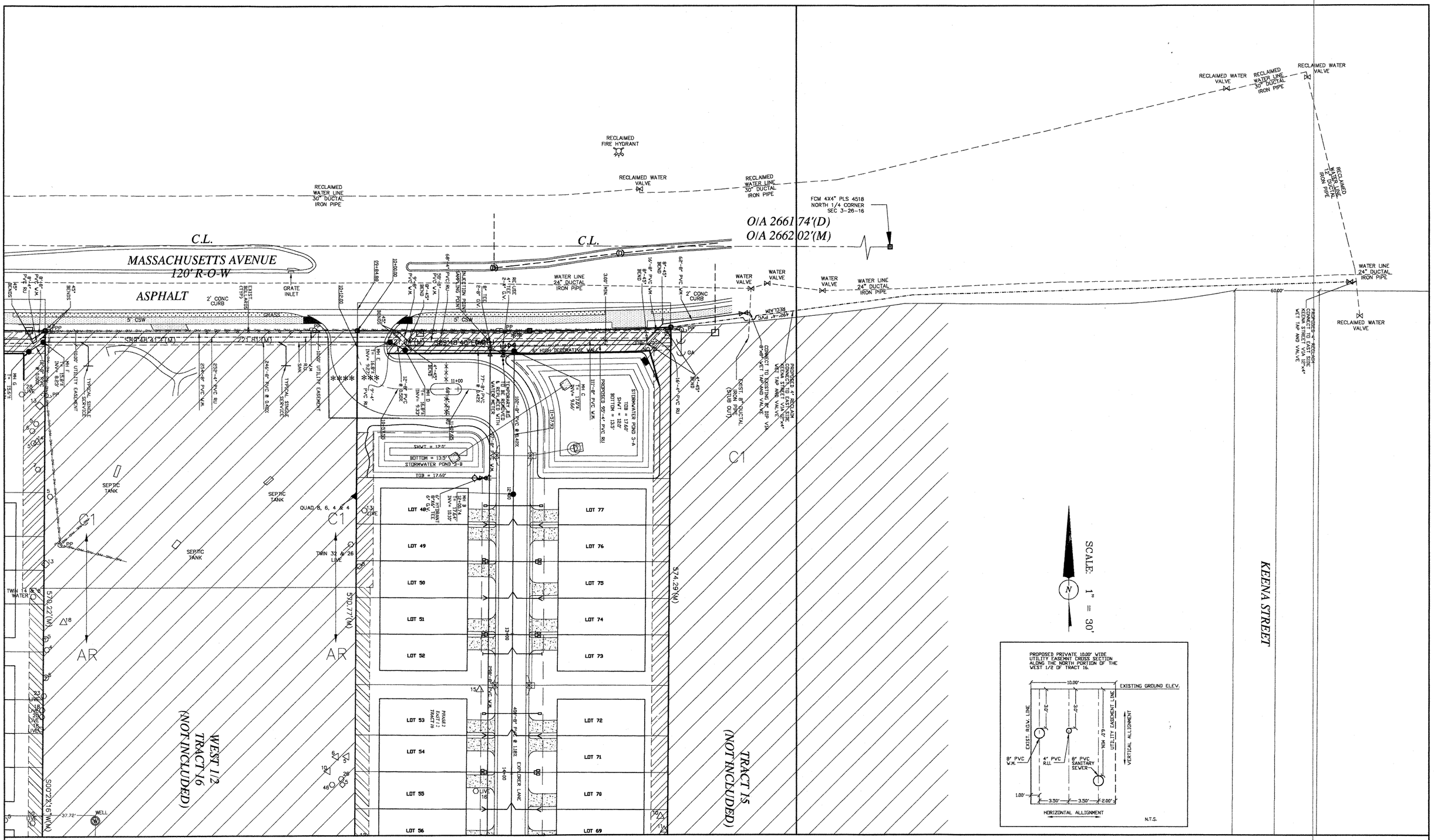


CONSTRUCTION PLAN SUBMITTAL

| | |
|---|---|
| OFF-SITE UTILITIES (EAST TO KEENA ST)<br>SHEET 18-A OF 28 | MAGNOLIA OAKS<br>7240 MASSACHUSETTS AVE.<br>NEW PORT RICHEY, FL 34653 |
| | SUBMITTAL DATE: |
| REV DATE DESCRIPTION | SCALE: 1" = 50.00' |

GALEN JAY HOFMANN , P. E.
8620 AIRWAY BLVD.
NEW PORT RICHEY, FL 34654
P: 727-844-7686
F: 727-844-7626

GALEN J. HOFMANN P.E.
CONSULTING CIVIL ENGINEER
5-1-08
GALEN J. HOFMANN , P.E. # 21798
NOT VALID UNLESS EMBOSSED WITH A RAISED SEAL

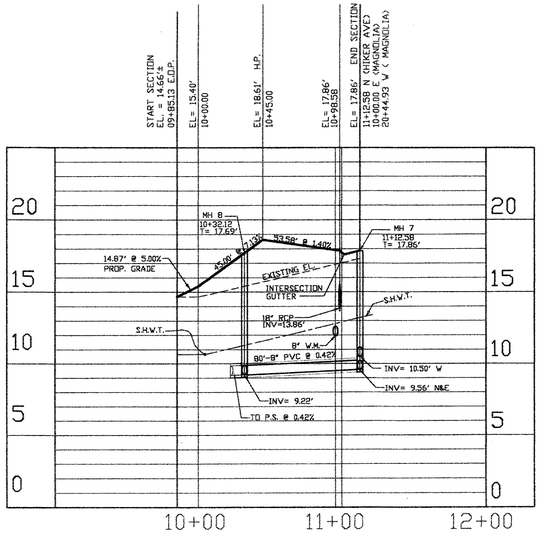


HIKER AVENUE
(PHASE 1)

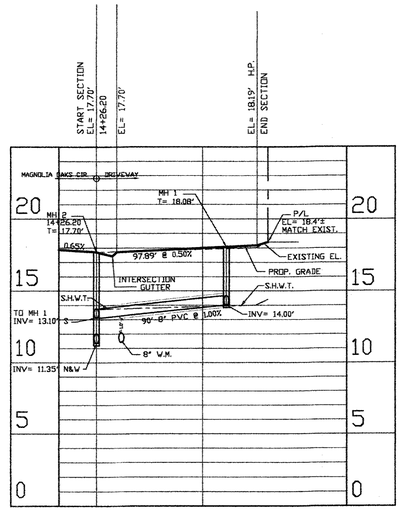


DRIVEWAY SERVING LOTS 21-23
(PHASE 1)

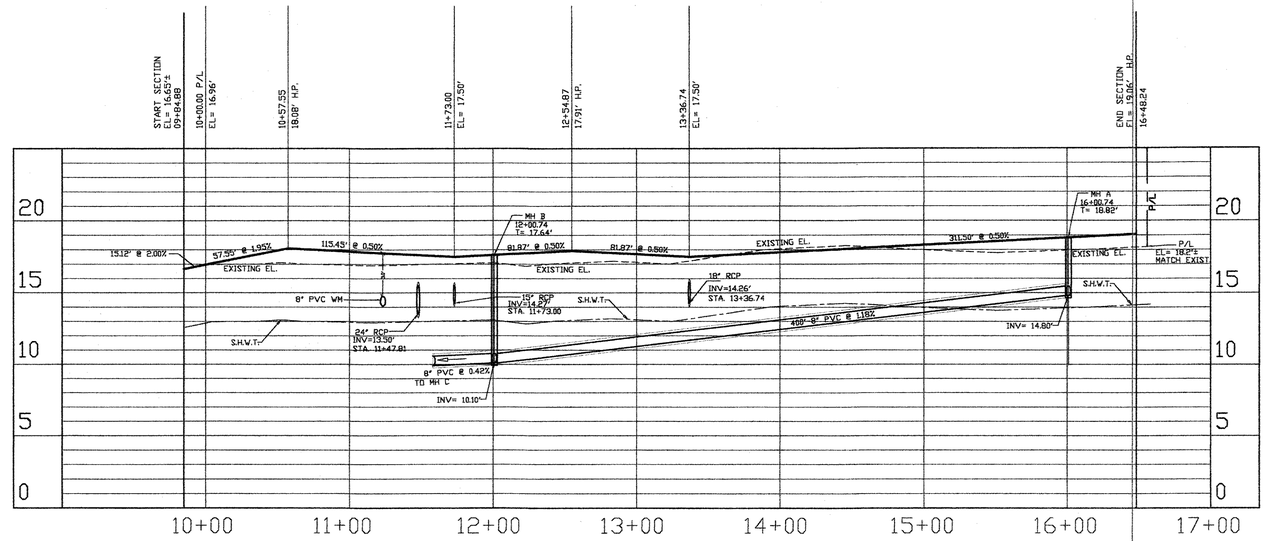


EXPLORER LANE
(PHASE 2)

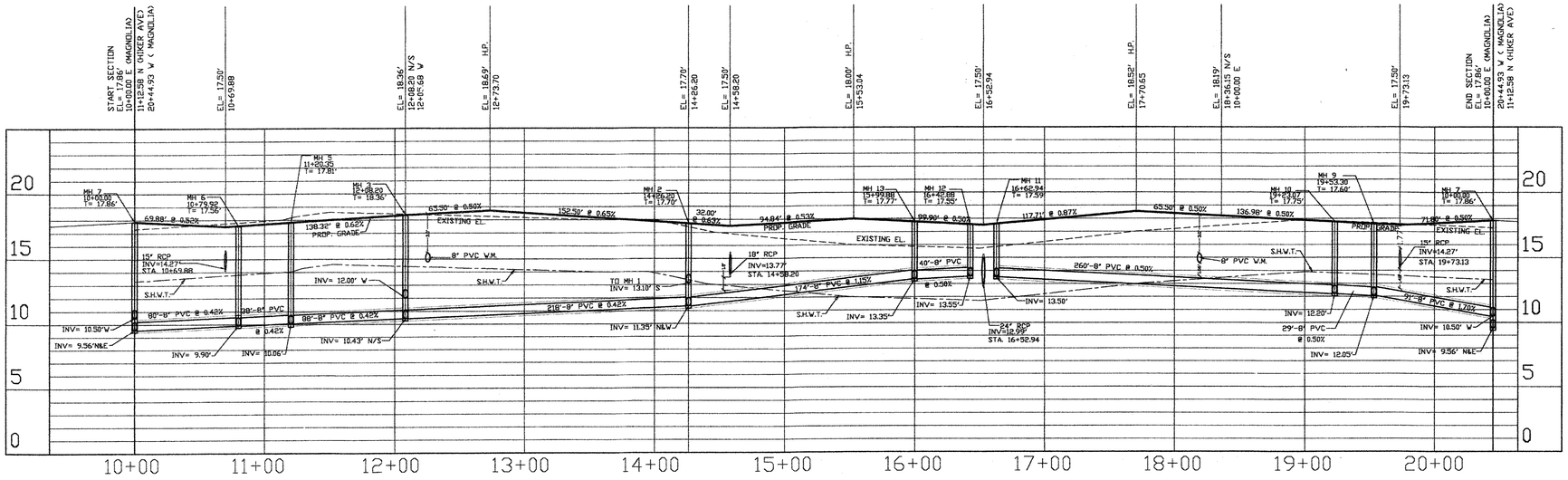


MAGNOLIA OAKS CIRCLE
(PHASE 1)

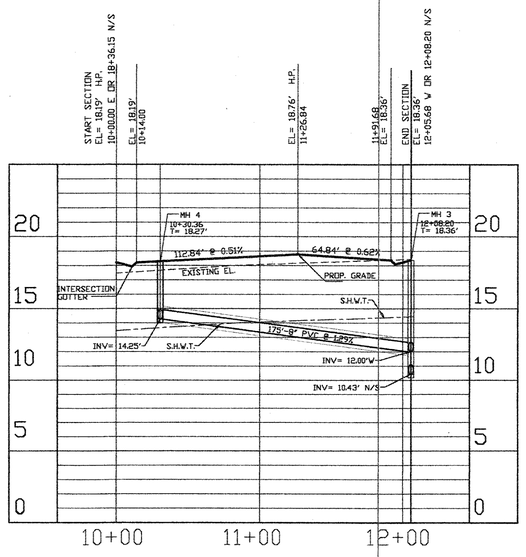


RECREATION AVENUE

HORIZONTAL SCALE: 1"=50'
VERTICAL SCALE: 1"=5'

UTILITY NOTES:

THERE IS TO BE A MINIMUM OF 12" VERTICAL SEPARATION BETWEEN ALL UTILITIES AT CROSSINGS.

THERE IS TO BE A MINIMUM 3.0' VERTICAL COVER ON PROPOSED WATER MAINS.

THERE IS TO BE A MINIMUM OF 4.0' BETWEEN ALL SANITARY INVERTS AND PROPOSED GRADES WITHIN THE ROADWAYS.

PRELIMINARY & CONSTRUCTION PLAN SIMULTANEOUS SUBMITTAL

| | |
|---|---|
| PROFILES<br>SHEET 19 OF 28 | MAGNOLIA OAKS<br>7240 MASSACHUSETTS AVE.<br>NEW PORT RICHEY, FL 34653 |
| REV / DATE / DESCRIPTION | SUBMITTAL DATE: |
| | SCALE: 1" = 50.00' |


GALEN JAY HOFMANN , P. E.
8620 AIRWAY BLVD.
NEW PORT RICHEY, FL 34654
P: 727-844-7686
F: 727-844-7625

GALEN J. HOFMANN P.E.
CONSULTING CIVIL ENGINEER
GALEN J. HOFMANN , P.E. # 21798
NOT VALID UNLESS EMBOSSED WITH A RAISED SEAL

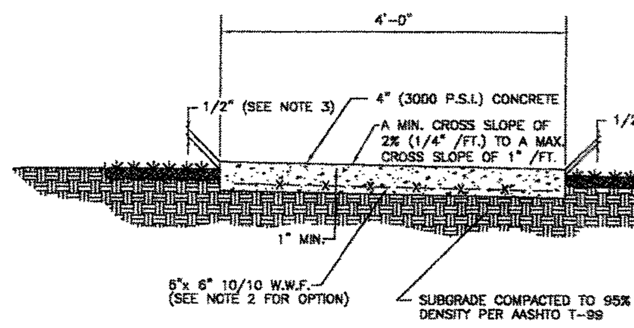


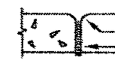


EXPANSION JOINT DETAIL
NOT TO SCALE

NOTES:
1. EXPANSION JOINT NEEDED EVERY 48' TROWELLED CONTROL JOINT NEEDED EVERY 6'.
2. IN LIEU OF WIRE WOVEN FABIC CONTRACTOR MAY USE CONCRETE REINFORCED WITH FIBERGLASS AS AN ACCEPTABLE ALTERNATE.
3. A SPECIAL ATTENTION SHALL BE GIVEN TO THE GRADED SOD PLACEMENT TRENCH. THE GRADING BY THE CONTRACTOR SHALL PROVIDE A 1/2" DROP FROM THE SIDEWALK TO THE TOP OF THE SOD.

CONSTRUCTION CONTROL JOINT SHALL BE USED AT THE END OF DAILY OPERATIONS AND BETWEEN 1 HOUR POUR TIMES.

CONSTRUCTION CONTROL JOINT DETAIL

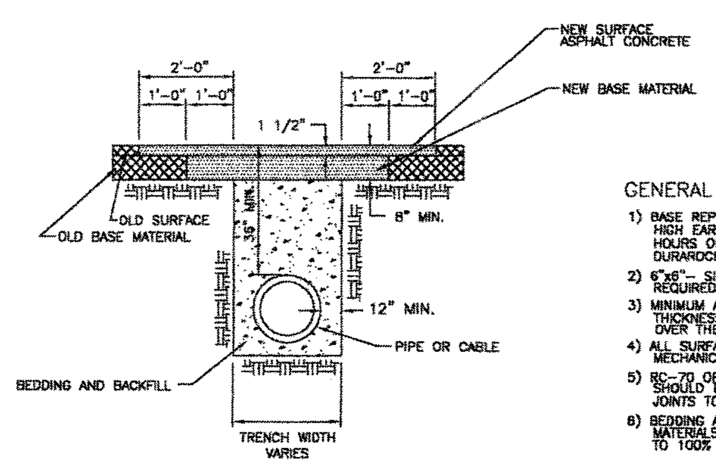


SPECIAL NOTE:
REFER TO ROADWAY AND TRAFFIC DESIGN STANDARDS, TRAFFIC CONTROL THROUGH WORK ZONES SECTION FOR PLACEMENT AND TYPE OF TRAFFIC CONTROL DEVICES THAT MUST BE UTILIZED DURING CONSTRUCTION.

GENERAL NOTES:
1) BASE REPLACEMENT SHALL BE 3,000 PSI HIGH EARLY STRENGTH CONCRETE AT 48 HOURS OR 13" MIN. THICKNESS OF DURAROCK COMPACTED TO 98% T-180
2) 6"x6"- SIX GAUGE WELDED WIRE FABRIC REQUIRED IN CONCRETE BASE
3) MINIMUM ASPHALTIC CONCRETE SURFACE THICKNESS IS 1 1/2" OF TYPE S-1 OVER THE CUT AREA IN ONE LAYER
4) ALL SURFACE JOINTS SHALL BE MECHANICALLY SAW CUT
5) RC-70 OR EQUIVALENT LIQUID ASPHALT SHOULD BE ADDED TO ALL SURFACE JOINTS TO FORM SEAL
6) BEDDING AND BACKFILL WITH SELECTED MATERIALS TO BE PLACED AND COMPACTED TO 100% T-180 IN 6" LIFTS

TYPICAL DRIVE OR ROADWAY CUT
ASPHALT CONCRETE SURFACE

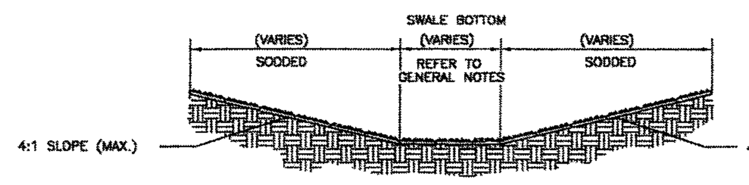


SECTION

SWALE DETAIL

GENERAL NOTES
1. REFER TO F.D.O.T. STANDARD SPECIFICATION SECT. 575 FOR SODDING SPECIFICATIONS.
2. REFER TO F.D.O.T. STANDARD SPECIFICATION SECT. 570 FOR SEEDING AND MULCHING.
3. LESS THAN 3% SWALE FLOW LINE GRADES SHALL BE SEEDED & MULCHED.
4. 3% TO 5% SWALE FLOW LINE GRADES REQUIRED STRIP SODDING ACROSS SWALES EVERY 20' MAX.
5. 5% TO 8% SWALE GRADES REQUIRE SWALES TO BE FULLY SODDED. SOD SHALL BE OVER LAPPED AT BOTTOM OF SWALES.
6. SWALE FLOWLINES GREATER THAN 8% SHALL HAVE SOD PEGGED INPLACE.

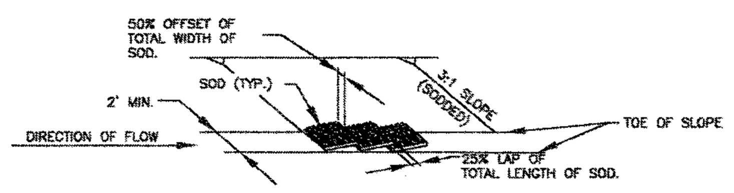


SOD LAPPING PLACEMENT

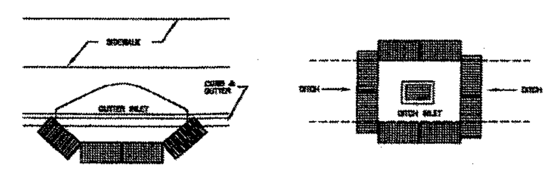


BARRIERS FOR INLETS

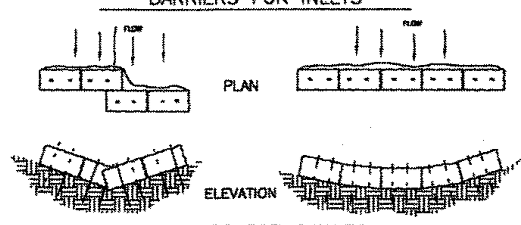


BARRIERS FOR SWALES

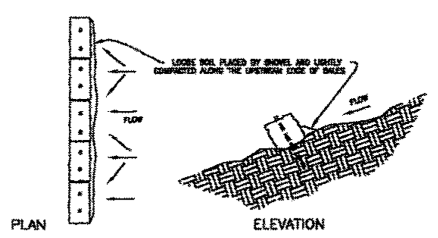


BARRIERS FOR SLOPES

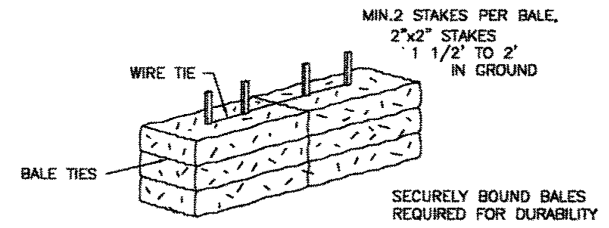


ANCHORING BALES

NOTES:
-For additional information and details, see F.D.O.T. Index No.102.
-Unless specified, silt fences may be used in lieu of hay barriers.
-Additional posts and rails may be necessary to secure and support barriers.
-Additonal barrier lengths may be required by the County Engineer or by regulatory agencies.

# HAY BALE BARRIER

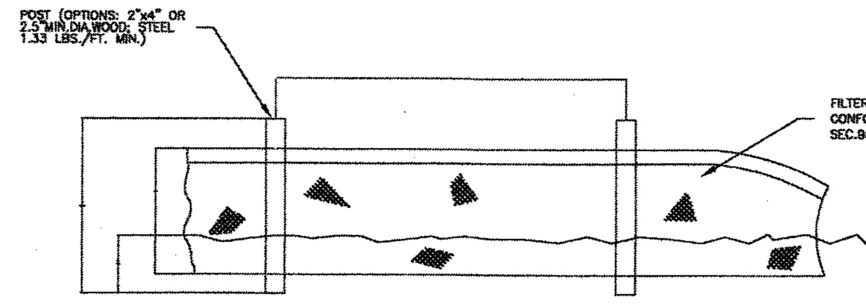


ELEVATION

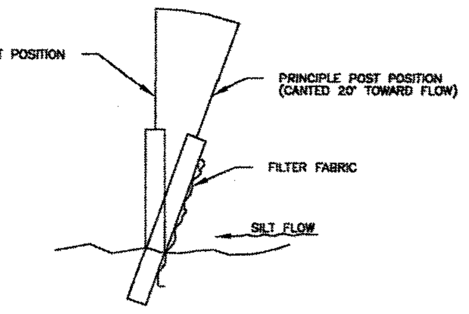


SECTION

## TYPE III SILT FENCE

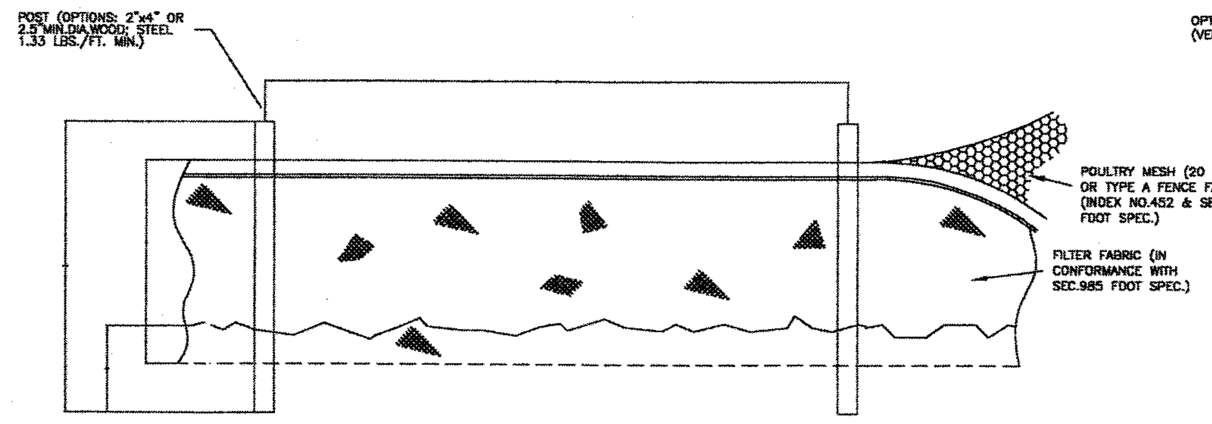


ELEVATION

## TYPE IV SILT FENCE

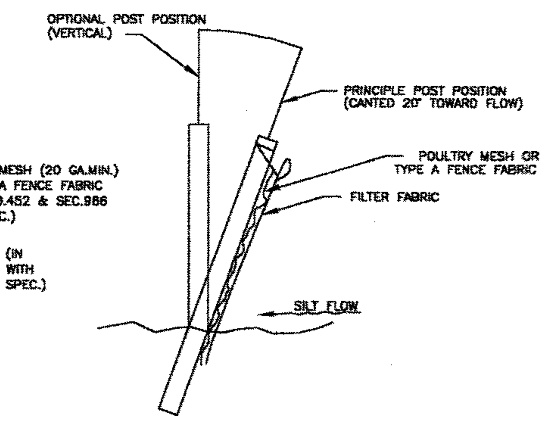


SECTION

## SILT FENCES

NOTES:
-For additional information and details, see F.D.O.T. Index No.102.
-Unless specified, hay barriers may be used in lieu of silt fences.
-Additional posts and rails may be necessary to secure and support barriers.
-Additonal fence lengths may be required by the County Engineer or by regulatory agencies.

DO NOT DEPLOY IN A MANNER THAT SILT FENCES WILL ACT AS A DAM ACROSS PERMANENT FLOWING WATERCOURSES. SILT FENCES ARE TO BE USED AT UPLAND LOCATIONS AND TURBIDITY BARRIERS USED AT PERMANANT BODIES OF WATER.

1. ALL ELEVATIONS REFER TO NATIONAL GEODETIC VERTICAL DATUM (1929).
2. ALL EDGE OF PAVEMENT RADII ARE 25'UNLESS OTHERWISE NOTED.
3. SLOPES OF 4:1 AND GREATER ARE TO BE SODDED. ALL OTHER DISTURBED AREAS ARE TO BE STABILIZED WITH SEED & MULCH.
4 EXISTING TOPOGRAPHY TAKEN FROM FIELD SURVEY.
5. THE LOCATION OF EXISTING UTILITIES IS APPROXIMATE AND IT IS THE RESPONSIBILITY OF THE CONTRACTOR TO VERIFY THEIR EXACT LOCATION PRIOR TO CONSTRUCTION IN THEIR VICINITY.
6. CONNECTION INTO EXISTIG COUNTY-OWNED SYSTEMS SHALL BE VIA WET-TAP WET-TAPS SHALL BE PERFORMED BY THE PCUSB AT THE OWNER'S EXPENSE. MATERIALS FOR TAPS LARGER THAN 2" SHALL BE PROVIDED AND INSTALLED BY THE CONTRACTOR.
7. EROSION CONTROL OR SEDIMENTATION BARRIER: THE CONTRACTOR IS TO PROVIDE EROSION CONTROL OR SEDIMENTATION BARRIER (HAY BALES OR SILT SCREEN) TO PREVENT SILTATION OF ADJACENT PROPERTY, STREETS, DETENTION PONDS, STORM SEWERS AND WATERWAYS PRIOR TO COMMENCEMENT OF CONSTRUCTION OR DEMOLITION. THE EROSION CONTROL OR SEDIMENTATION BARRIER SHALL BE MAINTAINED AND INSPECTED WEELY IN AN EFFECTIVE WORKING MANNER FOR THE DURATION OF CONSTRUCTION. ADDITIONALLY, CONTRACTOR SHALL PLACE STRAW, MULCH OR OTHER SUITABLE MATERIAL ON GROUND IN AREAS WHERE CONSTRUCTION RELATED TRAFFIC IS TO ENTER & EXIT SITE. IF, IN THE OPINION OF THE ENGINEER AND/OR THE LOCAL AUTHORITIES, EXCESSIVE QUANTITIES OF SOIL ARE TRANSPORTED OFF-SITE EITHER BY NATURAL DRAINAGE OR BY VEHICULAR TRAFFIC, THE CONTRACTOR IS TO REMOVE SAID SOIL AND REPAIR DAMAGED OR INEFFECTIVE EROSION CONTROL OR SEDIMENTATION BARRIER TO THE SATISFACTION OF THE ENGINEER AND/OR THE LOCAL AUTHORITIES. SILTATION ACCUMULATIONS GREATER THAN THE LESSER OF 12 INCHES OR ONE-HALF THE DEPTH OF THE SEDIMENTATION BARRIER SHALL BE IMMEDIATELY REMOVED AND REPLACED IN UPLAND AREAS.

LOT GRADING TYPE "A"
ALL DRAINAGE TO STREET

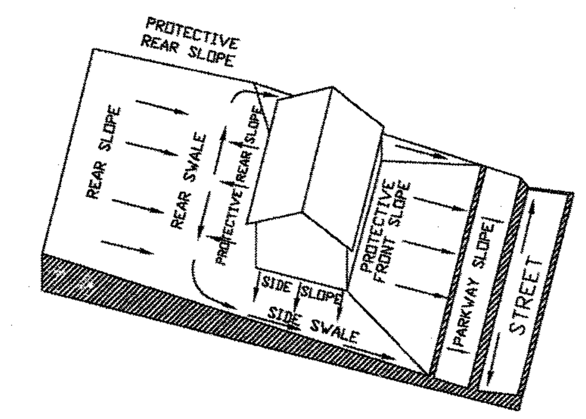


LOT GRADING TYPE "B"
DRAINAGE TO BOTH STREET
AND REAR LOT LINE

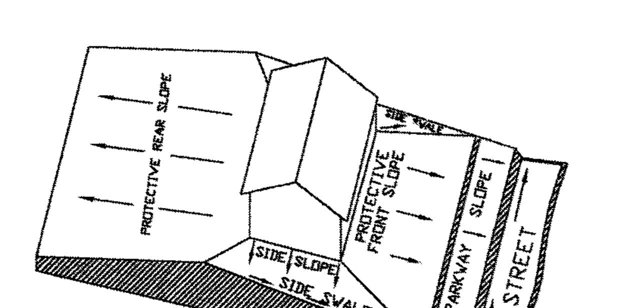


WHERE SIDE YARD SWALES AND OTHER SWALES ARE REQUIRED, SIDE SLOPES SHALL BE NOT GREATER THAN 5:1

MINIMUM DEPTH OF SWALES WILL BE 6 INCHES.

LOT GRADING TYPE "C"
ALL DRAINAGE TO REAR
LOT LINE

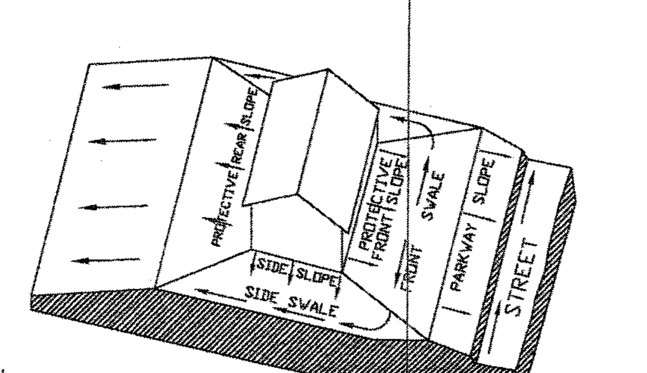


WHERE SIDE YARD SWALES AND OTHER SWALES ARE REQUIRED, SIDE SLOPES SHALL BE NOT GREATER THAN 5:1

MINIMUM DEPTH OF SWALES WILL BE 6 INCHES.

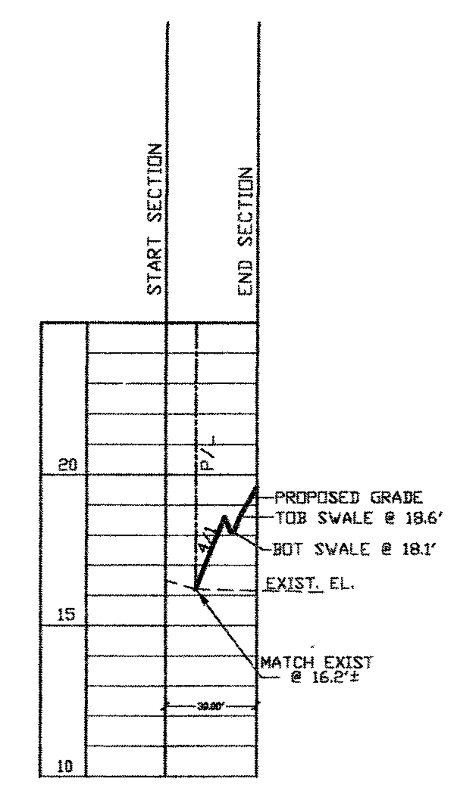


CROSS SECTION A-A
(PHASE 1)

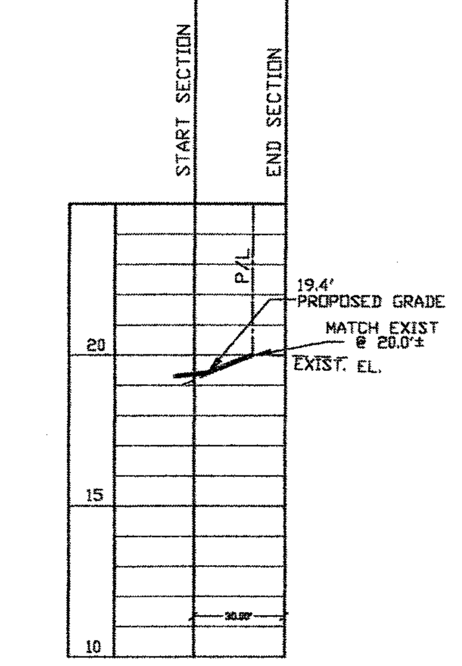


CROSS SECTION B-B
(PHASE 1)

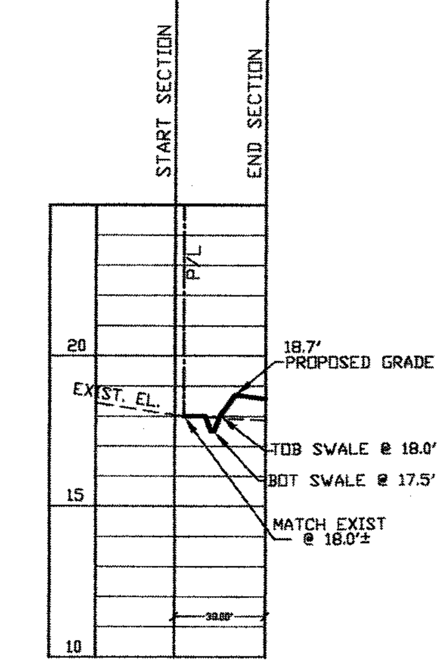


CROSS SECTION C-C
(PHASE 2)

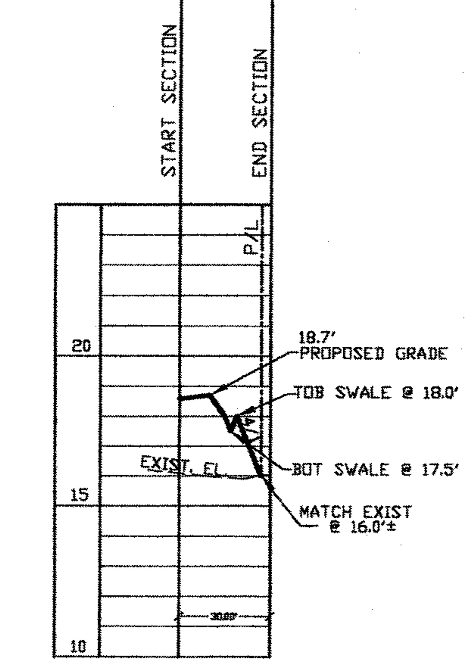


CROSS SECTION D-D
(PHASE 2)

HORIZONTAL SCALE: 1"=50'
VERTICAL SCALE: 1"=5'

DESIGN SPEED: 30 MPH
POSTED SPEED: 25 MPH

TYPE 4 ROADWAY TYPICAL SECTION

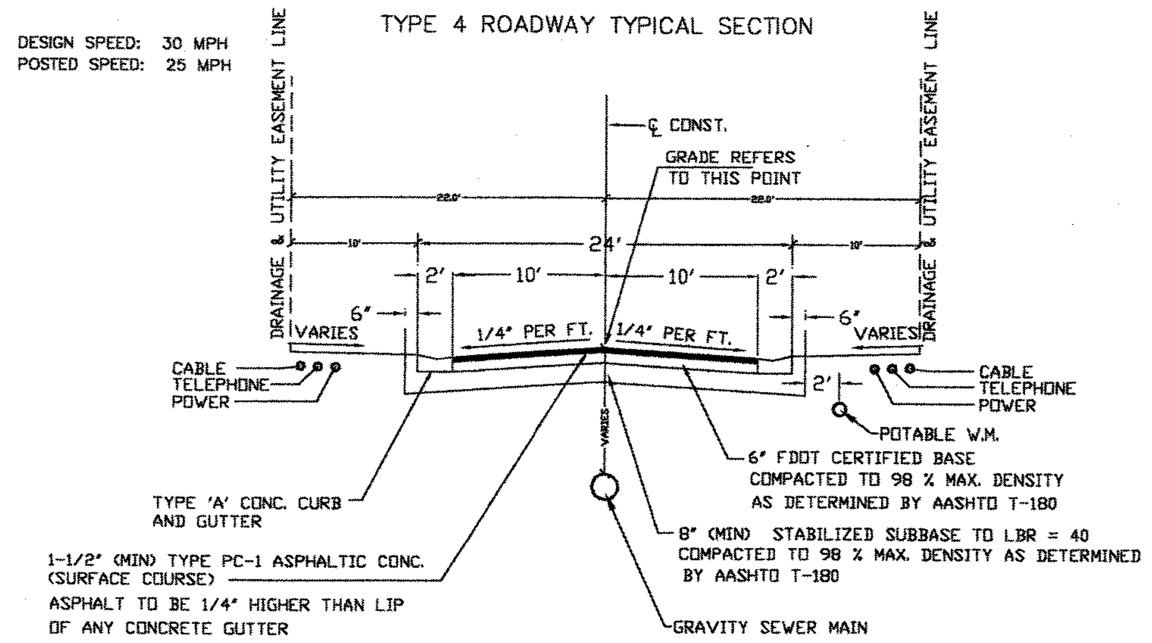


NOTES:
ALL THICKNESSES ARE MINIMUM
BASE COMPACTION TO MEET 98% UNDER AASHTO T-180
* BASE MATERIAL TO BE COMPOSED OF LIMEROCK AND OR CRUSHED ROCK
SUBBASE COMPACTED TO 98 % DENSITY UNDER AASHTO T-180 MEASURED AT SURFACE
SUBBASE TO BE NOT LESS THAN 9" OF GOOD CLEAN ACCEPTABLE MATERIAL COMPACTED TO NOT LESS THAN LBR - 40

OR

REINFORCED CONCRETE

TYPE 4 ROADWAY TYPICAL SECTION
NTS

SN=(.08 X 8) + (.18 X 6) + ( .44 X 1.5) = 2.38

PROPOSED INTERIOR SUBDIVISION STREET CLASSIFICATION: TYPE 4 LOCAL PROPOSED FOR ALL ROADWAYS.

| PAVING AND GRADING DETAILS<br>SHEET 20 OF 28 | MAGNOLIA OAKS<br>7240 MASSACHUSETTS AVE.<br>NEW PORT RICHEY, FL 34653 |
|---|---|
| REV \| DATE \| DESCRIPTION | SUBMITTAL DATE:<br>SCALE: 1" = 50.00' |
| GALEN JAY HOFMANN , P. E.<br>8620 AIRWAY BLVD.<br>NEW PORT RICHEY, FL 34654<br>P: 727-844-7686<br>F: 727-844-7626 | GALEN J. HOFMANN P.E.<br>CONSULTING CIVIL ENIGINEER<br>5-1-08<br>GALEN J. HOFMANN , P.E. # 21796<br>NOT VALID UNLESS EMBOSSED WITH A RAISED SEAL |

## DIMENSIONS AND QUANTITIES

| Slope | D | X | A | B | C | E | F | G | H ■ | M Single Pipe | M Double Pipe | M Triple Pipe | M Quad. Pipe | N | 5½" Concrete Slab (CY) ◪ Single Pipe | Double Pipe | Triple Pipe | Quad. Pipe | Sodding (SQ. YDS.) Single Pipe | Double Pipe | Triple Pipe | Quad. Pipe |
|---|---|---|---|---|---|---|---|---|---|---|---|---|---|---|---|---|---|---|---|---|---|---|
| 1:2 Slope | 15" | 2'-7" | 1.92' | 2.18' | 4.10' | 2.06' | 5' | 1.22' | 2.9' | 4.63' | 7.21' | 9.79' | 12.37' | 1.19' | 0.38 | 0.58 | 0.77 | 0.96 | 21 | 24 | 27 | 30 |
| | 18" | 2'-10" | 1.97' | 2.74' | 4.71' | 2.56' | 6' | 1.41' | 3.4' | 4.92' | 7.75' | 10.58' | 13.42' | 1.21' | 0.44 | 0.65 | 0.87 | 1.09 | 22 | 25 | 28 | 31 |
| | 24" | 3'-5" | 2.06' | 3.85' | 5.91' | 3.56' | 7' | 1.73' | 3.4' | 5.50' | 8.92' | 12.33' | 15.75' | 1.25' | 0.54 | 0.83 | 1.12 | 1.42 | 24 | 28 | 32 | 35 |
| | 30" | 4'-3" | 2.15' | 4.95' | 7.10' | 4.56' | 8' | 2.00' | 3.4' | 6.08' | 10.33' | 14.58' | 18.83' | 1.29' | 0.68 | 1.09 | 1.50 | 1.91 | 26 | 31 | 35 | 40 |
| | 36" | 5'-1" | 2.25' | 6.08' | 8.33' | 5.56' | 9' | 2.24' | 3.4' | 6.67' | 11.75' | 16.83' | 21.92' | 1.33' | 0.81 | 1.38 | 1.95 | 2.51 | 28 | 34 | 39 | 45 |
| | 42" | 6'-0" | 2.34' | 7.21' | 9.55' | 6.56' | 10' | 2.45' | 3.4' | 7.25' | 13.25' | 19.25' | 25.25' | 1.38' | 0.97 | 1.70 | 2.45 | 3.19 | 30 | 37 | 43 | 50 |
| | 48" | 6'-9" | 2.43' | 8.33' | 10.76' | 7.56' | 11' | 2.65' | 3.4' | 7.83' | 14.58' | 21.33' | 28.08' | 1.42' | 1.13 | 2.04 | 2.93 | 3.84 | 32 | 39 | 47 | 54 |
| | 54" | 7'-8" | 2.52' | 9.44' | 11.96' | 8.56' | 12' | 2.83' | 3.4' | 8.42' | 16.08' | 23.75' | 31.42' | 1.46' | 1.31 | 2.44 | 3.58 | 4.72 | 34 | 42 | 51 | 59 |
| | 60" | 8'-6" | 2.62' | 10.56' | 13.18' | 9.56' | 14' | 3.00' | 4.4' | 9.00' | 17.50' | 26.00' | 34.50' | 1.50' | 1.51 | 2.89 | 4.28 | 5.68 | 36 | 45 | 55 | 64 |
| | 66" | 9'-2" | 2.71' | 11.68' | 14.39' | 10.56' | 15' | 3.18' | 4.4' | 9.58' | 18.75' | 27.92' | 37.08' | 1.54' | 1.68 | 3.25 | 4.84 | 6.43 | 38 | 48 | 58 | 68 |
| | 72" | 10'-0" | 2.80' | 12.80' | 15.60' | 11.56' | 16' | 3.30' | 4.4' | 10.16' | 20.16' | 30.16' | 40.16' | 1.58' | 1.89 | 3.74 | 5.59 | 7.45 | 40 | 51 | 62 | 73 |
| 1:4 Slope | 15" | 2'-7" | 2.27' | 4.09' | 6.36' | 4.03' | 8' | 1.22' | 4.0' | 4.63' | 7.21' | 9.79' | 12.37' | 1.19' | 0.57 | 0.87 | 1.15 | 1.44 | 23 | 26 | 29 | 32 |
| | 18" | 2'-10" | 2.36' | 5.12' | 7.48' | 5.03' | 9' | 1.41' | 4.0' | 4.92' | 7.75' | 10.58' | 13.42' | 1.21' | 0.66 | 0.99 | 1.31 | 1.65 | 25 | 28 | 31 | 35 |
| | 24" | 3'-5" | 2.53' | 7.18' △ | 9.71' | 7.03' △ | 11' | 1.73' | 4.0' | 5.50' | 8.92' | 12.33' | 15.75' | 1.25' | 0.85 | 1.30 | 1.75 | 2.20 | 28 | 32 | 36 | 40 |
| | 30" | 4'-3" | 2.70' | 9.25' | 11.95' | 9.03' | 13' | 2.00' | 4.0' | 6.08' | 10.33' | 14.58' | 18.83' | 1.29' | 1.10 | 1.74 | 2.39 | 3.05 | 31 | 36 | 41 | 46 |
| | 36" | 5'-1" | 2.87' | 11.31' ◇ | 14.18' | 11.03' ◇ | 15' | 2.24' | 4.0' | 6.67' | 11.75' | 16.83' | 21.92' | 1.33' | 1.32 | 2.21 | 3.08 | 3.96 | 34 | 40 | 46 | 52 |
| | 42" | 6'-0" | 3.05' | 13.37' | 16.42' | 13.03' | 17' | 2.45' | 4.0' | 7.25' | 13.25' | 19.25' | 25.25' | 1.38' | 1.58 | 2.76 | 3.91 | 5.09 | 38 | 44 | 51 | 58 |
| | 48" | 6'-9" | 3.22' | 15.43' | 18.65' | 15.03' | 19' | 2.55' | 4.0' | 7.83' | 14.58' | 21.33' | 28.08' | 1.42' | 1.85 | 3.30 | 4.73 | 6.17 | 41 | 48 | 56 | 63 |
| | 54" | 7'-8" | 3.39' | 17.49' | 20.88' | 17.03' | 21' | 2.83' | 4.0' | 8.42' | 16.08' | 23.75' | 31.42' | 1.46' | 2.14 | 3.95 | 5.77 | 7.58 | 44 | 52 | 61 | 69 |
| | 60" | 8'-6" | 3.56' | 19.55' | 23.11' | 19.03' | 23' | 3.00' | 4.0' | 9.00' | 17.50' | 26.00' | 34.50' | 1.50' | 2.45 | 4.66 | 6.87 | 9.07 | 47 | 56 | 66 | 75 |
| | 66" | 9'-2" | 3.73' | 21.62' | 25.35' | 21.03' | 25' | 3.18' | 4.0' | 9.58' | 18.75' | 27.92' | 37.08' | 1.54' | 2.88 | 5.54 | 8.18 | 10.84 | 49 | 59 | 69 | 80 |
| | 72" | 10'-0" | 3.91' | 23.68' | 27.59' | 23.03' | 27' | 3.30' | 4.0' | 10.16' | 20.16' | 30.16' | 40.16' | 1.58' | 3.54 | 6.61 | 9.87 | 13.13 | 52 | 63 | 74 | 85 |

◪ See General Note No. 3.
See Sheet 5 Of 6 For 3" Slab Quantities

■ Values shown for estimating pipe quantities and are for information only.

| | B | E | |
|---|---|---|---|
| | △ 6.42' | △ 6.25' | Dimensions permitted to allow use of 8' standard pipe lengths. |
| | ◇ 10.40' | ◇ 10.10' | Dimensions permitted to allow use of 12' standard pipe lengths. |

△◇ Concrete slab shall be deepened to form bridge across crown of pipe. See section below.

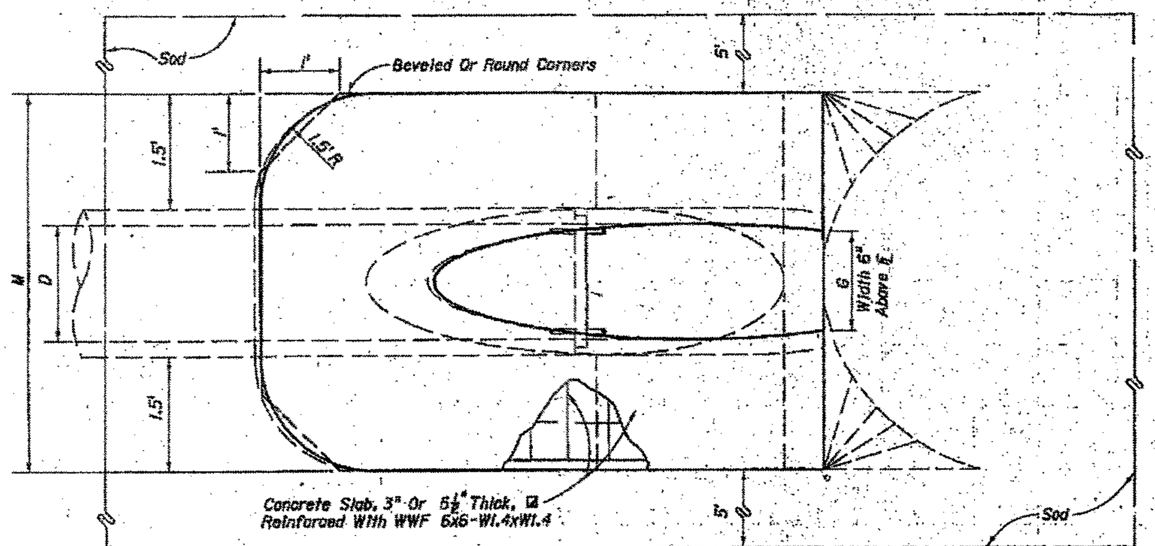


TOP VIEW-SINGLE PIPE

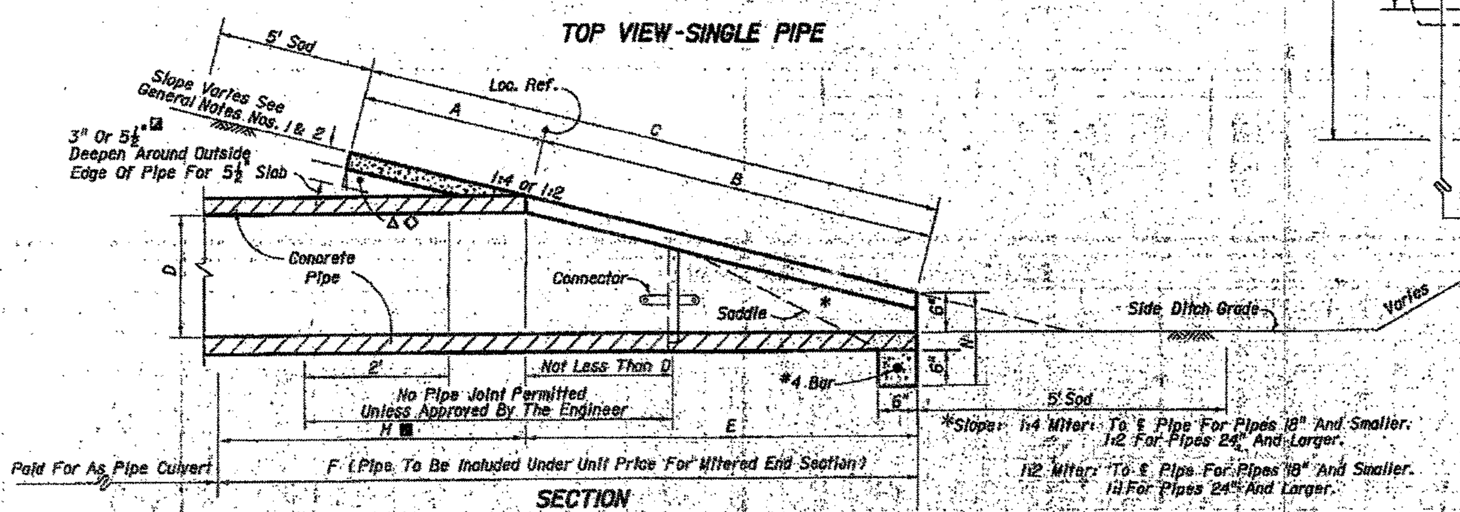


SECTION

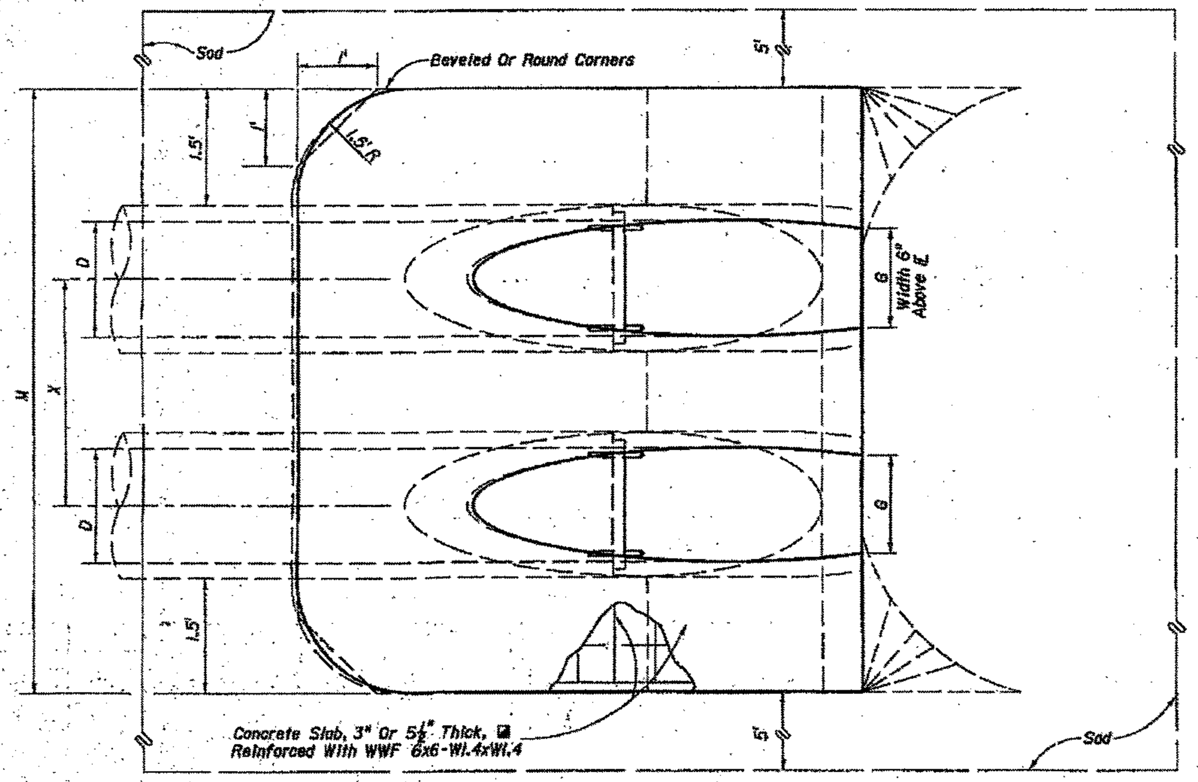


TOP VIEW-MULTIPLE PIPE

NOTE: See sheet 6 for details and notes.

| STATE OF FLORIDA DEPARTMENT OF TRANSPORTATION | | | |
|---|---|---|---|
| CROSS DRAIN MITERED END SECTION — SINGLE AND MULTIPLE ROUND CONCRETE PIPE | | | |
| | Names | Dates | Approved By State Drainage Engineer |
| Designed By | DCB | 06/78 | |
| Drawn By | | | |
| Checked By | KKM | 06/78 | Revision 02 · Sheet No. 1 of 6 · Index No. 272 |

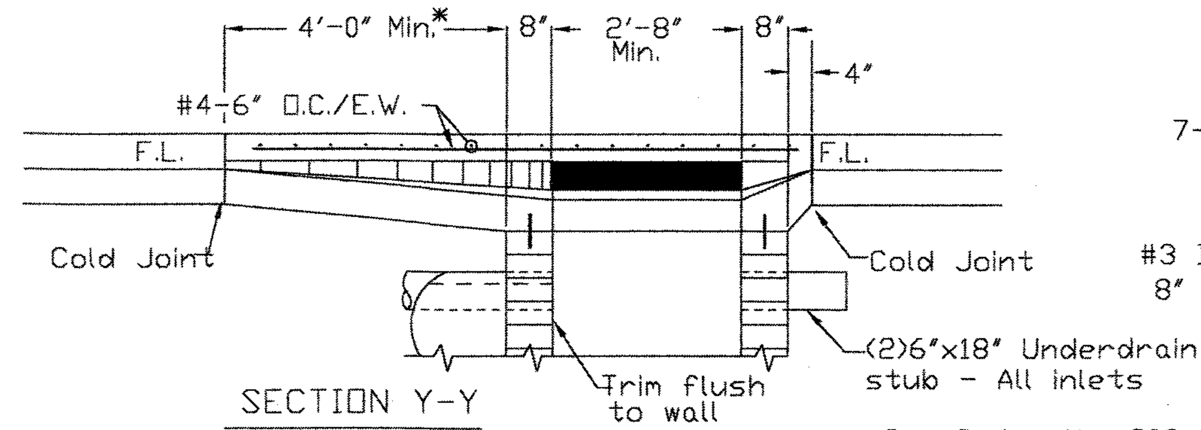


SECTION Y-Y

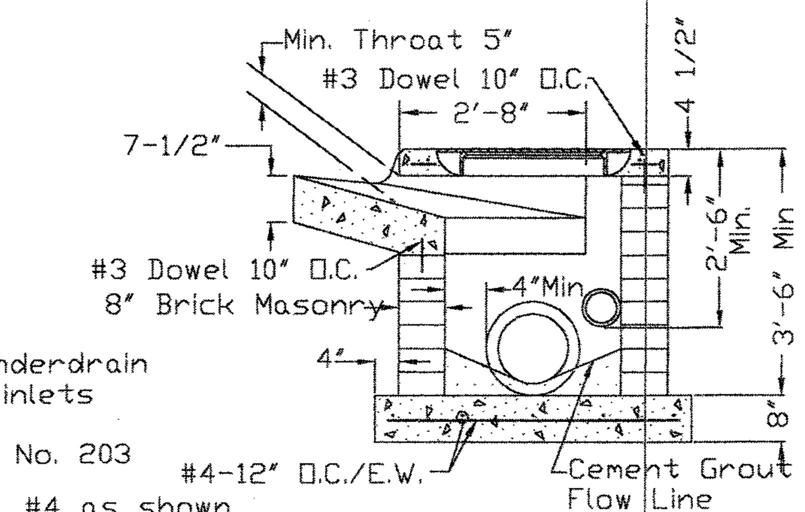


SECTION X-X

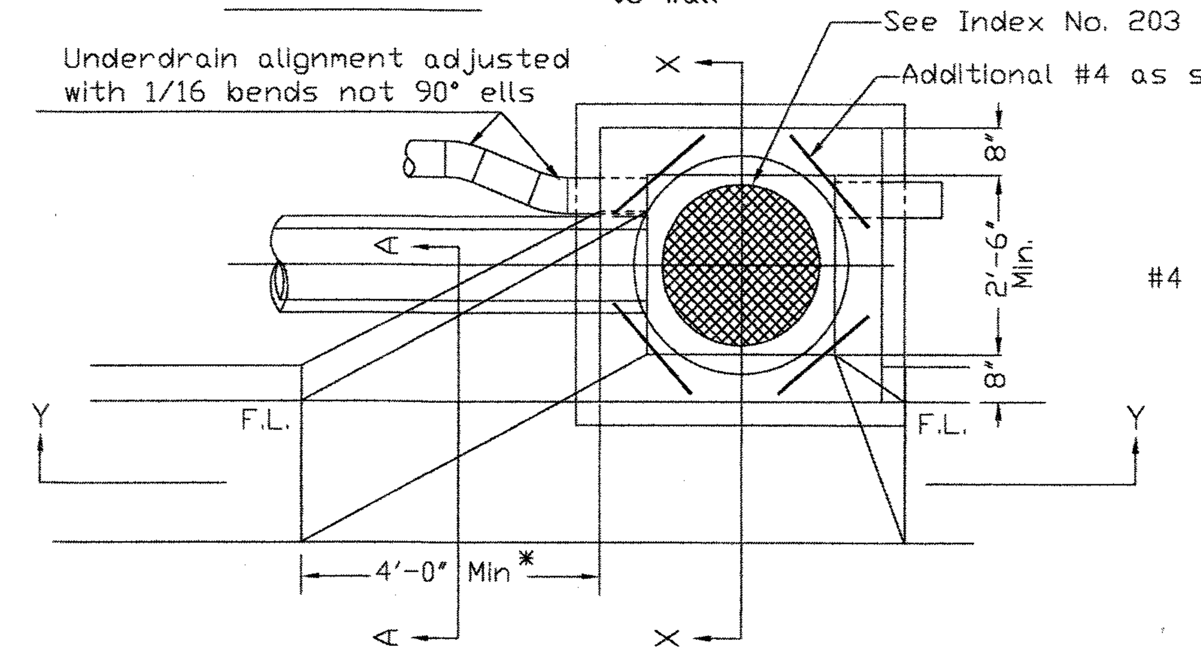


R.H. - L.H. OR DOUBLE WING INLET

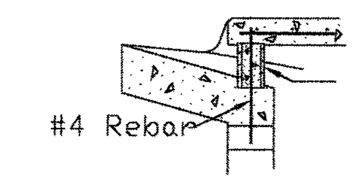


Concrete filled 4" p.v.c. support post to be used at center of inlet throats on double wing inlets.

DETAIL A

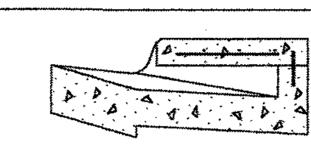

SECTION A-A

NOTES
1. When pipe diameter exceeds 30", inlets shall not be used as junction boxes, limit three pipes per inlet.
2. Chamfer all exposed edges.
3. All concrete 3,000 p.s.i.
4. Center support shall be used on double wing inlets. See Detail A.
*5. For grades exceeding 2%, a 6'-0" min. wing is permitted on the inlet.

TYPE A WING INLET FOR
TYPE I CURB

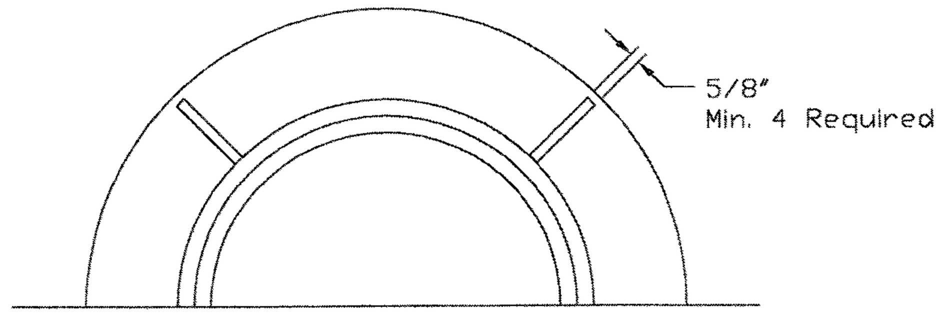


RING - HALF PLAN

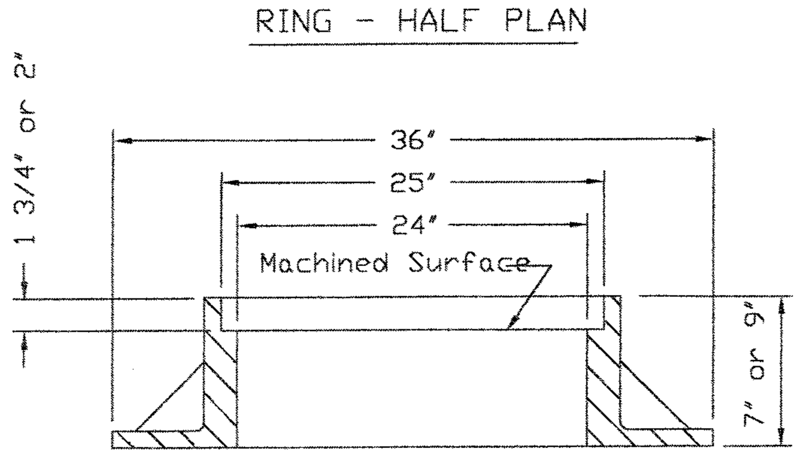


RING - SECTION
Minimum Weight 7" 232 lbs.
9" 278 lbs.

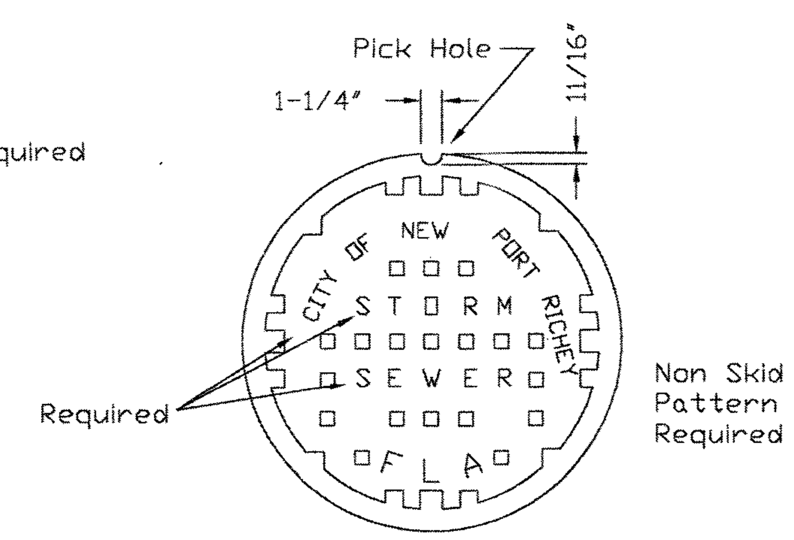


SOLID COVER

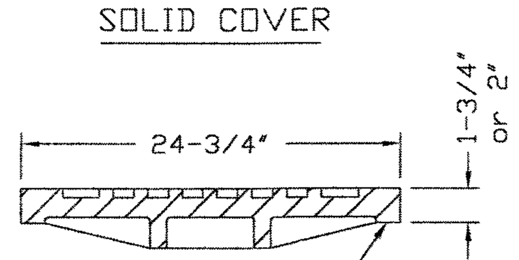


SOLID COVER SECTION
Minimum Weight 128 lbs.

NOTES
1. Where roadway base is 8" or thicker use 9" ring, all other cases 7" ring is permissible.
2. Manufacturers model of storm ring and cover to be USF 153, 4" high - or - USF 225, 7" high.
3. Perforated covers, when required shall be similar to solid covers.

STORM SEWER
MANHOLE COVER

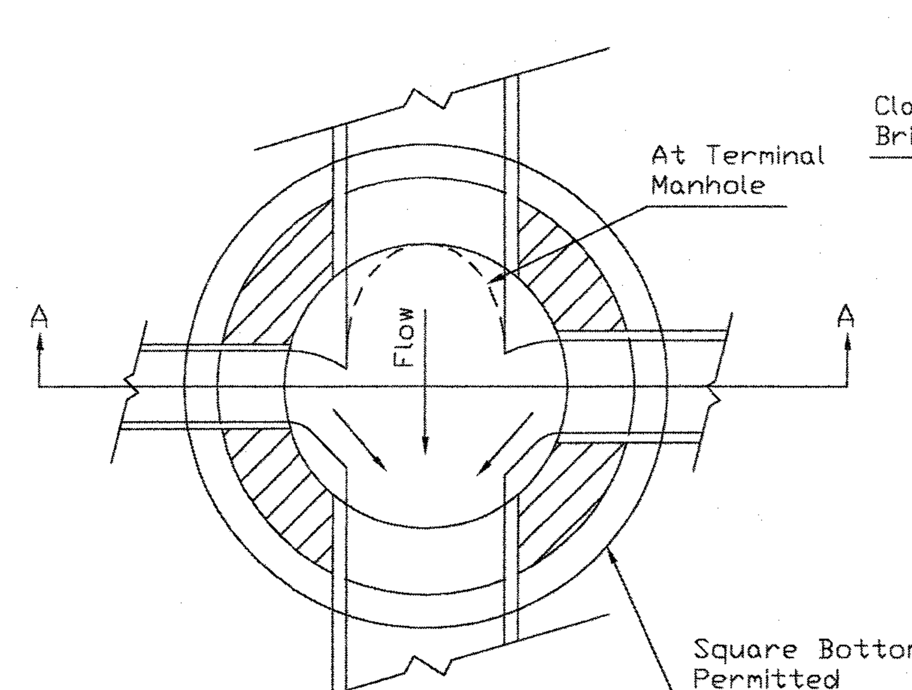


PLAN

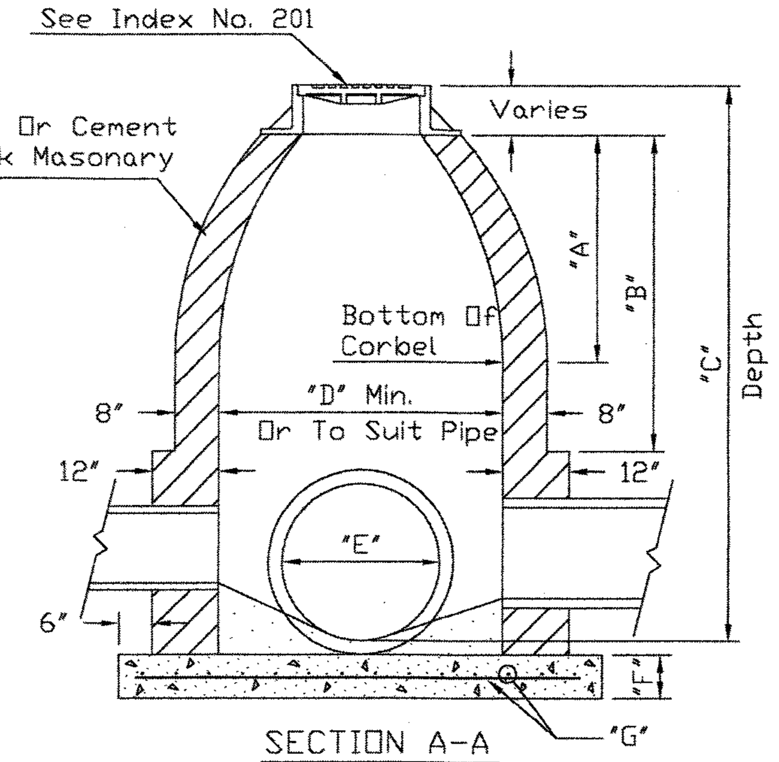


SECTION A-A

| | A | B | C | D | E | F | G |
|---|---|---|---|---|---|---|---|
| Shallow 0'- 4' | 2'-6" | | 4' Max | 3'-6" | 24" Max | 8" | #3 at 12" E.W. |
| Standard 4.1'- 6' | 3'-6" | | 6' Max | 4' | 30" Max | 8" | #5 at 10" E.W. |
| Deep 6.1'- 10' | 3'-6" | 7' | 10' | 4' | 48" Max | 12" | #5 at 10" E.W. |
| Deep 10.1'- 14' | 3'-6" | 7' | 14' | 5' | 48" Max | 12" | #5 at 10" E.W. |

NOTES
1. All concrete to be 3000 p.s.i.

STORM SEWER
MANHOLE DETAIL

NOTE: ALL PRE-CAST MANHOLES TO COMPLY WITH ASTM C478.
ALL MANHOLES TO HAVE A MINIMUM OF 4' INSIDE DIAMETER.

| STORMWATER DETAILS — SHEET 21 OF 28 | | | MAGNOLIA OAKS, 7240 MASSACHUSETTS AVE., NEW PORT RICHEY, FL 34653 |
|---|---|---|---|
| | | | SUBMITTAL DATE: |
| 00 | XX | INITIAL SUBMITTAL | |
| REV | DATE | DESCRIPTION | SCALE: 1" = 50.00' |


GALEN JAY HOFMANN, P. E.
8620 AIRWAY BLVD.
NEW PORT RICHEY, FL 34654
P: 727-844-7686
F: 727-844-7626

GALEN J. HOFMANN P.E.
CONSULTING CIVIL ENIGINEER
5-1-08
GALEN J. HOFMANN, P.E. # 21796
NOT VALID UNLESS EMBOSSED WITH A RAISED SEAL

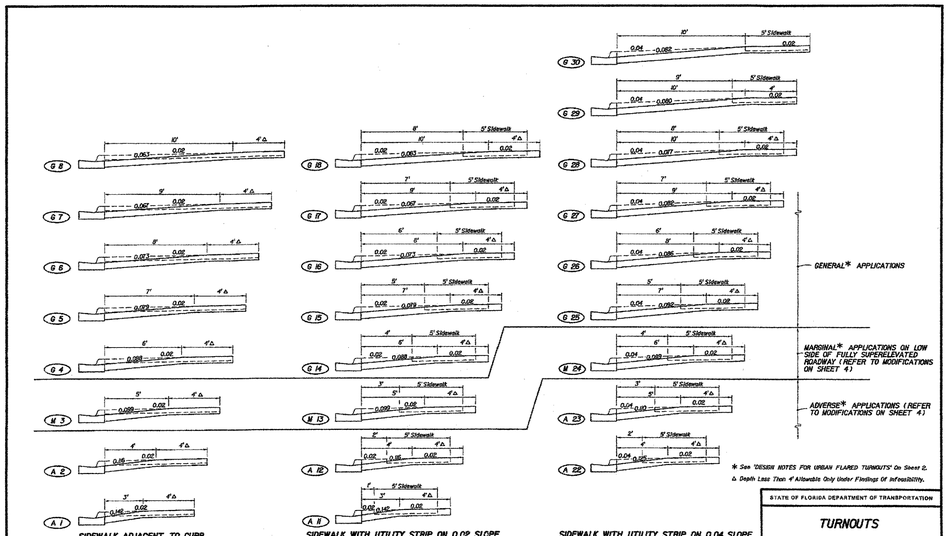


* See 'DESIGN NOTES FOR URBAN FLARED TURNOUTS' On Sheet 2.
Δ Depth Less Than 4" Allowable Only Under Findings Of Infeasibility.

## DRIVEWAY SECTIONS ON CURBED FACILITIES WITH SIDEWALKS

STATE OF FLORIDA DEPARTMENT OF TRANSPORTATION

**TURNOUTS**

| | Names | Dates | Approved By |
|---|---|---|---|
| Designed By | JRV/MB | 3/10 | Roadway Design Engineer |
| Drawn By | DR | 3/10 | Revision / Sheet No. / Index No. |
| Checked By | JRV/GJ | 3/10 | 00 / 3 of 6 / 515 |

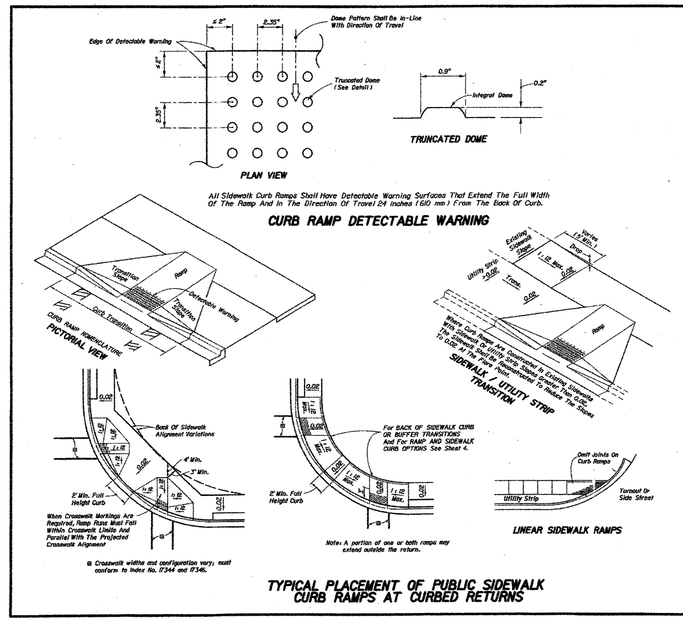


Ⓖ Crosswalk widths and configuration vary; must conform to Index No. 17344 and 17346.

## TYPICAL PLACEMENT OF PUBLIC SIDEWALK CURB RAMPS AT CURBED RETURNS

### GENERAL NOTES

1. Public sidewalk curb ramps shall be constructed in the public right of way at locations that will provide continuous unobstructed pedestrian circulation paths to pedestrian areas, elements and facilities in the public right of way and to accessible pedestrian routes on adjacent sites. Curbed facilities with sidewalks and those without sidewalks are to have curb ramps constructed at all street intersections and at turnouts that have curbed returns. Partial curb returns shall extend to the limit prescribed by Index No. 515 to accommodate curb ramps. Ramps constructed at locations without sidewalks shall have a landing constructed at the top of each ramp, see Sheet 5.
2. The location and orientation of curb ramps shall be as shown in the plans.
3. Curb ramp running slopes of unrestrained sites shall not be steeper than 1 : 12 and cross slope shall be 0.02 or flatter. Transition slopes shall not be steeper than 1 : 12.

   When altering existing pedestrian facilities where existing site development precludes the accommodation of a ramp slope of 1 : 12, a running slope between 1 : 12 and 1 : 10 is permitted for a rise of 6" maximum and a running slope of between 1 : 10 and 1 : 8 is permitted for a rise of 3" maximum. Where compliance with the requirements for cross slope cannot be fully met, the minimum feasible cross slope shall be provided.

   Ramp running slope is not required to exceed 8' in length, except at sites where the plans specify a greater length.
4. If a curb ramp is located where pedestrians must walk across the ramp, then the walk shall have transition slopes to the ramp; the maximum slope of the transitions shall be 1 : 12. Ramps with curb returns may be used at locations where other improvements provide guidance away from that portion of curb perpendicular to the sidewalk; improvements for guidance are not required at curb ramps for linear pedestrian traffic.
5. Curb ramp detectable warning surfaces shall extend the full width of the ramp and in the direction of travel 24" from the back of curb. Detectable warning surfaces shall be constructed by texturing a truncated dome pattern in conformance with U.S. Department of Justice A.D.A. Standards For Accessible Design, A.D.A. Accessibility Guidelines, Section 4.29.2, (detail) shown above left 1. Transition slopes are not to have detectable warnings.
6. Unless otherwise called out in the plans, the ramp-detectable warning surface shall be colored in accordance with Section 35 of the Standard Specifications.
7. Where a curb ramp is constructed within existing curb, curb and gutter and/or sidewalk, the existing curb or curb and gutter shall be removed to the nearest joint beyond the curb transitions or to the extent that no remaining section of curb or curb and gutter is less than 5' long. The existing sidewalk shall be removed to the nearest joint beyond the transition slope or walk around or to the extent that no remaining section of sidewalk is less than 5' long.
8. Alpha-numeric identifications are for reference (plans, permits, etc.).
9. Public sidewalk curb ramps are to be paid for as follows:

   Ramps, reconstructed sidewalks, walk around sidewalks, sidewalk landings and sidewalk curbs are to be paid for under the contract unit price for Sidewalk Concrete, (___" Thick), SY. Curb transitions and reconstructed curbs are to be paid for under the contract unit price for the parent curb, i.e., Curb Conc., (Type ___), LF or Curb and Gutter Conc., (Type ___), LF.

   When a separate pay item for the removal and disposal of existing curb, curb and gutter, and/or sidewalk is not provided in the plans, the cost of removal and disposal of these features shall be included in the contract unit price for new curb, curb and gutter and/or sidewalk respectively.

### DESIGN NOTES

1. The color requirement in General Note 6 is to provide a dark-on-light visual contrast between the detectable warning surface and the adjacent walking surface. Where adjacent walking surfaces are colored or are constructed with materials other than standard Class I Portland Cement Concrete in accordance with Section 522 of the Standard Specifications, the plans must provide for detectable warning surface colors or materials that provide the necessary contrast, either dark-on-light or light-on-dark.

STATE OF FLORIDA DEPARTMENT OF TRANSPORTATION

**PUBLIC SIDEWALK CURB RAMPS**

| | Names | Dates | Approved By |
|---|---|---|---|
| Designed By | JRV/MT | 10/94 | Roadway Design Engineer |
| Drawn By | BW | 10/94 | Revision / Sheet No. / Index No. |
| Checked By | JRV | 10/94 | 04 / 1 of 5 / 304 |

PRELIMINARY & CONSTRUCTION PLAN SIMULTANEOUS SUBMITTAL

F.D.O.T. DETAILS
SHEET 22 OF 28

MAGNOLIA OAKS
7240 MASSACHUSETTS AVE.
NEW PORT RICHEY, FL 34653

SUBMITTAL DATE:

| REV | DATE | DESCRIPTION |
|---|---|---|
| 00 | XXX | INITIAL SUBMITTAL |

SCALE: 1" = 50.00'


GALEN JAY HOFMANN, P. E.
8620 AIRWAY BLVD.
NEW PORT RICHEY, FL 34654
P: 727-844-7686
F: 727-844-7626


GALEN J. HOFMANN P.E.
CONSULTING CIVIL ENGINEER
5-1-01
GALEN J. HOFMANN, P.E. # 21796
NOT VALID UNLESS EMBOSSED WITH A RAISED SEAL

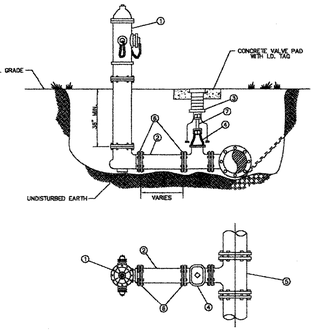


| MATERIALS | | |
|---|---|---|
| ITEM | QUANT. | DESCRIPTION |
| 1 | 1 | HYDRANT, FIRE (5 1/4" VALVE MIN.), PAINTED YELLOW |
| 2 | * | 6" PIPE, P.V.C. (DR-18) |
| 3 | 1 | BOX, VALVE SLIP TYPE |
| 4 | 1 | 6" VALVE, GATE, M.J. RESILIENT WEDGE |
| 5 | 1 | TEE, ANCHORING, M.J. |
| 6 | * | 6" RESTRAINER GLAND (MEGALUG) |
| 7 | * | VALVE EXTENSION ROD, AS NECESSARY (3' MAX. BELOW GRADE) |

Extention Shall Be Fastened To Valve Nut W/ Set Pin

| | | |
|---|---|---|
| CREATED 04/13/05<br>REVISED | FIRE HYDRANT<br>PERPENDICULAR TO THE MAIN<br>New Port Richey – Public Works | PROVIDED FOR INFORMATIONAL PURPOSES ONLY<br>NO MODIFICATIONS WITHOUT WRITTEN NPRPW APPROVAL<br>DETAIL 24 |

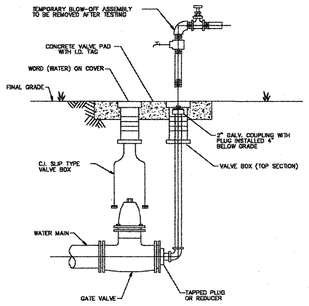


NOTES:
- MECHANICAL JOINTS/UNDERGROUND PIPING SHALL BE RESTRAINED AS SPECIFIED IN JOINT RESTRAINT TABLE (DETAIL 48)
- VALVE EXTENSION ROD SHALL BE UTILIZED, AS NECESSARY, SO THAT VALVE OPERATING NUT IS A MAXIMUM OF 3' BELOW GRADE.

Extention Shall Be Fastened To Valve Nut W/ Set Pin

| | | |
|---|---|---|
| CREATED 04/13/05<br>REVISED | PERMANENT<br>BLOW-OFF DETAIL<br>New Port Richey – Public Works | PROVIDED FOR INFORMATIONAL PURPOSES ONLY<br>NO MODIFICATIONS WITHOUT WRITTEN NPRPW APPROVAL<br>DETAIL 25 |

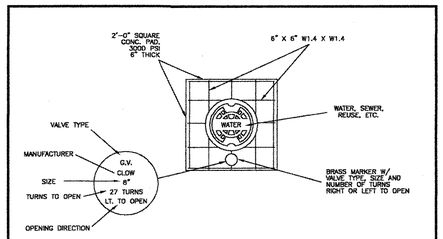


TYPICAL CONCRETE VALVE PAD

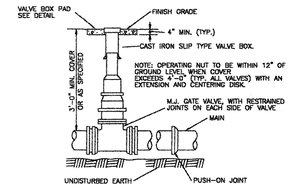


| | | |
|---|---|---|
| CREATED 04/13/05<br>REVISED | VALVE BOX DETAIL<br>SLIP TYPE<br>New Port Richey – Public Works | PROVIDED FOR INFORMATIONAL PURPOSES ONLY<br>NO MODIFICATIONS WITHOUT WRITTEN NPRPW APPROVAL<br>DETAIL 27 |

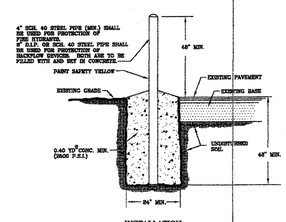


INSTALLATION

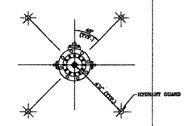


LAYOUT

TYPICAL HYDRANT GUARD

| | | |
|---|---|---|
| CREATED 05/17/05<br>REVISED | TYPICAL HYDRANT GUARD<br>New Port Richey – Public Works | PROVIDED FOR INFORMATIONAL PURPOSES ONLY<br>NO MODIFICATIONS WITHOUT WRITTEN NPRPW APPROVAL<br>DETAIL 28 |

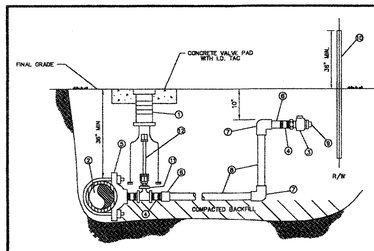


| MATERIALS | | |
|---|---|---|
| ITEM | QUANT. | DESCRIPTION |
| 1 | 1 | BOX, VALVE CAST IRON SLIP TYPE |
| 2 | * | 4" & LARGER PIPE, PVC (DR-18) OR D.I.P. (CLASS 50) |
| 3 | 2 | 1 1/2", 2" CURB STOP BALL VALVE W/ LOCK WINGS (FIP x FIP OR FIP x CTS) |
| 4 | 3 | 1 1/2", 2" NIPPLE, BRASS OR STAINLESS STEEL |
| 5 | 1 | 1 1/2", 2" SADDLE, SERVICE (I.P. THREADS) |
| 6 | 2 | 1 1/2", 2" ADAPTER (PVC SCH 40 / SLIP x FPT OR BRASS MIP x CTS) |
| 7 | 2 | 1 1/2", 2" 90° ELBOW (SLIP x SLIP) SCH 40 (NOT REQUIRED FOR HDPE) |
| 8 | * | 1 1/2", 2" PIPE, PVC (SCH 40) OR HDPE (SIDR) – LENGTH VARIES |
| 9 | 1 | 1 1/2", 2" PLUG, THREADED (W/ TEFLON TAPE) |
| 10 | 1 | 2" x 4" P.T. MARKER STAKE |
| 11 | 1 | 2" GATE VALVE, IRON BODY W/ SQUARE NUT |
| 12 | 1 | VALVE EXTENSION ROD, AS REQUIRED ( 3' MAX. BELOW GRADE) |

NOTE:
- A VALVE BOX SHALL BE REQUIRED ON ALL GATE VALVES.
- SERVICE SADDLES SHALL BE INSTALLED ON ALL TAPS TO P.V.C. (DR-18) WATER MAINS.
- 2" GATE VALVE TO BE RESILIENT WEDGE IRON BODY TYPE WITH 2" OPERATING UNIT.
- SADDLES 4" AND LARGER TO BE DUCTILE IRON DUAL STRAP TYPE.
- 1 1/2" BRASS REDUCER BUSHING REQUIRED WITH ITEM NO. 11 FOR 1 1/2" SERVICE.
- MARKER STAKES PAINTED SAFETY BLUE FOR WATER, PURPLE FOR REUSE.
- 4" DIAMETER CASING REQUIRED FOR ROAD CROSSINGS
- Extention Shall Be Fastened To Valve Nut W/ Set Pin

| | | |
|---|---|---|
| CREATED 04/13/05<br>REVISED | WATER AND REUSE LATERAL SERVICE<br>1 1/2" OR 2"<br>SERVICE LATERAL PVC (SCHEDULE 40)<br>New Port Richey – Public Works | PROVIDED FOR INFORMATIONAL PURPOSES ONLY<br>NO MODIFICATIONS WITHOUT WRITTEN NPRPW APPROVAL<br>DETAIL 20 |

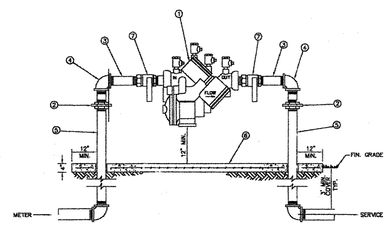


| MATERIALS | | |
|---|---|---|
| ITEM | QUANT. | DESCRIPTION |
| 1 | 1 | BACKFLOW PREVENTER ASSEMBLY, REDUCED PRESSURE ZONE |
| 2 | 2 | UNIONS – GALV. |
| 3 | 2 | NIPPLES – BRASS |
| 4 | 2 | ELBOWS – GALV. 90° |
| 5 | 2 | RISER – GALV. |
| 6 | * | CONCRETE SLAB |
| 7 | 2 | BALL VALVES – BRASS OR S.S. (PROVIDED WITH BFP ASS'Y) |

NOTE:
- FIELD ADJUST AND CUT ITEM 5 TO THE PROPER LENGTH.
- MINIMUM CLEARANCE OF 24" TO BE MAINTAINED AROUND DEVICE FOR TESTING.
- ENTIRE ASSEMBLY TO BE PAINTED SAFETY BLUE.
- CONCRETE SLAB TO EXTEND 12" MIN. AROUND ENTIRE DEVICE.
- DEVICE MUST BE LISTED WITH THE UNIVERSITY OF SOUTHERN CALIFORNIA FOUNDATION FOR CROSS CONNECTION CONTROL AND HYDRAULIC RESEARCH.

| | | |
|---|---|---|
| CREATED 04/13/05<br>REVISED | REDUCED PRESSURE<br>BACKFLOW PREVENTER<br>(SINGLE SERVICE: 3/4", 1", 1-1/2", 2")<br>New Port Richey – Public Works | PROVIDED FOR INFORMATIONAL PURPOSES ONLY<br>NO MODIFICATIONS WITHOUT WRITTEN NPRPW APPROVAL<br>DETAIL 11 |

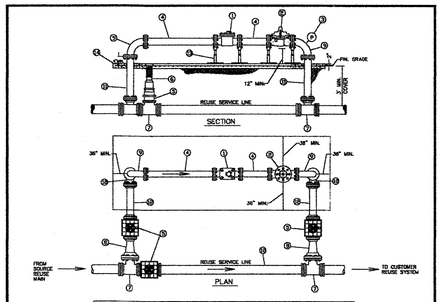


| MATERIALS | | |
|---|---|---|
| ITEM | QUANT. | DESCRIPTION |
| 1 | 1 | WATER SPECIALTIES MODEL ML-DR METER W/ MODEL TR-16 TRANSMITTER, O.E. |
| 2 | 1 | CLA-VAL ELECTRONIC SOLENOID SHUTOFF VALVE (PRESSURE REDUCING/SUSTAINING) |
| 3 | 1 | PRESSURE TRANSMITTER (PER SPEC) |
| 4 | 2 | SPOOL PIECE FLG x FLG – MANUFACTURER SPECIFIED LENGTH |
| 5 | 3 | VALVE, GATE MJ x MJ RESILIENT WEDGE W/ OPERATING NUT |
| 6 | 3 | VALVE BOX, EXTENSION TYPE, CAST IRON W/ CONCRETE PAD |
| 7 | 2 | TEE, MJ x MJ x MJ |
| 8 | 2 | REDUCER, MJ x MJ (AS NECESSARY) |
| 9 | 2 | BEND 90° FLG x FLG |
| 10 | 2 | BEND 90° MJ x MJ |
| 11 | 2 | SPOOL PIECE FLG x PE D.I.P. |
| 12 | 3 | SPOOL PIECE MJ x MJ – RESTRAINED EACH END |
| 13 | 1 | SUPPORTS (AS NEEDED) |
| 14 | 1 | CONCRETE SLAB 8" THICK W/ 6"x6" 10/10 WELDED WIRE |

NOTES:
- CONTRACTOR SHALL CONNECT INTO THE EXISTING REUSE MAIN. THE EXACT LOCATION OF TIE-IN AND METER ASSEMBLY WILL BE DETERMINED IN THE FIELD BY THE OWNER.
- THE ELECTRICAL CONDUIT FOR THE METER, CONTROL VALVE, AND PRESSURE TRANSMITTER SHALL BE INSTALLED THROUGH THE CONCRETE SLAB DIRECTLY BENEATH THE EQUIPMENT.
- NO TIE RODS OR EYE BOLT RETAINERS PERMITTED ABOVE GROUND.
- METER & VALVE ASSEMBLY TO BE INSTALLED LEVEL & PLUMB.
- MECHANICAL JOINTS/UNDERGROUND PIPING SHALL BE RESTRAINED AS SPECIFIED BY THE CITY/ENGINEER.
- ENTIRE ASSEMBLY TO BE PAINTED PURPLE (PER SPECIFICATIONS).

| | | |
|---|---|---|
| CREATED 04/13/05<br>REVISED | BULK REUSE METER<br>INSTALLATION ON EXISTING SYSTEM<br>New Port Richey – Public Works | PROVIDED FOR INFORMATIONAL PURPOSES ONLY<br>NO MODIFICATIONS WITHOUT WRITTEN NPRPW APPROVAL<br>DETAIL 15 |

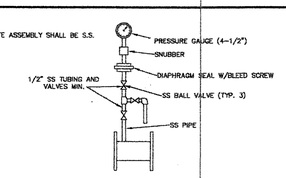


REDUCED PRESSURE PRINCIPLE
PRESSURE GAUGE BLOW OFF
13300004
NTS

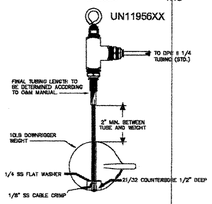


DIGITAL CONTROL CORPORATION
WET WELL PROBE ASSEMBLY
NTS

| | | |
|---|---|---|
| CREATED 04/13/05<br>REVISED | PRESSURE GUAGE BLOWOFF &<br>WET WELL PROBE ASSEMBLY<br>New Port Richey – Public Works | PROVIDED FOR INFORMATIONAL PURPOSES ONLY<br>NO MODIFICATIONS WITHOUT WRITTEN NPRPW APPROVAL<br>DETAIL 60 |

| | | | |
|---|---|---|---|
| UTILITY DETAILS (WATER)<br>SHEET 23 OF 28 | | | MAGNOLIA OAKS<br>7240 MASSACHUSETTS AVE.<br>NEW PORT RICHEY, FL 34653 |
| | | | SUBMITTAL DATE: |
| 00 | XX | INITIAL SUBMITTAL | |
| REV | DATE | DESCRIPTION | SCALE: 1" = 50.00' |


GALEN JAY HOFMANN , P. E.
8620 AIRWAY BLVD.
NEW PORT RICHEY, FL 34654
P: 727-844-7686
F: 727-844-7626


GALEN J. HOFMANN P.E.
CONSULTING CIVIL ENGINEER
5-1-08
GALEN J. HOFMANN , P.E. # 21796
NOT VALID UNLESS EMBOSSED WITH A RAISED SEAL

NOTE:
PRECAST CONCRETE SHALL ATTAIN A MINIMUM COMPRESSIVE STRENGTH OF 4,000 p.s.i. AT 28 DAYS.

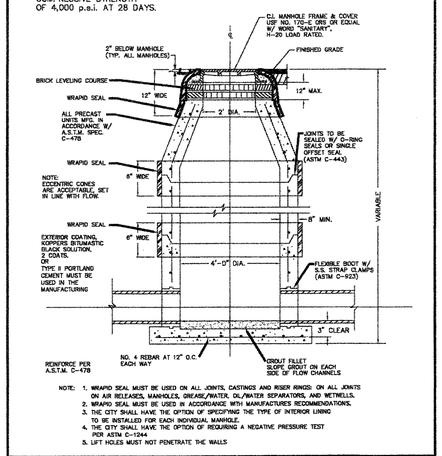


NOTE:
1. WRAPID SEAL MUST BE USED ON ALL JOINTS, CASTINGS AND RISER RINGS ON ALL ZONITE ON AIR RELEASES, MANHOLES, GREASE/WATER, OIL/WATER SEPARATORS, AND METHULLS.
2. WRAPID SEAL MUST BE USED IN ACCORDANCE WITH MANUFACTURES RECOMMENDATIONS.
3. THE CITY SHALL HAVE THE OPTION OF SPECIFYING THE TYPE OF INTERIOR LINING TO BE INSTALLED FOR EACH INDIVIDUAL MANHOLE.
4. THE CITY SHALL HAVE THE OPTION OF REQUIRING A NEGATIVE PRESSURE TEST PER ASTM C-1244
5. LIFT HOLES MUST NOT PENETRATE THE WALLS

| | | |
|---|---|---|
| CREATED 04/13/25<br>REVISED | STANDARD MANHOLE | PROVIDED FOR INFORMATIONAL PURPOSES ONLY. NO MODIFICATIONS WITHOUT WRITTEN NPRPW APPROVAL |
| | New Port Richey – Public Works | DETAIL 38 |

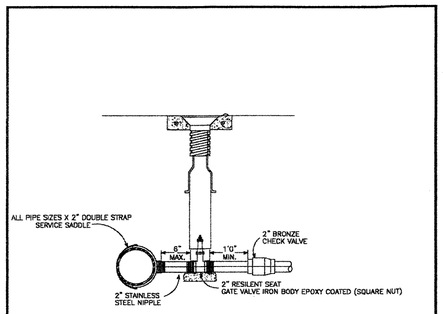


1. ALL PIPE MATERIALS FROM TAPPING SADDLE TO CHECK VALVE SHALL BE STAINLESS STEEL OR BRASS.
2. ALL PVC PIPE AND FITTINGS WITHIN ROW OR EASEMENT UP TO PROPERTY LINE/CUSTOMERS CONNECTION SHALL BE SCH 80.
3. VALVE BOX TO BE INSTALLED IN ACCORDANCE WITH DETAIL #27

| | | |
|---|---|---|
| CREATED 04/13/25<br>REVISED | TYPICAL RESIDENTIAL FORCE MAIN TAP | PROVIDED FOR INFORMATIONAL PURPOSES ONLY. NO MODIFICATIONS WITHOUT WRITTEN NPRPW APPROVAL |
| | New Port Richey – Public Works | DETAIL 55 |

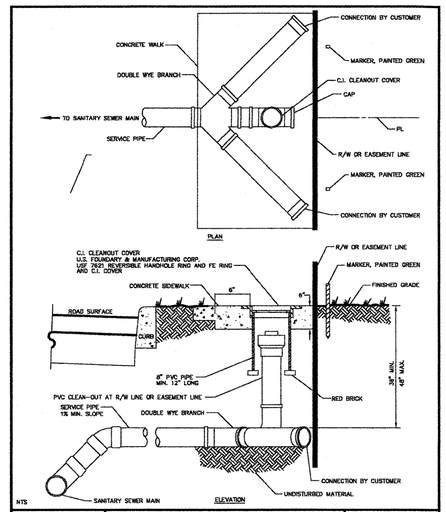


| | | |
|---|---|---|
| CREATED 04/13/25<br>REVISED | SANITARY SEWER – DOUBLE WYE CONNECTION AND TYPICAL CLEAN-OUT | PROVIDED FOR INFORMATIONAL PURPOSES ONLY. NO MODIFICATIONS WITHOUT WRITTEN NPRPW APPROVAL |
| | New Port Richey – Public Works | DETAIL 43 |

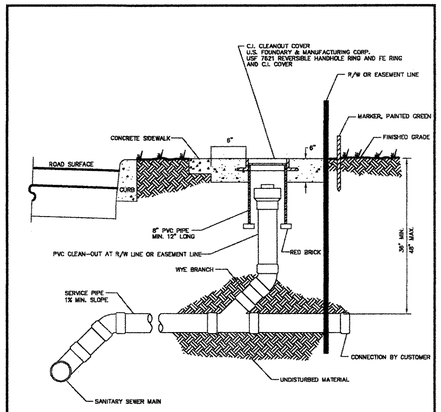


| | | |
|---|---|---|
| CREATED 04/13/25<br>REVISED | SANITARY SEWER – SINGLE WYE CONNECTION AND TYPICAL CLEAN-OUT | PROVIDED FOR INFORMATIONAL PURPOSES ONLY. NO MODIFICATIONS WITHOUT WRITTEN NPRPW APPROVAL |
| | New Port Richey – Public Works | DETAIL 42 |

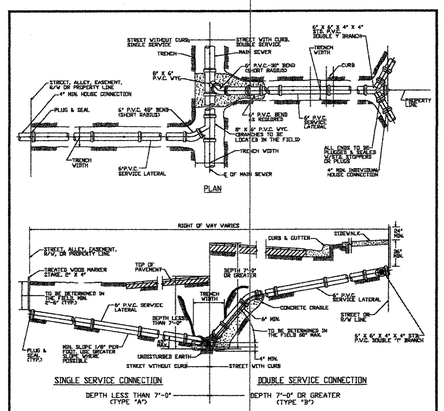


NOTE:
- CONTRACTOR SHALL MAKE, ON A CLEAN SET OF PLANS, THE FINAL STATIONING OR DISTANCE AND DIRECTION FROM MANHOLE OF EACH SERVICE LATERAL AND THEN GIVE TO ENGINEER FOR RECORD PURPOSES.
- PROVIDE 6" x 4" PRESSURE TREATED WOOD MARKER STAKE AT ALL SANITARY SERVICES (INCLUDE IN PIPE PROCE). TOP OF STAKE TO BE PAINTED WITH GREEN PAINT.
- THE MINIMUM DIAMETER OF ALL SERVICE LATERALS SHALL BE 6 INCHES.

| | | |
|---|---|---|
| CREATED 04/13/25<br>REVISED | SEWER LATERAL CONNECTION | PROVIDED FOR INFORMATIONAL PURPOSES ONLY. NO MODIFICATIONS WITHOUT WRITTEN NPRPW APPROVAL |
| | New Port Richey – Public Works | DETAIL 41 |

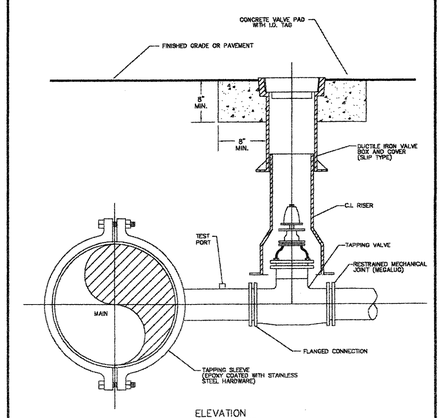


NOTES:
- SADDLE CONNECTION WILL BE TESTED TO 150 PSI PRIOR TO TAPPING MAIN.
- MECHANICAL JOINTS/UNDERGROUND PIPING SHALL BE RESTRAINED AS SPECIFIED BY THE CITY/ENGINEER.
- VALVE EXTENSION ROD SHALL BE UTILIZED, AS NECESSARY, SO THAT VALVE OPERATING NUT IS A MAXIMUM OF 3' BELOW GRADE.

| | | |
|---|---|---|
| CREATED 04/13/25<br>REVISED | WATER, REUSE, AND FORCE MAIN TAPPING DETAIL W/ VALVE LOCATION | PROVIDED FOR INFORMATIONAL PURPOSES ONLY. NO MODIFICATIONS WITHOUT WRITTEN NPRPW APPROVAL |
| | New Port Richey – Public Works | DETAIL 34 |

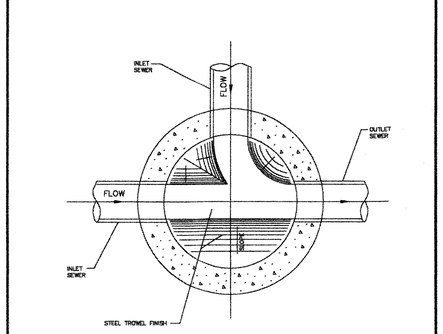


| | | |
|---|---|---|
| CREATED 04/13/25<br>REVISED | STANDARD MANHOLE (BENCH AND INVERTS) | PROVIDED FOR INFORMATIONAL PURPOSES ONLY. NO MODIFICATIONS WITHOUT WRITTEN NPRPW APPROVAL |
| | New Port Richey – Public Works | DETAIL 36 |

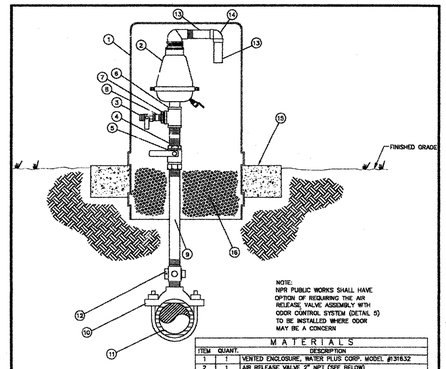


NOTE:
NPR PUBLIC WORKS SHALL HAVE OPTION OF REQUIRING THE AIR RELEASE VALVE ASSEMBLY WITH ODOR CONTROL SYSTEM (DETAIL 5) TO BE INSTALLED WHERE ODOR MAY BE A CONCERN

NOTE:
VENTED ENCLOSURE TO BE COLOR CODED AS FOLLOWS:

WATER MAIN – BLUE
FORCE MAIN – GREEN
REUSE MAIN – PURPLE

MATERIALS

| ITEM | QUANT. | DESCRIPTION |
|---|---|---|
| 1 | 1 | VENTED ENCLOSURE, WATER PLUS CORP. MODEL #31632 |
| 2 | 1 | AIR RELEASE VALVE 2" NPT (SEE BELOW) SEWER AIR RELEASE VALVES SHALL BE AIR MODEL D-025 WATER AIR RELEASE VALVES SHALL BE VALMATIC OR EQUAL |
| 3 | 1 | 1" CURB STOP, S.S. |
| 4 | 1 | 2" x 4" NIPPLE, S.S. |
| 5 | 1 | 2" BALL VALVE, S.S. |
| 6 | 1 | 2" TEE, S.S. |
| 7 | 1 | 2" X 1" REDUCER, S.S. |
| 8 | 1 | 1" SHORT NIPPLE, S.S. |
| 9 | 1 | 3" PIPE, S.S. LENGTH AS REQUIRED |
| 10 | 1 | 2" DOUBLE STRAP TAPPING SADDLE, S.S. |
| 11 | 1 | 4" & LARGER PIPE, D.I. OR PVC (DR-18) |
| 12 | 1 | 2" CORPORATION BRASS |
| 13 | 2 | 1-1/2" PIPE, PVC, LENGTH AS REQUIRED |
| 14 | 1 | 1-1/2" x 90° ELBOW, PVC |
| 15 | 1 | CONCRETE SLAB AROUND ENCLOSURE |
| 16 | 1 | #57 WHITE ROCK |

| | | |
|---|---|---|
| CREATED 04/13/25<br>REVISED | STANDARD AIR RELEASE VALVE ASSEMBLY (VERTICAL PIPE LAYOUT) | PROVIDED FOR INFORMATIONAL PURPOSES ONLY. NO MODIFICATIONS WITHOUT WRITTEN NPRPW APPROVAL |
| | New Port Richey – Public Works | DETAIL 4 |

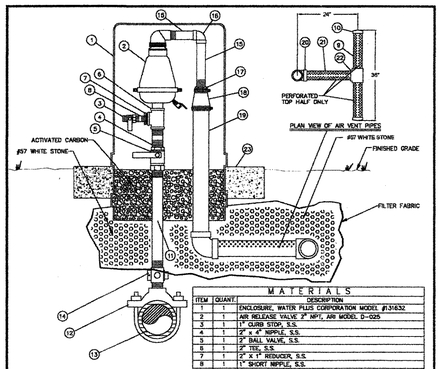


NOTE:
ENCLOSURE SHALL BE COLOR CODED GREEN

MATERIALS

| ITEM | QUANT. | DESCRIPTION |
|---|---|---|
| 1 | 1 | ENCLOSURE, WATER PLUS CORPORATION MODEL #31632 |
| 2 | 1 | AIR RELEASE VALVE 2" NPT, ARI MODEL D-025 |
| 3 | 1 | 1" CURB STOP, S.S. |
| 4 | 1 | 2" x 4" NIPPLE, S.S. |
| 5 | 1 | 2" BALL VALVE, S.S. |
| 6 | 1 | 2" TEE, S.S. |
| 7 | 1 | 2" X 1" REDUCER, S.S. |
| 8 | 1 | 1" SHORT NIPPLE, S.S. |
| 9 | 2 | 3" PIPE, PVC, LENGTH AS SHOWN,PERFORATED TOP HALF ONLY |
| 10 | 2 | 3" CAP, PVC |
| 11 | 1 | 2" PIPE, S.S. LENGTH AS REQUIRED |
| 12 | 1 | 2" DOUBLE STRAP TAPPING SADDLE, D.I. |
| 13 | 1 | 4" & LARGER PIPE, D.I. OR PVC (DR-18) |
| 14 | 1 | 2" CORPORATION BRASS |
| 15 | 2 | 1-1/2" PIPE, PVC, LENGTH AS REQUIRED |
| 16 | 1 | 1-1/2" x 90° ELBOW, PVC |
| 17 | 1 | 2" X 1-1/2" REDUCER, PVC |
| 18 | 1 | 3" X 2" FLEX COUPLING |
| 19 | 1 | 3" PIPE, PVC, LENGTH AS REQUIRED |
| 20 | 1 | 3" x 90° ELBOW, PVC |
| 21 | 1 | 3" PIPE, PVC, LENGTH AS SHOWN,PERFORATED TOP HALF ONLY |
| 22 | 1 | 3" TEE, PVC |
| 23 | 1 | CONCRETE SLAB AROUND ENCLOSURE |

| | | |
|---|---|---|
| CREATED 04/13/25<br>REVISED | SEWER AIR RELEASE VALVE ASSEMBLY WITH ODOR CONTROL SYSTEM (VERTICAL PIPE LAYOUT) | PROVIDED FOR INFORMATIONAL PURPOSES ONLY. NO MODIFICATIONS WITHOUT WRITTEN NPRPW APPROVAL |
| | New Port Richey – Public Works | DETAIL 5 |

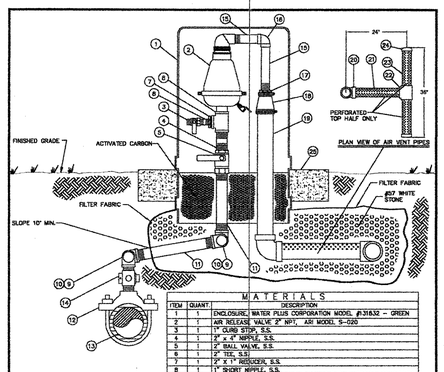


MATERIALS

| ITEM | QUANT. | DESCRIPTION |
|---|---|---|
| 1 | 1 | ENCLOSURE, WATER PLUS CORPORATION MODEL #31632 – GREEN |
| 2 | 1 | AIR RELEASE VALVE 2" NPT, ARI MODEL S-020 |
| 3 | 1 | 1" CURB STOP, S.S. |
| 4 | 1 | 2" x 4" NIPPLE, S.S. |
| 5 | 1 | 2" BALL VALVE, S.S. |
| 6 | 1 | 2" TEE, S.S. |
| 7 | 1 | 2" X 1" REDUCER, S.S. |
| 8 | 1 | 1" SHORT NIPPLE, S.S. |
| 9 | 4 | 2" x 90° ELBOW, S.S. |
| 10 | 2 | 2" SHORT NIPPLE, S.S. |
| 11 | 2 | 2" PIPE, S.S. LENGTH AS REQUIRED |
| 12 | 1 | 2" DOUBLE STRAP TAPPING SADDLE, S.S. |
| 13 | 1 | 4" & LARGER PIPE, D.I. OR PVC (DR-18) |
| 14 | 1 | 2" CORPORATION BRASS |
| 15 | 2 | 1-1/2" PIPE, PVC LENGTH AS REQUIRED |
| 16 | 1 | 1-1/2" x 90° ELBOW, PVC |
| 17 | 1 | 2" X 1-1/2" REDUCER, PVC |
| 18 | 1 | 2" X 2" FLEX COUPLING |
| 19 | 1 | 2" PIPE, PVC, LENGTH AS REQUIRED |
| 20 | 1 | 2" x 90° ELBOW, PVC |
| 21 | 1 | 2" PIPE, PVC, LENGTH AS SHOWN,PERFORATED TOP HALF ONLY |
| 22 | 1 | 2" TEE, PVC |
| 23 | 2 | 2" PIPE, PVC, LENGTH AS SHOWN,PERFORATED TOP HALF ONLY |
| 24 | 2 | 2" CAP, PVC |
| 25 | 1 | CONCRETE SLAB AROUND ENCLOSURE |

| | | |
|---|---|---|
| CREATED 04/13/25<br>REVISED | SEWER AIR RELEASE VALVE ASSEMBLY WITH ODOR CONTROL SYSTEM AND COVER ABOVE GROUND OFFSET PIPE LAYOUT | PROVIDED FOR INFORMATIONAL PURPOSES ONLY. NO MODIFICATIONS WITHOUT WRITTEN NPRPW APPROVAL |
| | New Port Richey – Public Works | DETAIL 7 |

UTILITY DETAILS (WASTE WATER)

SHEET 24 OF 28

MAGNOLIA OAKS
7240 MASSACHUSETTS AVE.
NEW PORT RICHEY, FL 34653

SUBMITTAL DATE:

| REV | DATE | DESCRIPTION |
|---|---|---|
| 00 | XX | INITIAL SUBMITTAL |

SCALE: 1" = 50.00'


GALEN JAY HOFMANN , P. E.
8620 AIRWAY BLVD.
NEW PORT RICHEY, FL 34654
P: 727-844-7686
F: 727-844-7686

GALEN J. HOFMANN P.E.
CONSULTING CIVIL ENGINEER
5-1-25
GALEN J. HOFMANN , P.E. # 21796
NOT VALID UNLESS EMBOSSED WITH A RAISED SEAL

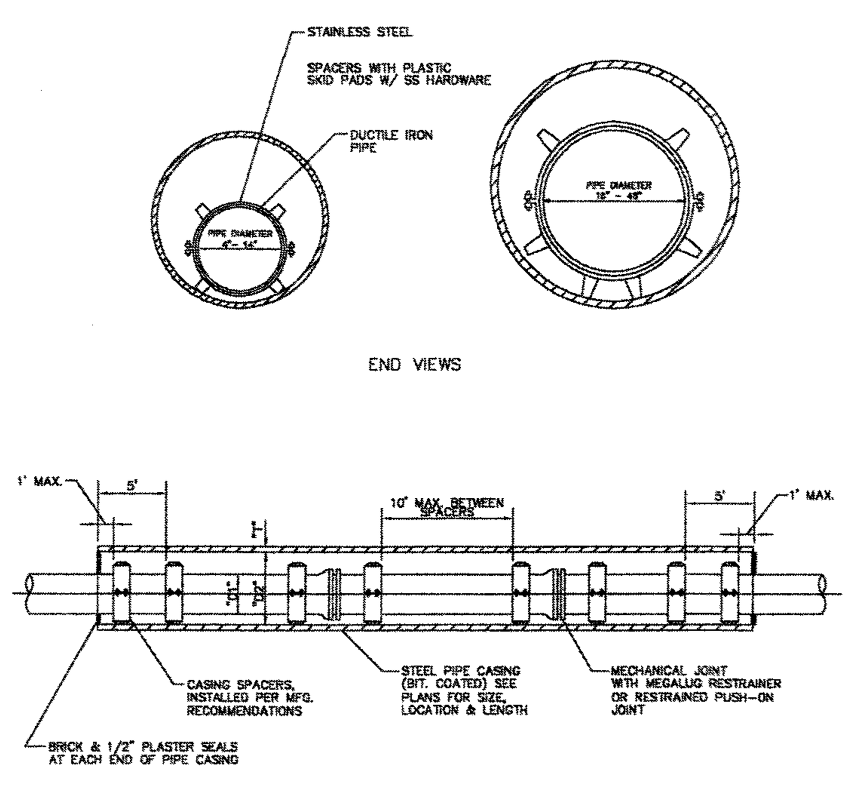


NOTE:
- CARRIER PIPE FOR WATER & REUSE MAINS SHALL BE CEMENT MORTAR LINED D.I.P.
- CARRIER PIPE FOR SEWER/FORCE MAINS SHALL BE GLASS FLAKE EPOXY (PROTECTO 401) OR POLYETHYLENE LINED D.I.P.
- CARRIER PIPE TO BE COLOR CODED WITH PAINT STRIPES:
  - WATER – BLUE
  - REUSE – PURPLE
  - SEWER – GREEN
- CASING SHALL EXTEND 8' MINIMUM BEYOND EDGE OF PAVEMENT.

CREATED 04/13/05
REVISED

JACK & BORE
CARRIER DETAIL

PROVIDED FOR INFORMATIONAL PURPOSES ONLY. NO MODIFICATIONS WITHOUT WRITTEN NPRPW APPROVAL

New Port Richey – Public Works — DETAIL 30

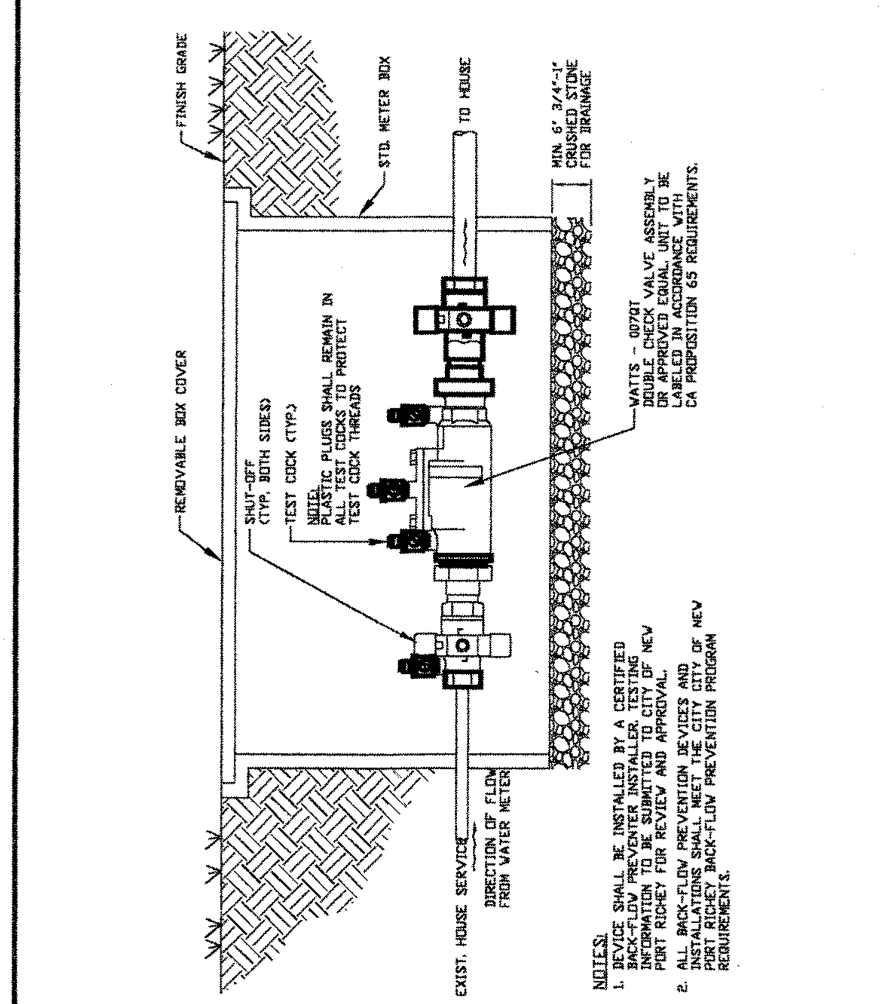


NOTES:
1. DEVICE SHALL BE INSTALLED BY A CERTIFIED BACK-FLOW PREVENTER INSTALLER. TESTING INFORMATION TO BE SUBMITTED TO CITY OF NEW PORT RICHEY FOR REVIEW AND APPROVAL.
2. ALL BACK-FLOW PREVENTION DEVICES AND INSTALLATIONS SHALL MEET THE CITY CITY OF NEW PORT RICHEY BACK-FLOW PREVENTION PROGRAM REQUIREMENTS.

CREATED 07/18/05
REVISED

Dpuble Check Valve
Below Ground Installation Detail

PROVIDED FOR INFORMATIONAL PURPOSES ONLY. NO MODIFICATIONS WITHOUT WRITTEN NPRPW APPROVAL

New Port Richey – Public Works — DETAIL 64

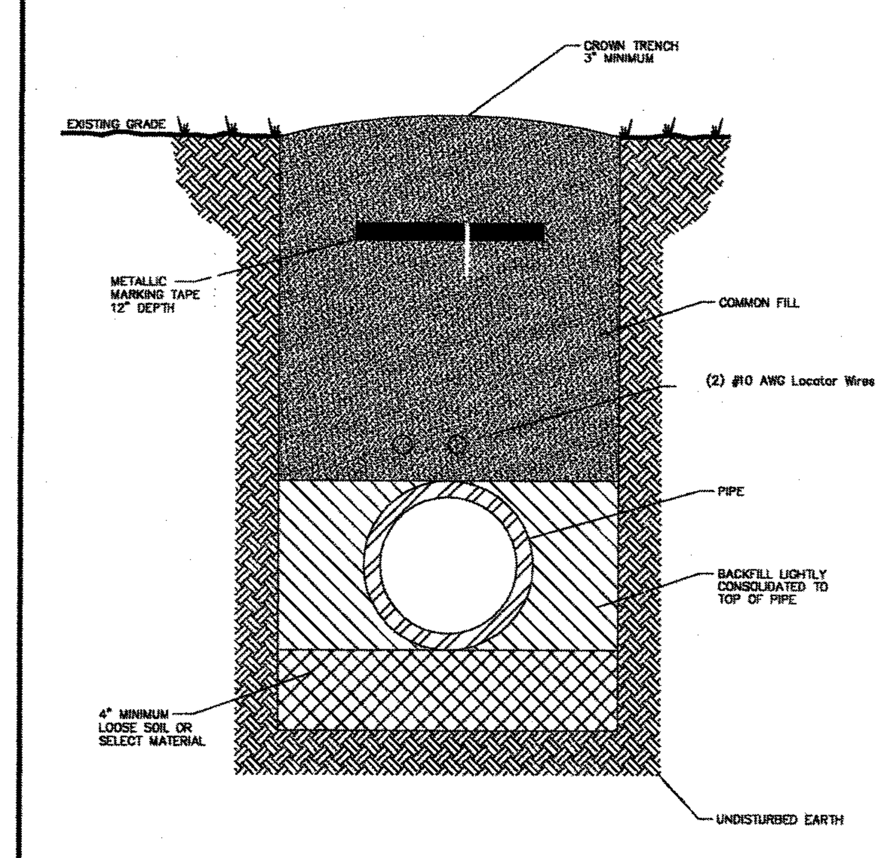


NOTES: –LOOSE SOIL OR SELECT MATERIAL IS NATIVE SOIL EXCAVATED FROM THE TRENCH FREE OF ROCKS AND FOREIGN MATERIAL.
–COMMON FILL TO BE PLACED AND COMPACTED IN 12" LAYERS. ROLLING EQUIPMENT SHALL NOT BE USED FOR COMPACTION UNTIL A MINIMUM OF 18" OF COMMON FILL HAS BEEN PLACED AND COMPACTED OVER THE PIPE. THREE FEET OF FILL SHALL BE PLACED BEFORE A HYDROHAMMER MAY BE USED FOR COMPACTION.

NTS

CREATED 04/13/05
REVISED

PIPE LAYING CONDITIONS
STANDARD UNPAVED AREAS

PROVIDED FOR INFORMATIONAL PURPOSES ONLY. NO MODIFICATIONS WITHOUT WRITTEN NPRPW APPROVAL

New Port Richey – Public Works — DETAIL 32

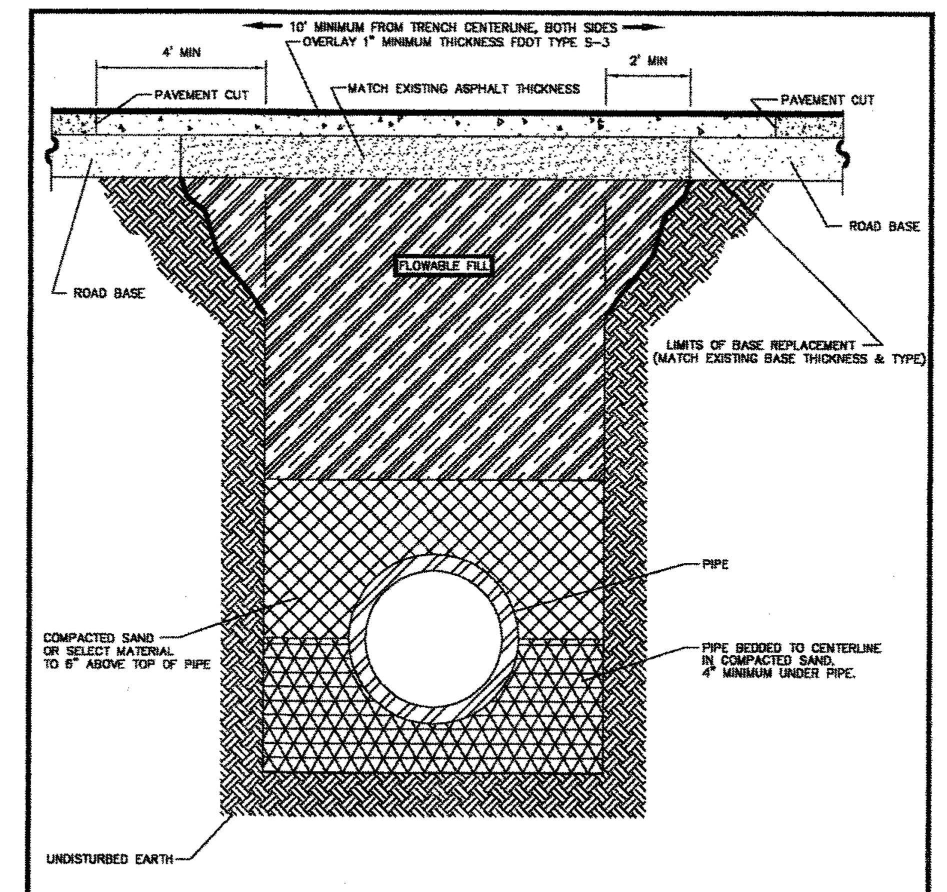


NOTE: –SELECT MATERIAL IS NATIVE SOIL EXCAVATED FROM THE TRENCH FREE OF ROCKS AND FOREIGN MATERIAL.
–COMPACTION TO TOP OF PILE IS TO BE APPROXIMATELY 90% STANDARD PROCTOR, AASHTO T-99.
–EXISTING CONCRETE/ASPHALT PAVEMENT SURFACE AND BASE TO BE CUT SQUARE WITH CONCRETE SAW.

NTS

CREATED 04/13/05
REVISED

PIPE LAYING CONDITIONS
FLOWABLE FILL BACKFILL
STANDARD EXISTING PAVED AREAS & ROADWAYS

PROVIDED FOR INFORMATIONAL PURPOSES ONLY. NO MODIFICATIONS WITHOUT WRITTEN NPRPW APPROVAL

New Port Richey – Public Works — DETAIL 33

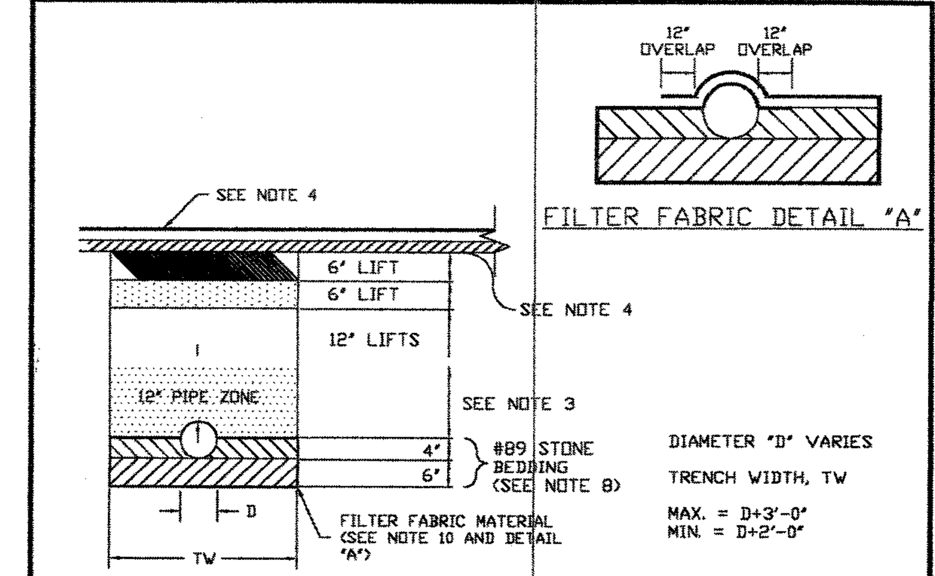


GENERAL NOTES

1. BACKFILL MATERIAL CONTAMINATED DURING EXCAVATION WITH DELETERIOUS SUBSTANCES, ORGANIC MATERIAL OR ROCK GREATER THAN 3" IN DIAMETER DURING EXCAVATION SHALL NOT BE USED.
2. BASE MATERIAL SHALL BE CRUSHED CONCRETE, LARGE AGGREGATE (LBR 100). COMPACT TO 100% AASHTO T-180. BASE SHALL BE CONSTRUCTED IN TWO COURSES AND PRIMED. EACH COURSE SHALL BE TESTED TO MEET DENSITY REQUIREMENTS.
3. GRANULAR MATERIAL SHALL BE CAREFULLY PLACED AND TAMPED AROUND THE LOWER HALF OF THE UTILITY BEFORE BACKFILLING TO THE TOP OF THE PIPE. REFER TO NOTE 8 FOR AREAS BELOW WATER TABLE. COMPACT PIPE ZONE BACKFILL USING HAND OPERATED TAMPING DEVICES TO 100% MAXIMUM DENSITY – AASHTO T-99.
4. THE AREA OF THE TRENCH ABOVE THE PIPE ZONE AND BELOW THE BASE COURSE MUST BE BACKFILLED AND COMPACTED IN LAYERS NOT EXCEEDING TWELVE INCHES, EXCEPT THAT THE LAST TWO LIFTS SHALL NOT EXCEED SIX INCHES PER LIFT. COMPACT EACH LIFT TO 100% MAXIMUM DENSITY – AASHTO T-99.
5. REFER TO "TYPICAL ROADWAY SECTION" FOR PAVEMENT REQUIREMENTS.
6. IF PAVEMENT HAS SHOULDER, SHOULDER TO EXTEND EIGHT FEET FROM EDGE OF PAVEMENT. USE LBR 30 (OR BETTER) FILL MATERIAL IN TOP 24 INCHES OF TRENCH, IN 12" LIFTS. COMPACT TO 100% AASHTO T-99, METHOD C OR D.
7. ALL FILL UP TO THE SPRING LINE OF THE PIPE MUST BE HAND TAMPED.
8. FOR UTILITIES IN ROCK OR OTHER NONCUSHIONING MATERIAL, THE TRENCH SHALL BE EXCAVATED 6-INCHES BELOW THE BOTTOM OF THE PIPE AND BACKFILLED WITH #89 STONE BEDDING MATERIAL. IN WET CONDITIONS WHERE WATER TABLE IS APPARENT, #89 STONE SHALL BE PLACED UP TO THE SPRING LINE OF THE PIPE.
9. FOR ADDITIONAL INFORMATION, REFER TO DIVISION B – TECHNICAL REQUIREMENTS, SECTION B1, OF THE CONTRACT DOCUMENTS.
10. STONE BEDDING TO BE ENVELOPED IN NONWOVEN FILTER FABRIC IN ACCORDANCE WITH FDOT INDEX No. 199, TYPE "D-3" AND CONFORMING TO FDOT SSRBC SECTION 985, GEOTEXTILE FABRICS. FILTER FABRIC SHALL OVERLAP TO A MINIMUM OF 12" BEYOND PIPE ON BOTH SIDES.

CREATED 9/23/05
REVISED

TRENCH & PIPE
BACKFILL DETAIL

PROVIDED FOR INFORMATIONAL PURPOSES ONLY. NO MODIFICATIONS WITHOUT WRITTEN NPRPW APPROVAL

New Port Richey –Public Works — DETAIL 65

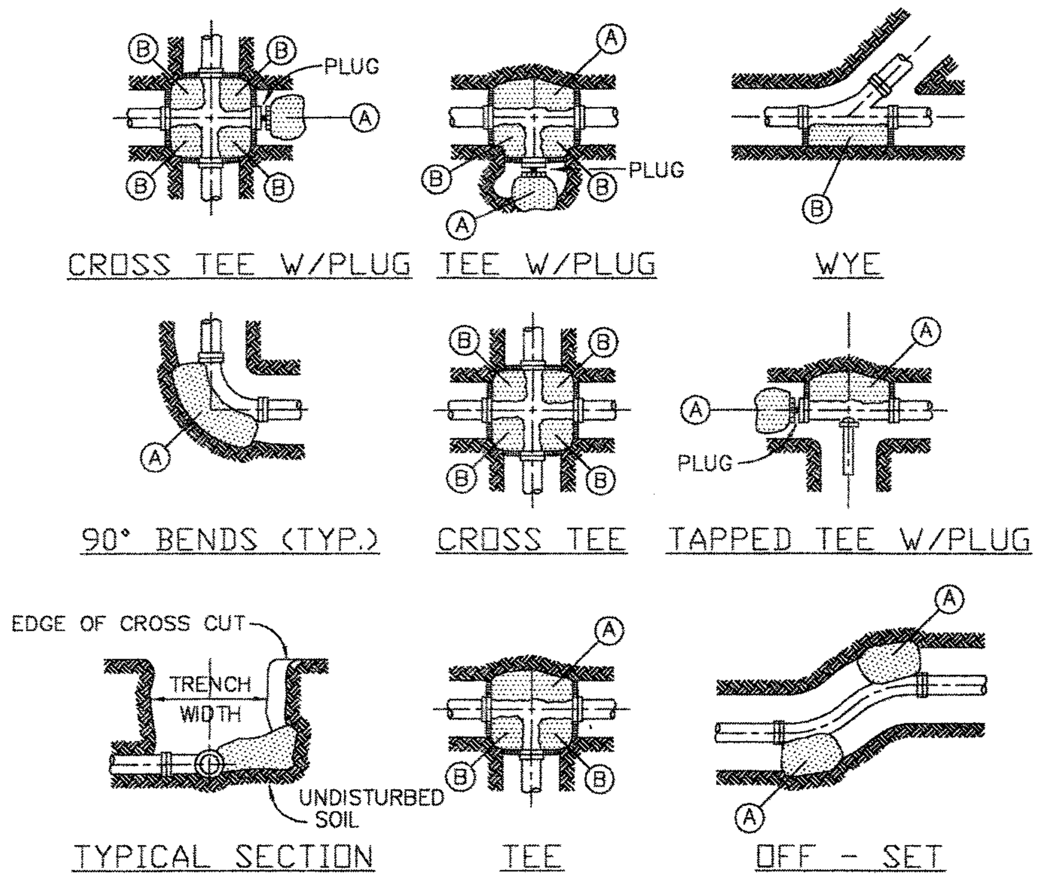


NOTES :

1. POUR THRUST BLOCKS AGAINST UNDISTURBED MATERIAL. WHERE TRENCH WALL HAS BEEN DISTURBED, EXCAVATE LOOSE MATERIAL AND EXTEND THRUST BLOCK TO UNDISTURBED MATERIAL.
2. ON BENDS AND TEES, EXTEND THRUST BLOCK FULL LENGTH.
3. PLACE BOARD IN FRONT OF ALL PLUGS BEFORE POURING THRUST BLOCK.
4. ANY MUCK ENCOUNTERED IN EXCAVATION SHALL BE REMOVED AND REPLACED WITH ACCEPTABLE MATERIAL.
5. NO COUPLING OR JOINTS SHALL BE COVERED WITH CONCRETE.
6. SIZES ARE BASED ON 150 p.s.i. INTERNAL PRESSURE AND 2000 lb/FT.$^2$ SOIL BEARING CAPACITY.
7. CONCRETE SHALL BE CLASS B.

| PIPE SIZE | 4" | 6" | 8" | 10" | 12" | 14" | 16" | 20" |
|---|---|---|---|---|---|---|---|---|
| (A) | 1.5 | 3 | 6 | 9 | 12 | 16 | 20 | 22 |
| (B) | 1 | 2 | 4 | 5 | 8 | 10 | 12 | 15 |

SQUARE FEET OF CONCRETE THRUST BLOCKING BEARING ON UNDISTURBED MATERIAL

## THRUST BLOCK

N.T.S.

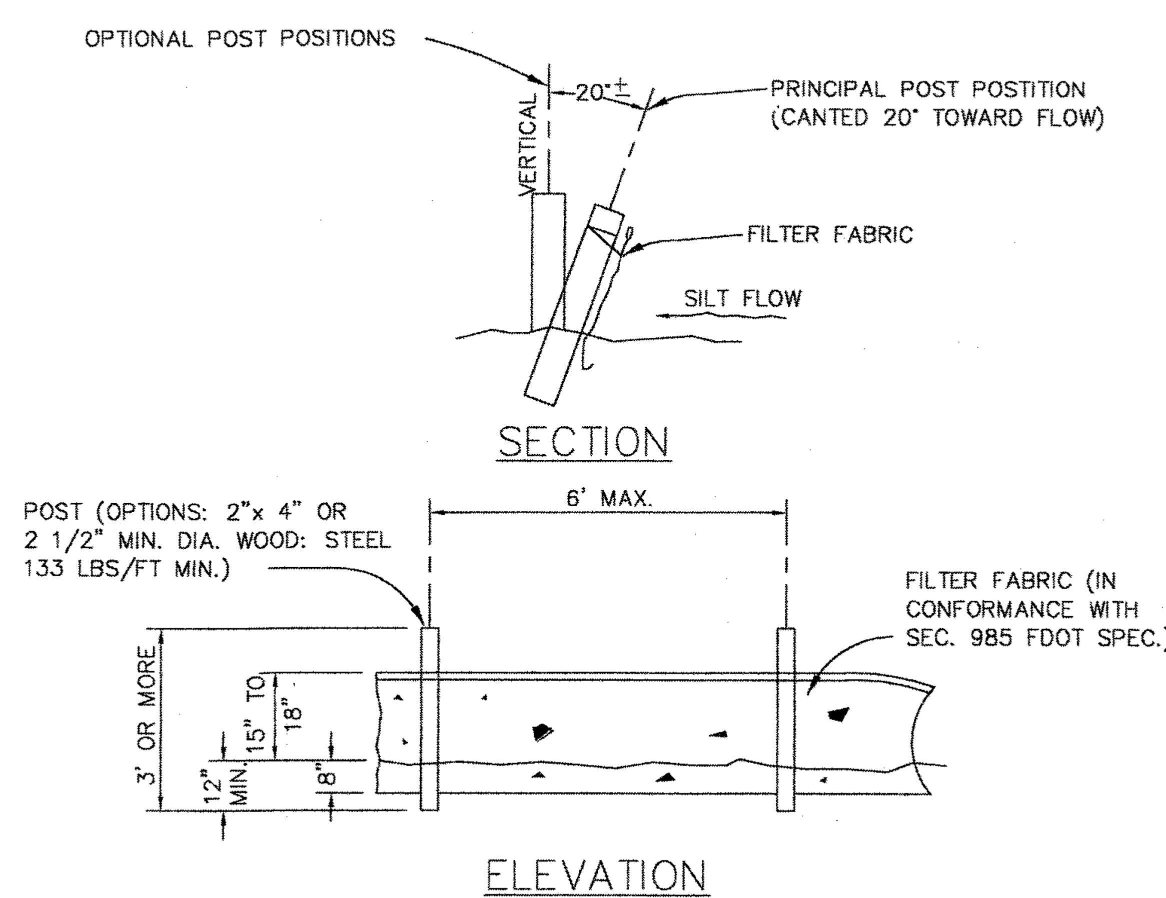


## TYPE III SILT FENCE

D.O.T. INDEX #102 N.T.S.

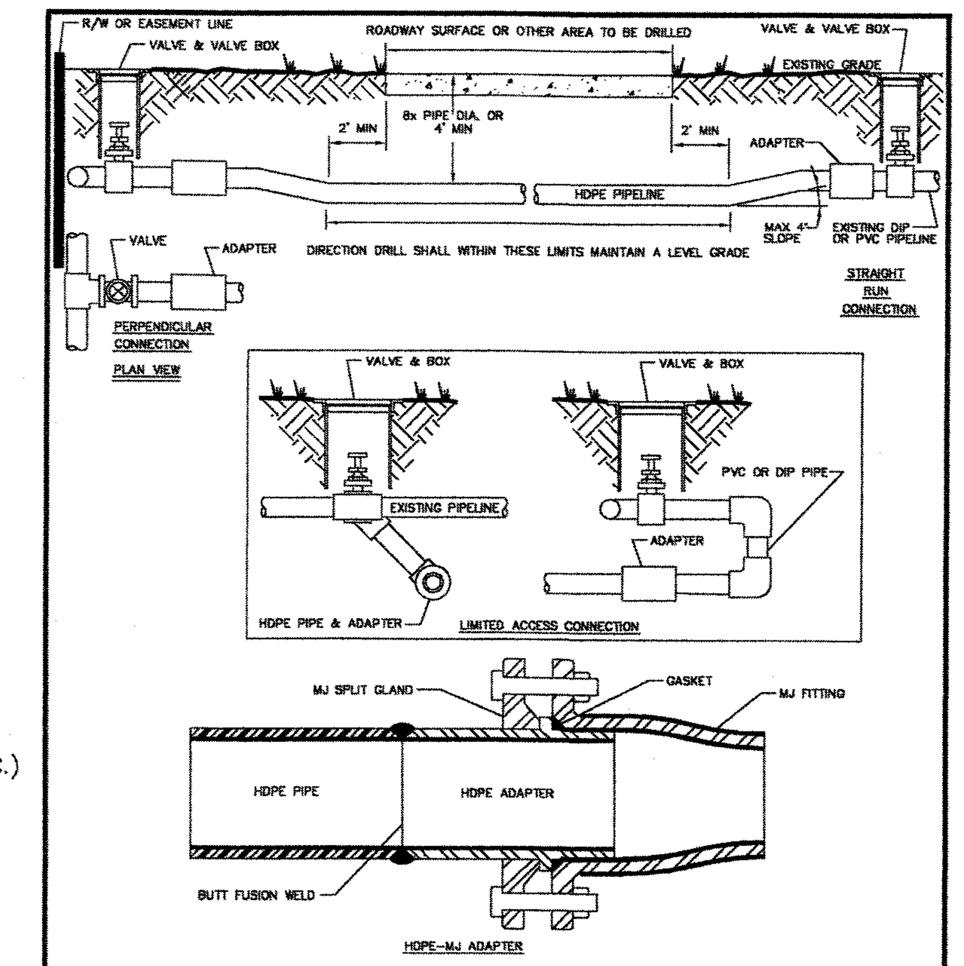


NOTE: –DIRECTIONAL DRILLS SHALL BE COMPLETED USING DR11 HDPE PIPE, DUCTILE IRON SIZE.
– ALL DIRECTIONAL DRILLS SHALL BE AT A DEPTH OF 8x PIPE DIAMETER BELOW THE ROADWAY SURFACE OR 4' WHICHEVER IS GREATER.
–ALL HDPE MUST BE COLOR CODED (SAFETY BLUE–WATER, SAFETY GREEN FOR SEWER AND PANTONE PURPLE FOR RECLAIMED WATER); BUTT FUSION WELDED; AND CONNECTED WITH HDPE–MJ ADAPTER.

CREATED 04/13/05
REVISED

DIRECTIONAL DRILLING

PROVIDED FOR INFORMATIONAL PURPOSES ONLY. NO MODIFICATIONS WITHOUT WRITTEN NPRPW APPROVAL

New Port Richey – Public Works — DETAIL 31

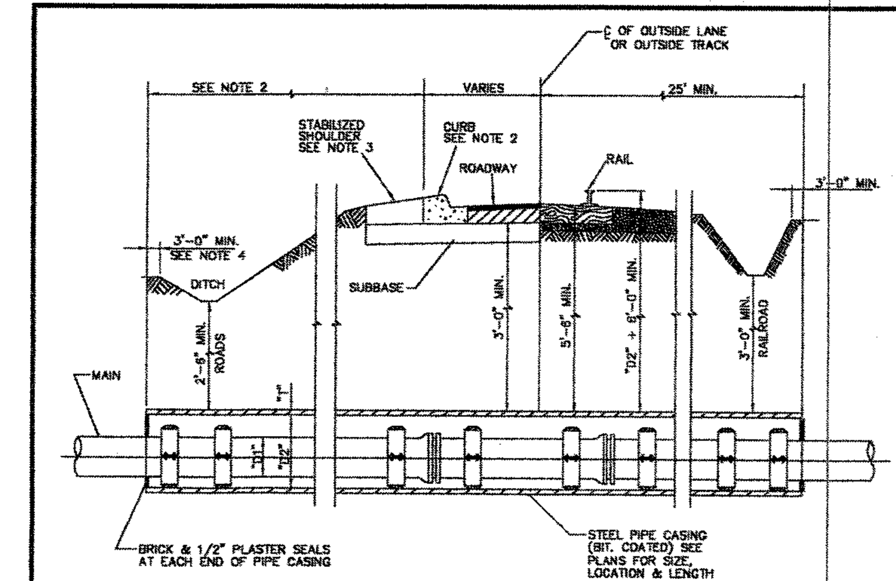


NOTE:
1. VERTICAL DIMENSIONS ARE TYPICAL FOR MAINS.
2. CASINGS SHALL TERMINATE 8' MINIMUM BEYOND EDGE OF PAVEMENT.
3. CASINGS SHALL HAVE 30" MINIMUM COVER UNDER DITCH BOTTOMS AND 36" ELSEWHERE.
4. GRAVITY SEWERS SHALL BE PROPERLY ANCHORED TO PREVENT FLOATATION WITH SPACERS ADJUSTED TO PROVIDE THE SLOPE REQUIRED.
5. SEE SECTION B.2 FOR CASING SIZE.

| CARRIER PIPE (INCHES) | CASING PIPE (INCHES) | CASING WALL THICKNESS (INCHES) |
|---|---|---|
| 4 | 12 | 1/4 |
| 6 | 16 | 1/4 |
| 8 | 16 | 1/4 |
| 10 | 24 | 5/16 |
| 12 | 24 | 5/16 |
| 16 | 30 | 3/8 |
| 20 | 36 | 3/8 |
| 24 | 42 | 3/8 |
| 30 | 48 | 3/8 |
| 36 | 54 | 1/2 |
| 42 | 60 | 1/2 |
| 48 | 66 | 1/2 |

CREATED 04/13/05
REVISED

JACK & BORE
DETAIL

PROVIDED FOR INFORMATIONAL PURPOSES ONLY. NO MODIFICATIONS WITHOUT WRITTEN NPRPW APPROVAL

New Port Richey – Public Works — DETAIL 35

MISCELLANEOUS DETAILS

SHEET 25 OF 28

MAGNOLIA OAKS
7240 MASSACHUSETTS AVE.
NEW PORT RICHEY, FL 34653

SUBMITTAL DATE:

| REV | DATE | DESCRIPTION |
|---|---|---|
| 00 | XX | INITIAL SUBMITTAL |

SCALE: 1" = 50.00'

GALEN JAY HOFMANN , P. E.
8620 AIRWAY BLVD.
NEW PORT RICHEY, FL 34654
P: 727-844-7686
F: 727-844-7626

GALEN J. HOFMANN P.E.
CONSULTING CIVIL ENIGINEER
5-1-08
GALEN J. HOFMANN, P.E. # 21796
NOT VALID UNLESS EMBOSSED WITH A RAISED SEAL

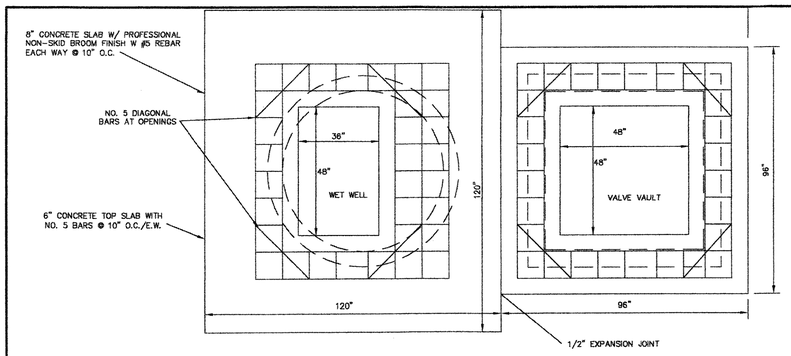


## GENERAL NOTES:

1. PUMPS SHALL BE AS SPECIFIED
2. WET WELL AND VALVE VAULT SHALL BE COATED INSIDE WITH SPECTRA SHEILD.
3. VALVE VAULT SHALL BE SIZED TO PERMIT EASY REMOVAL OF CHECK VALVE
4. VALVE VAULT SHALL HAVE SEALED FLOOR W/DRAIN TO WET WELL
5. ALL LOCATIONS WHERE PIPES ENTER OR LEAVE THE WET WELL OR VALVE VAULT SHALL BE MADE WATERTIGHT WITH WALL SLEEVE OR NON-SHRINK GROUT.
6. PUMP LIFTING DEVICE SHALL BE GRIP-EYE, 316 SS CHAIN, OR 316 SS LIFTING CABLE, WITH LIFT RINGS.
7. THERE SHALL BE NO ELECTRICAL JUNCTION BOXES IN WET WELL.
8. CHECK VALVES SHALL BE OUTSIDE WEIGHT & LEVER TYPE.
9. WET WELL & VALVE VAULT COVERS SHALL BE ALUMINUM WITH WATERPROOF GASKETS AND 316 SS HARDWARE AS SUPPLIED AND REQUIRED BY PUMP MANUFACTURER (LOADING 300 PSF).
10. CONTRACTOR TO PREVENT FLOATATION OF LIFT STATION DURING ALL PHASES OF CONSTRUCTION. SEE NOTE, REQUIRED C.Y. OF BALLAST.
11. CONTRACTOR TO PROVIDE SIGNED AND SEALED ELECTRIC COMPONENT PLANS AND SPECIFICATIONS FOR LIFT STATION AND COMPONENTS.
12. THE CONTRACTOR SHALL NOTIFY THE ENGINEER AT LEAST 3 DAYS PRIOR TO PUMP STATION WET WELL EXCAVATION. THE ENGINEER WILL SCHEDULE THE GEOTECHNICAL ENGINEER TO EXAMINE THE EXCAVATION AT DESIGN DEPTH TO DETERMINE THE SUITABILITY OF THE LIMESTONE TO SUPPORT THE ANTICIPATED LEADS. OVER-EXCAVATION TO A DEPTH DETERMINED BY THE GEOTECHNICAL ENGINEER MAY BE REQUIRED TO REACH SUITABLE MATERIAL. OVER-EXCAVATION SHALL BE BACKFILLED WITH SUITABLE BEDDING STONE, COMPACTED IN 12-INCH LIFTS, TO THE DESIGN BOTTOM ELEVATION OF THE WET WELL. THE CONTRACTOR SHALL MAKE ALLOWANCE FOR THIS WORK IN THE CONSTRUCTION SCHEDULE.

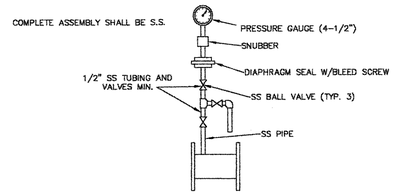


REDUCED PRESSURE PRINCIPLE
PRESSURE GAUGE BLOW OFF
13300004 NTS

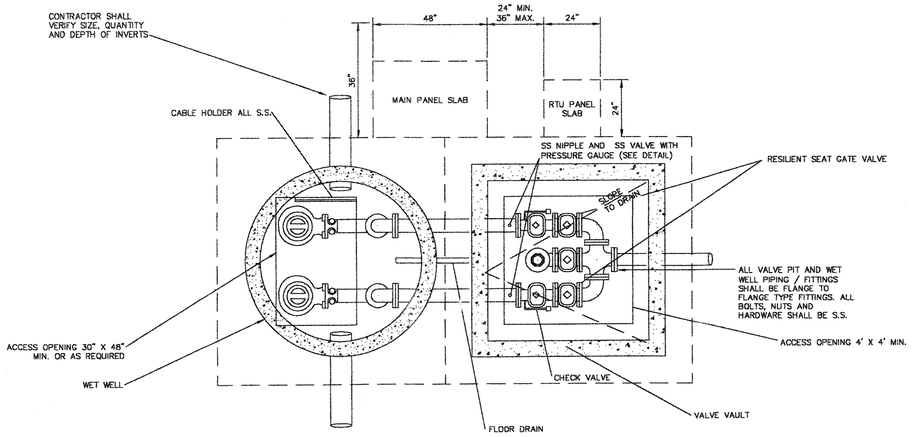


## DESIGN DATA

| | |
|---|---|
| AVERAGE DAILY FLOW | 10.70 GPM |
| DESIGN (PEAK) FLOW | 80.0 GPM |
| STATIC HEAD LOSS | 10.00 FEET |
| FRICTION HEAD LOSS | 7.00 FEET |
| TDH IN EXIST. F.M. | 92.4 FEET |
| TOTAL DYNAMIC HEAD | 110 FEET |

PUMP

| | |
|---|---|
| MAKE | FLYGT |
| MODEL | M-3127 (GRINDER) |
| IMPELLER | 266 |
| MOTOR | 3430 RPM, 1 PHASE, 5.0 HP 230 VOLTS, 60 HZ |
| SOLIDS | GRINDER PUMP |
| OPERATING POINT | 80 GPM @ 110 TDH |

PIPING

| | |
|---|---|
| PUMP DISCHARGE SIZE | = 2" |
| WET WELL PIPING | = 3" |
| FORCE MAIN SIZE | = 3" |

WELL

| | |
|---|---|
| INSIDE DIA. OF WET WELL | 8' |
| TOP ELEVATION | 16.5' |
| BOTTOM ELEVATION | 3.44' |
| INVERT ELEVATION | 7.41' NE , 9.04' W |
| C.Y. OF BALLAST REQ'D. | 4.5 |

ALARMS

| | |
|---|---|
| AUDIBLE ALARM ON EL. | 7.41' |
| LIGHT ON EL. | 6.91' |
| LAG PUMP ON EL. | 6.41' |
| LEAD PUMP ON EL. | 5.41' |
| PUMP OFF EL. (LWL) | 4.41' |

| VALVE VAULT | WET WELL HATCH |
|---|---|
| 96" X 96" | 36"X48" |

VALVE VAULT HATCH
48"X48"

TOP SLAB
AS SHOWN w/EXP JOINTS

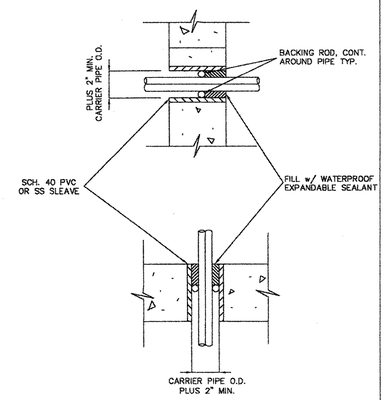


WALL / FLOOR SLEEVE - SMALL DIA.
15050012 NTS

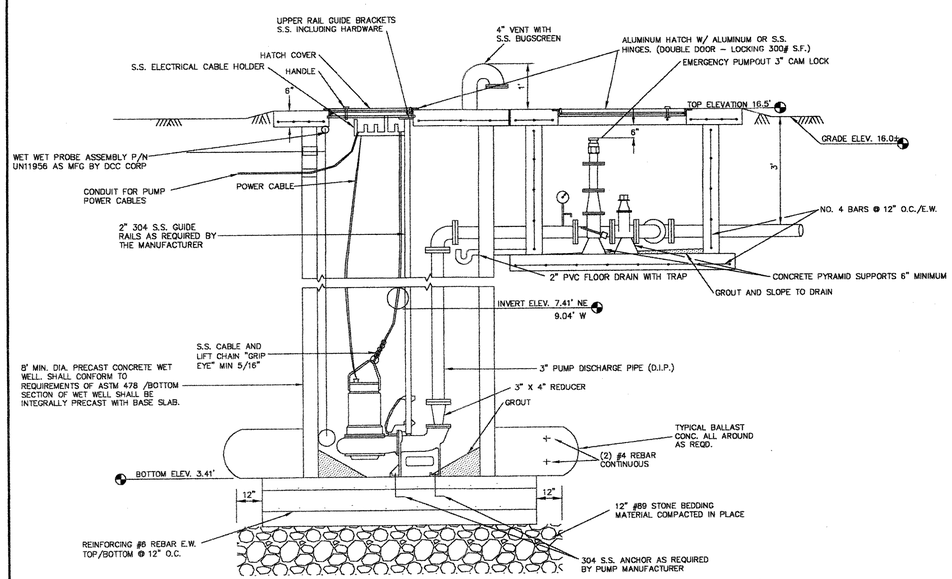


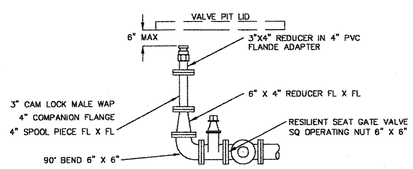


AUX. PUMP OUT DETAIL
NTS

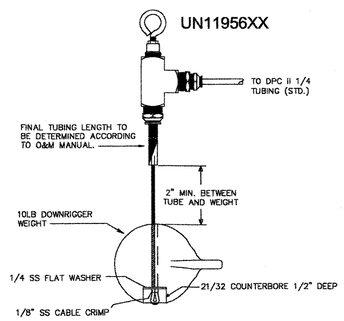


DIGITAL CONTROL CORPORATION
WET WELL PROBE ASSEMBLY
NTS

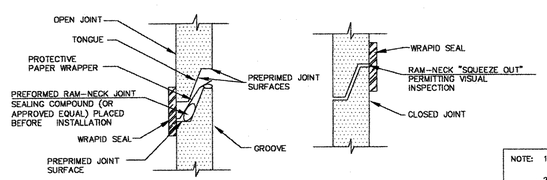


JOINT DETAIL
NTS

NOTE: EXTERIOR BITUMASTIC WRAP SHALL BE INSTALLED AT ALL WET WELL SEGMENT JOINTS.

NOTE:
1. WRAPID SEAL MUST BE USED ON ALL JOINTS, CASTINGS AND RISER RINGS: ON ALL JOINTS ON AIR RELEASES, MANHOLES, GREASE/WATER, OIL/WATER SEPARATORS, AND WETWELLS.
2. WRAPID SEAL MUST BE USED IN ACCORDANCE WITH MANUFACTURES RECOMMENDATIONS.
3. THE CITY SHALL HAVE THE OPTION OF SPECIFYING THE TYPE OF INTERIOR LINING TO BE INSTALLED FOR EACH INDIVIDUAL MANHOLE.
4. THE CITY SHALL HAVE THE OPTION OF REQUIRING A NEGATIVE PRESSURE TEST PER ASTM C-1244
5. LIFT HOLES MUST NOT PENETRATE THE WALLS

LIFT STATION DETAILS

PRELIMINARY & CONSTRUCTION PLAN SIMULTANEOUS SUBMITTAL

| | |
|---|---|
| PUMP STATION DETAILS (1) SHEET 26 OF 28 | MAGNOLIA OAKS 7240 MASSACHUSETTS AVE. NEW PORT RICHEY, FL 34653 |
| | SUBMITTAL DATE: |
| REV / DATE / DESCRIPTION | SCALE: N.T.S. |

GALEN JAY HOFMANN , P. E.
8820 AIRWAY BLVD.
NEW PORT RICHEY, FL 34654
P: 727-844-7686
F: 727-844-7626

GALEN J. HOFMANN P.E.
CONSULTING CIVIL ENGINEER
GALEN J. HOFMANN , P.E. # 21796
NOT VALID UNLESS EMBOSSED WITH A RAISED SEAL

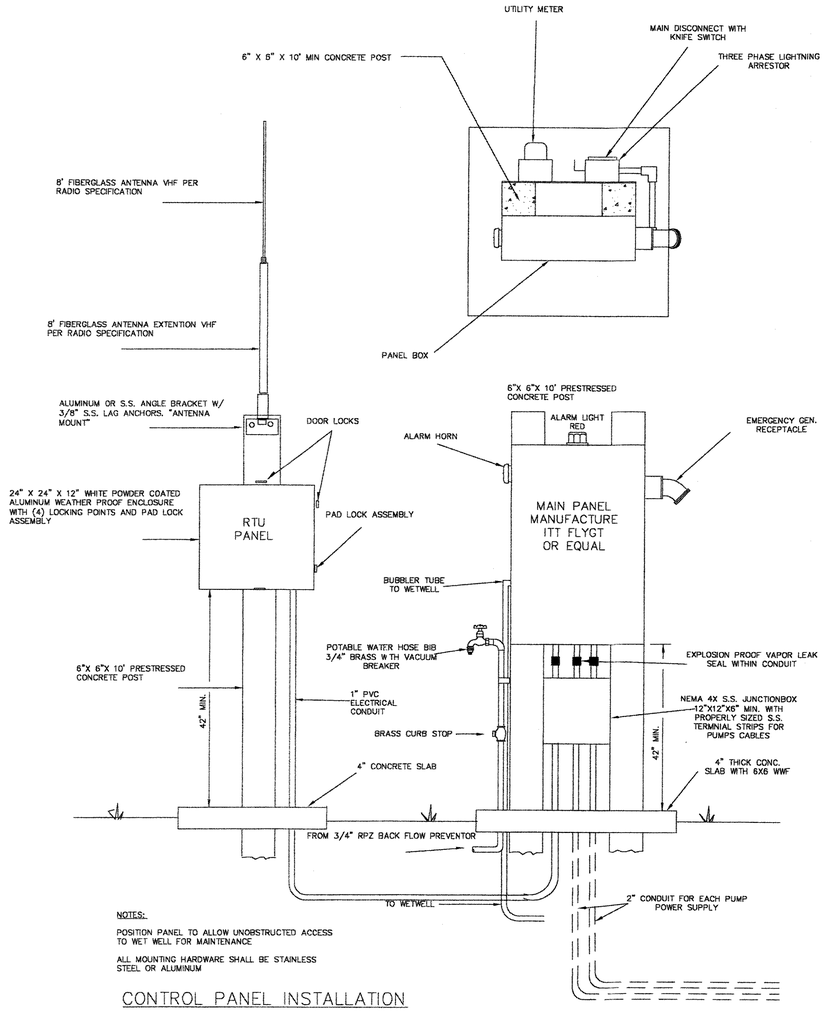


NOTES:

POSITION PANEL TO ALLOW UNORSTRUCTED ACCESS TO WET WELL FOR MAINTENANCE

ALL MOUNTING HARDWARE SHALL BE STAINLESS STEEL OR ALUMINUM

CONTROL PANEL INSTALLATION

NOTE: ALL CONTROL WIRE TO BE #14 AWG MIN. AS MFG BY SPECTRO WIRE & CABLE, INC. PN- UL1015/12,30-14/26 RED OR EQUAL.

LEGEND

| | |
|---|---|
| AB – ALARM BELL | GR – GENERATOR RECEPTACLE |
| AC – AIR COMPRESSOR | HOA – HAND-OFF-AUTO SELECTOR SWITCH |
| AL – ALARM LIGHT | MB – MOTOR BREAKER |
| ASB – ALARM SILENCE BUTTON | MCB – MAIN CIRCUIT BREAKER |
| ATS – ALTERNATOR TEST SWITCH | MS – MOTOR STARTER |
| CCB – CONTROL CIRCUIT BREAKER | OL – OVERLOAD |
| DPDT – DOUBLE POLE DOUBLE THROW | PB – POWER BLOCK |
| DRB – DUPLEX RECEPTACLE BREAKER | PL – PILOT LIGHT |
| ETM – ELAPSED TIME METER | PM – PHASE MONITOR |
| F – FUSE | R – RELAY |
| FB – FUSE BLOCK | RL – RUNNING LIGHT |
| FL – FLASHER | SPM – SINGLE PHASE MODULE |
| FR – FLOAT REGULATOR | TB – TERMINAL BLOCK |
| FS – FLOW SWITCH | TTS – THERMAL TERMINAL STRIP |
| GFDR – GROUND FAULT DUPLEX RECEPTACLE | XDUCER – TRANSDUCER |
| GND – GROUND | XFMR – TRANSFORMER |

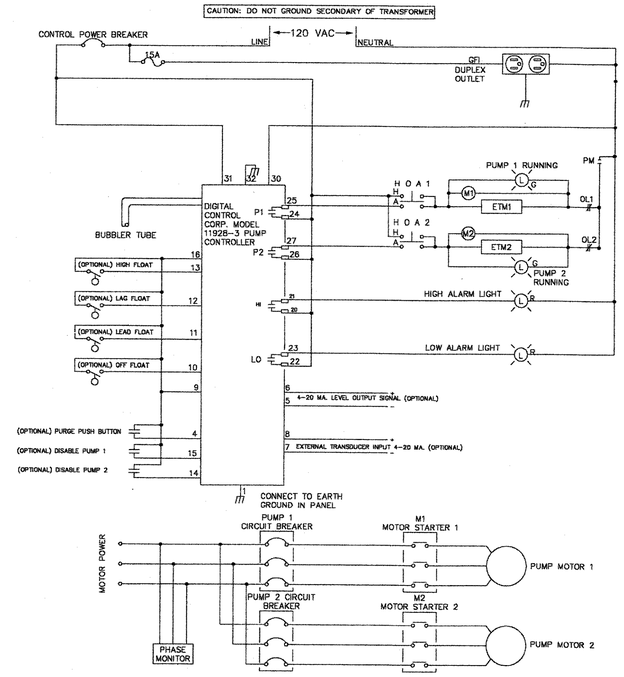


DUPLEX LIFT STATION CONTROL PANEL

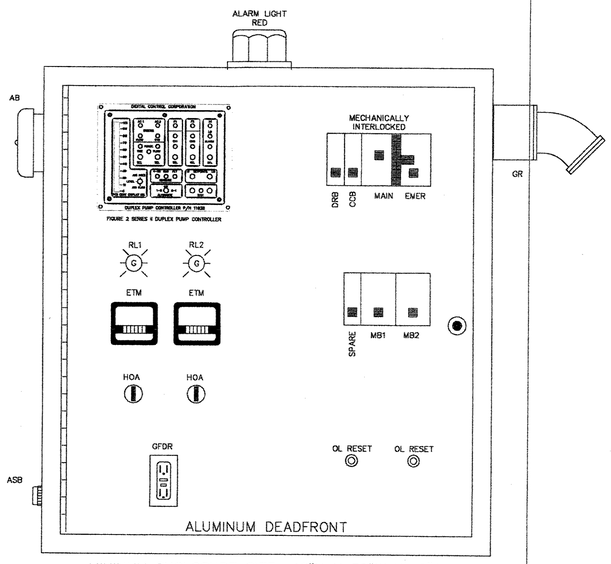


MINIMUM ENCLOSURE SIZE: 48"H X 36"W X 12"D

DOOR REMOVED TO SHOW DEADFRONT LAYOUT NEMA TYPE 4X 304 S.S. ENCLOSURE WITH CONTINUOUS HINGE ALL HARDWARE STAINLESS STEEL

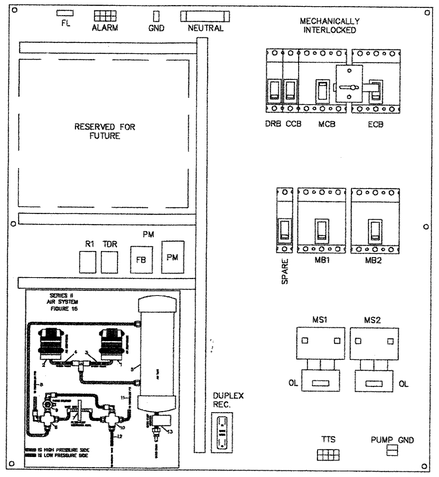


SUB-PANEL LAYOUT
NTS

LIFT STATION CONTROL PANEL DETAILS

PRELIMINARY & CONSTRUCTION PLAN SIMULTANEOUS SUBMITTAL

| | |
|---|---|
| PUMP STATION DETAILS (2)<br>SHEET 27 OF 28 | MAGNOLIA OAKS<br>7240 MASSACHUSETTS AVE.<br>NEW PORT RICHEY, FL 34653 |
| | SUBMITTAL DATE: |
| REV DATE DESCRIPTION | SCALE: N.T.S. |

GALEN JAY HOFMANN , P. E.
8620 AIRWAY BLVD.
NEW PORT RICHEY, FL 34654
P: 727-844-7686
F: 727-844-7926

GALEN J. HOFMANN P.E.
CONSULTING CIVIL ENGINEER
GALEN JAY HOFMANN , P.E. # 31798
NOT VALID UNLESS EMBOSSED WITH A RAISED SEAL

NOTES:

1. RTU PANEL SHALL BE 24"X24"X12" ALUMINUM WHITE POWDER COATED, PANEL SHALL BE WEATHER PROOF WITH (4) LOCKING POINTS. (1) OF THESE POINTS MUST ACCEPT STANDARD MASTER LOCK FOR PANEL SECURITY. PANEL SHALL HAVE A ALUMINUM BACKPLATE FOR MOUNTING EQUIPMENT AND COMPONENTS. PANEL SHALL BE PROPERLY GROUNDED.

2. ALL COMPONETS OF TELEMETRY SYSTEM SHALL BE AS SPECIFIED.

3. ALL CONTROL WIRE SHALL BE MIN. #14 AWG AS MFG BY SPECTRO WIRE AND CABLE, INC. P/N UL1015/1230-14/26 OR APPROVED EQUAL.

4. ALL PANLE, ANTENNA AND EQUIPMENT MOUNTING HARDWARE/BRACKETS SHALL BE S.S. OR ALUMINUM.

5. FOR DETAILED INFORMATION ON CURRENT SCADA / TELEMETRY SYSTEM OR PRODUCT APPLICATIONS, SPECIFICATIONS, ORDERING AND SUPPORT CONTACT DIGITAL CONTROL CORP. 1-800-335-5219 OR 727-547-1622. 10871 75TH ST. NORTH, LARGO, FL. 33777

6. CONTRACTOR SHALL SUPPLY ALL HARDWARE I.E. COMPONENTS, CABLES, CONNECTORS REQUIRED FOR A COMPLETE AND FULLY FUCTIONAL RTU/SCADA UNIT. ALL METHODS OF WIRING, COMPONENT LOCATIONS, AND OPERATION SHALL BE APPROVED BY CITY PERSONEL PRIOR TO FINAL STARTUP AND ACCEPTANCE OF SYSTEM.

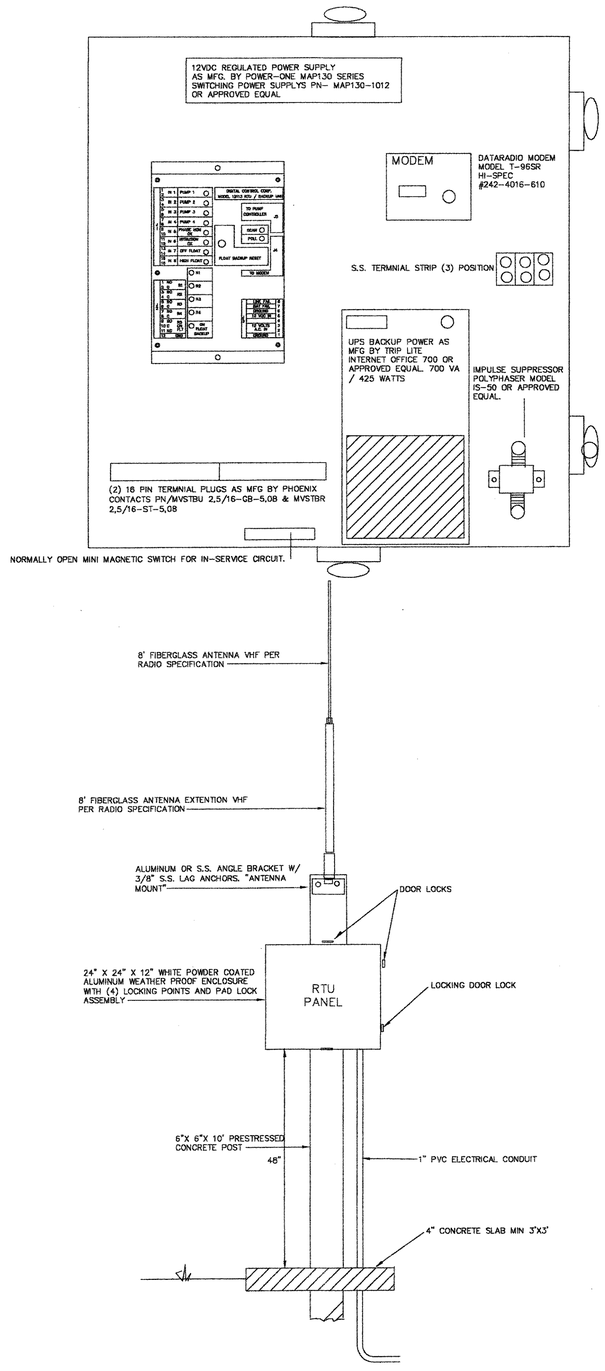


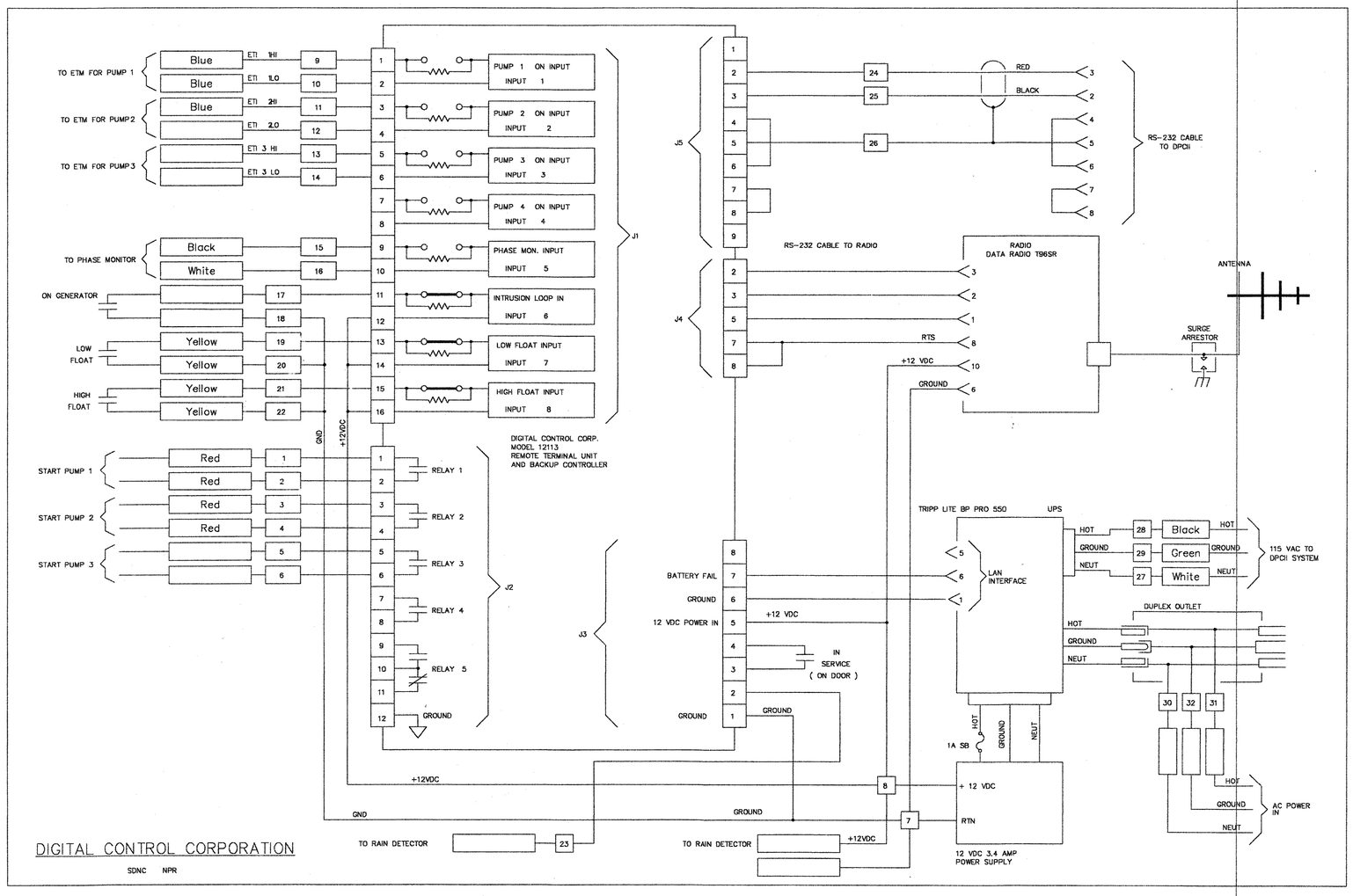


DIGITAL CONTROL CORPORATION

SDNC NPR

TYPICAL RTU / SCADA CONTROL PANEL

PRELIMINARY & CONSTRUCTION PLAN SIMULTANEOUS SUBMITTAL

| | |
|---|---|
| PUMP STATION DETAILS (3)<br>SHEET 28 OF 28 | MAGNOLIA OAKS<br>7240 MASSACHUSETTS AVE.<br>NEW PORT RICHEY, FL 34653 |
| | SUBMITTAL DATE: |
| REV DATE DESCRIPTION | SCALE: N.T.S. |


GALEN JAY HOFMANN , P. E.
8620 AIRWAY BLVD.
NEW PORT RICHEY, FL 34654
P: 727-844-7626
F: 727-844-7626

GALEN J. HOFMANN P.E.
CONSULTING CIVIL ENGINEER
GALEN J. HOFMANN, P.E. # 21796
NOT VALID UNLESS EMBOSSED WITH A RAISED SEAL

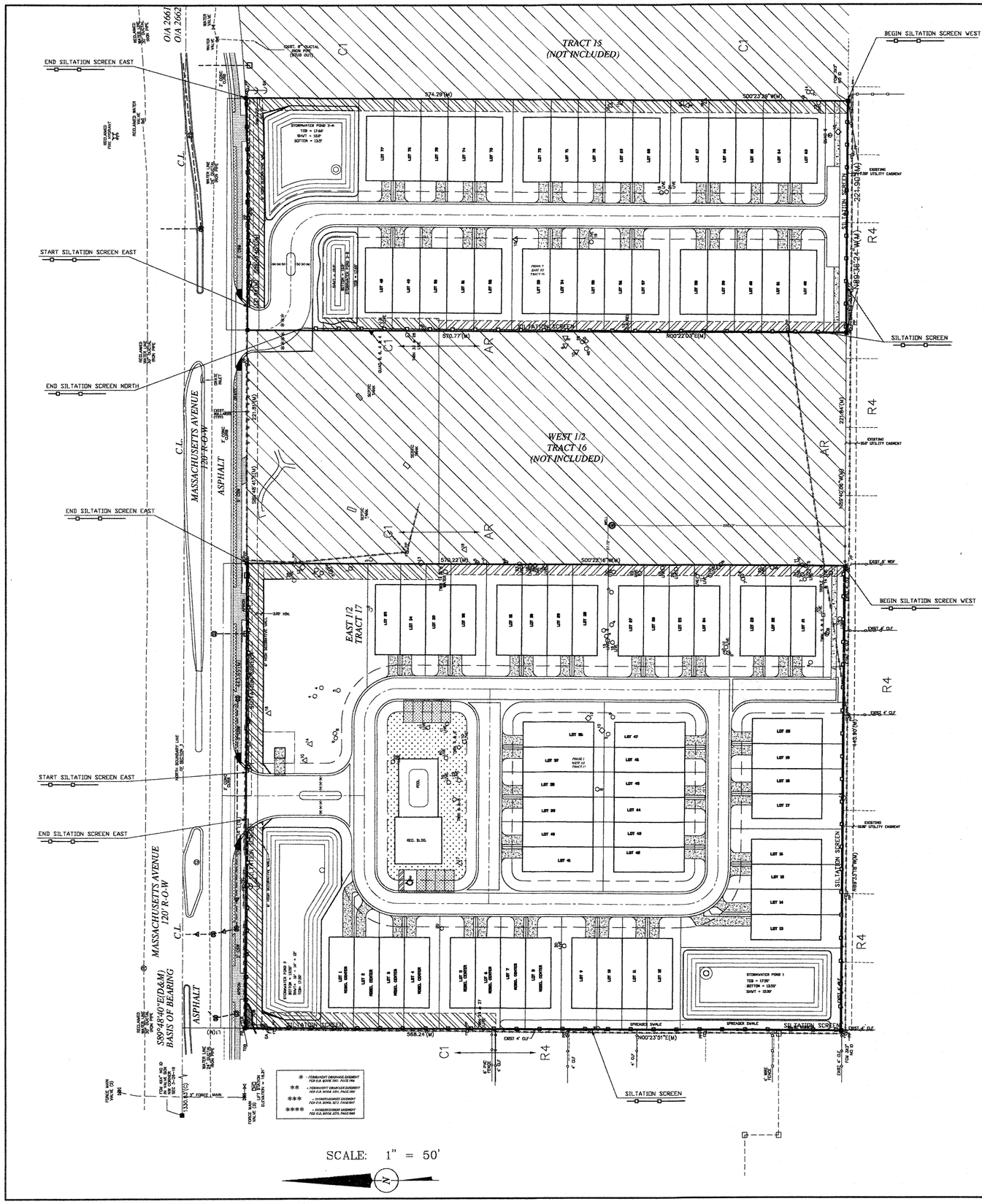


LEGEND:

A/C = AIR CONDITIONER, BFP = BACK FLOW PREVENTOR, BSL = BUILDING SETBACK LINE, (C) = CALCULATED, C# = CURVE NUMBER (SEE CURVE TABLE), CB = CABLE BOX, CLP = CONCRETE LIGHT POLE, C/S = CONCRETE SLAB, CLF = CHAIN LINK FENCE, CI = CURB INLET, CONC = CONCRETE, CSW = CONCRETE SIDEWALK, (D) = DEED, DE = DRAINAGE EASEMENT, DMH = DRAINAGE MANHOLE, EB = ELECTRIC BOX, EOL = EDGE OF LIMEROCK, EOW = EDGE OF WATER, E/P = EDGE OF PAVEMENT, (F) = FIELD, F/C = FENCE CORNER, FCC = FOUND CROSS CUT, FCM = FOUND CONCRETE MONUMENT, FFE = FINISHED FLOOR ELEVATION, FIP = FOUND IRON PIPE, FIR = FOUND IRON ROD, FN = FOUND NAIL, FND = FOUND NAIL AND DISK, FPC = FLORIDA POWER CORPORATION, GA = GUY ANCHOR, GI = GRATE INLET, ID = IDENTIFICATION, IE = INGRESS & EGRESS EASEMENT, INV = INVERT, LB = LICENSED BUSINESS, LP = LIGHT POLE, (M) = MEASURED, MH = MANHOLE, MP = METER POLE, OHW = OVERHEAD WIRE, O/A = OVER ALL, (P) = PLAT, PC = POINT OF CURVATURE, PCP = PERMANENT CONTROL POINT, PI = POINT OF INTERSECTION, PP = POWER POLE, POB = POINT OF BEGINNING, POC = POINT OF COMMENCEMENT, PRC = POINT OF REVERSE CURVE, PRM = PERMANENT REFERENCE MONUMENT, PT = POINT OF TANGENT, PSM = PROFESSIONAL SURVEYOR AND MAPPER, R/W = RIGHT OF WAY, SIR = SET 5/8" IRON ROD LB 7079, SND = SET NAIL AND DISK LB 7079, TNF = TRANSFORMER, TOB = TOP OF BANK, TP = TELEPHONE PEDESTAL, UE = UTILITY EASEMENT, WB = WATER BOX, WDF = WOOD FENCE, VA = VALVE, WV = WATER VALVE

SITE LOCATION

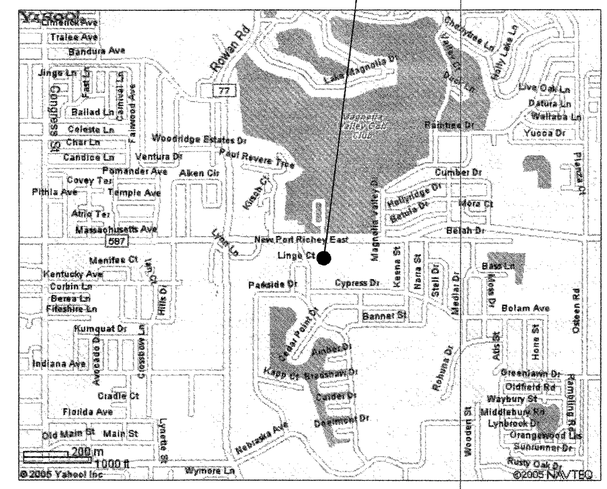


SIGNATORY REQUIREMENTS

1. ALL NOTICES OF INTENT, NOTICES OF TERMINATION , STORM WATER POLLUTION PREVENTION PLANS, REPORTS, CERTIFICATIONS OR INFORMATION EITHER SUBMITTED TO THE DEPARTMENT OR THE OPERATOR OF A MUNICIPAL SEPARATE STORM SEWER SYSTEM, OR THAT THIS PERMIT REQUIRES BE MAINTAINED BY THE PERMITTEE, SHALL BE SIGNED AS SET FORTH IN RULE 62-620.305, F.A.C.
2. INSPECTION REPORT PREPARED PURSUANT TO PART V.D.4.C. OF THIS PERMIT SHALL BE SIGNED BY THE QUALIFIED INSPECTOR THAT PREPARED THEM AS WELL AS BY A RESPONSIBLE AUTHORITY FOR THE OPERATOR AS SPECIFIED IN PARK VII.C.1. ABOVE
3. ANY PERSON SIGNING DOCUMENTS UNDER THIS PERMIT, EXCEPT CONTRACTOR CERTIFICATIONS UNDER PART V.D.6., SHALL MAKE THE FOLLOWING CERTIFICATION:

"I CERTIFY UNDER PENALTY OF LAW THAT THIS DOCUMENT AND ALL ATTACHMENTS WERE PREPARED UNDER MY DIRECTION OR SUPERVISION IN ACCORDANCE WITH A SYSTEM DESIGNED TO ASSURE THAT QUALIFIED PERSONNEL PROPERLY GATHERED AND EVALUATED THE INFORMATION SUBMITTED. BASED ON MY INQUIRY OF THE PERSON OR PERSONS WHO MANAGED THE SYSTEM, OR THOSE PERSONS DIRECTLY RESPONSIBLE FOR GATHERING THE INFORMATION, THE INFORMATION SUBMITTED IS , TO THE BEST OF MY KNOWLEDGE AND BELIEF, TRUE, ACCURATE, AND COMPLETE. I AM AWARE THAT THERE ARE SIGNIFICANT PENALTIES FOR SUBMITTING FALSE INFORMATION, INCLUDING THE POSSIBILITY OF FINE AND IMPRISONMENT FOR KNOWING VIOLATIONS.

CONSTRUCTION OF SURFACE WATER MANAGEMENT PLAN:

1. ALTHOUGH NO TEMPORARY FILL AREAS ARE ANTICIPATED, ANY TEMPORARY FILL AREAS SHALL BE SURROUNDED BY PROPERLY INSTALLED SILTAION SCREENS.
2. ALTHOUGH NO DEWATERING ACTIVITIES ARE ANTICIPATED, ALL DEWATERING SHALL BE DIRECTED TO A TEMPORARY POND AREA, ADEQUATELY SIZED TO CONTAIN THE DEWATERING FLOW WITH

   POND SHALL BE SURROUNDED BY PROPERLY INSTALLED SILTATION SCREEN, WITH DOUBLE SILTATION SCREEN LOCATED AT THE TEMPORARY DEWATERING POND DISCHARGE AREA.
3. ALL SILTATION SCREEN SHOWN ON THIS PLAN AND ANY OTHER SILTATION SCREEN AS MAY BE REQUIRED TO SATISFY No. 1 & 2 ABOVE, SHALL REMAIN IN PLACE AND BE PROPERLY MAINTAINED UNTIL PROJECT COMPLETION.
4. ALL REQUIREMENTS OF THE S.W.F.W.M.D. B.O.R. 2.8, SECTION 40D-4.301, AND 40D-4.302 SHALL BE REVIEWED BY THE CONTRACTOR PRIOR TO START OF CONSTRUCTION. THE CONTRACTOR SHALL BE RESPONSIBLE FOR FOLLOWING ALL REQUIREMENTS LISTED IN THESE REGULATIONS.

SIGNATURE BLOCK INDICATES THE OWNER IS AWARE OF AND MUST ASSUME MAINTENANCE OF THE EROSION PROTECTION THAT IS ASSOCIATED WITH THE PROJECT DURING CONSTRUCTION

OWNER: CHARLES P. CASSON - CASSWELL, INC.

SIGNATURE DATE

ENGINEER: GALEN J. HOFMANN, P.E.

SIGNATURE DATE

CONSTRUCTION OF SURFACE WATER MANAGEMENT PLAN
SHEET 1 OF 2

MAGNOLIA OAKS
7240 MASSACHUSETTS AVE.
NEW PORT RICHEY, FL 34653

SUBMITTAL DATE:

| REV | DATE | DESCRIPTION |
|---|---|---|
| 00 | 5/08/06 | INITIAL SUBMITTAL |

SCALE: 1" = 50.00'

(PHASE 1)
03-26-16-0070-01700-0010
03-26-16-0070-01700-0020
03-26-16-0070-01700-0030

(PHASE 2)
03-26-16-0070-01600-0010

GALEN JAY HOFMANN , P. E.
8629 AIRWAY BLVD.
NEW PORT RICHEY, FL 34654
P: 727-844-7686
F: 727-844-7626

GALEN J. HOFMANN P.E.
CONSULTING CIVIL ENGINEER
5-1-08
GALEN J. HOFMANN , P.E. # 21796
NOT VALID UNLESS EMBOSSED WITH A RAISED SEAL

State of Florida
Department of Environmental Protection
Generic Permit
For
Stormwater Discharge from Large and Small Construction Activities
May 2003

This permit is issued under the provisions of Section 403.0885, Florida Statutes, and applicable rules of the Florida Administrative Code pursuant to the Department's federally-approved National Pollutant Discharge Elimination System (NPDES) stormwater regulatory program. Stormwater discharge associated with large construction activity, as defined at 40 CFR Part 122.26(b)(14)(x) and herein, is regulated pursuant to Section 402(p)(2) of the federal Clean Water Act (CWA). Stormwater discharge associated with small construction activity, as defined at 40 CFR 122.26(b)(15) and herein, is regulated pursuant to Section 402(p)(6) of the CWA. This permit constitutes authorization to discharge stormwater associated with large and small construction activities to surface waters of the State, including through a Municipal Separate Storm Sewer System (MS4). Until this permit is terminated, modified, or revoked, permittees that have properly obtained coverage under this permit are authorized to discharge to surface waters of the State, including through an MS4, in accordance with the terms and conditions of this permit.

DEP Document No. 62-621.300(4)(a) Effective May 1, 2003 1

**Part I. General Provisions**

A. Applicability and Coverage

1. Federal law prohibits the point source discharge of pollutants, including the discharge of stormwater associated with large or small construction activities pursuant to 40 CFR Part 122 and as defined in Part II of this permit, to waters of the United States without a National Pollutant Discharge Elimination System (NPDES) permit. Under the State of Florida's authority to administer the NPDES stormwater program at 403.0885, F.S., operators that have stormwater discharge associated with large or small construction activities to surface waters of the State, including through a Municipal Separate Storm Sewer System (MS4), must obtain coverage either under a generic permit issued pursuant to Chapter 62-621, F.A.C., or an individual permit issued pursuant to Chapter 62-620, F.A.C.

2. Coverage under this generic permit is available for stormwater discharges from large and small construction activities to surface waters of the State as defined in Section 403.031, F.S., including stormwater discharges associated with construction activity to surface waters of the State through an MS4.

3. This generic permit does not constitute authorization under Part IV of Chapter 373, F.S., for the construction, alteration, operation, maintenance, abandonment, or removal of any stormwater management system, dam, impoundment, reservoir, or appurtenant work or works, including dredging or filling, in, on or over wetlands and other surface waters, as determined by the methodology authorized in Subsection 373.421(1), F.S.

4. This generic permit authorizes the discharge of stormwater associated with construction activity under the State's federally-approved NPDES stormwater program only and does not supersede the requirement to obtain a stormwater discharge permit under Chapter 62-25, F.A.C.; environmental resource permit (ERP) under Part IV, Chapter 373, F.S.; stormwater discharge permit from a Department-approved delegated local government; or any other required federal, state, or local government permit.

B. Eligibility

1. This permit authorizes the discharge of stormwater associated with large and small construction activity, as defined in Part II of this permit, occurring after the effective date of this permit.

2. This permit authorizes stormwater discharge associated with construction activity that is mixed with stormwater discharges associated with industrial activity other than construction, where:

a. the industrial source other than construction is located on the same site as the construction activity;

b. stormwater discharges associated with industrial activity from the areas of the site where construction activities are occurring are in compliance with the terms of this permit; and

c. stormwater discharges associated with industrial activity from the areas of the site where industrial activity other than construction are occurring are in compliance with the terms of a different generic permit (e.g., Multi-Sector Generic Permit for Stormwater Discharge Associated with Industrial Activity) or individual permit authorizing such discharges.

DEP Document No. 62-621.300(4)(a) Effective May 1, 2003 2

3. Limitations on Coverage. The following stormwater discharges from construction sites are not authorized by this permit:

a. stormwater discharges that originate from the site after construction activities have been completed and the site has undergone final stabilization;

b. discharges that are mixed with sources of non-stormwater, other than discharges identified in Part IV.A.3. of this permit;

c. stormwater discharge associated with construction activity that is covered under an existing generic or individual permit. Such discharges may be authorized under this permit after the existing individual permit or generic permit term of coverage expires, provided the existing permit did not establish numeric limitations for such discharges; or

d. stormwater discharge associated with construction activity that the Department has determined to be or may reasonably be expected to be causing or contributing to a violation of a surface water quality standard.

C. Obtaining Authorization

1. In order for stormwater discharge associated with construction activity to be authorized under this generic permit, an operator must:

a. Meet the eligibility requirements in Part I.B. of this permit;

b. Develop and implement a stormwater pollution prevention plan (SWPPP) in accordance with the requirements of Part V of this permit; and

c. Submit a completed Notice of Intent (NOI) in accordance with the requirements of Part III of this permit, including submittal of the appropriate processing fee as established in Rule 62-4.050(4)(d), F.A.C.

2. The Department may deny coverage under this permit or require submittal of a revised NOI based on the Department's determination that the NOI is incomplete, the permit fee has not been paid, or the submittal otherwise is not in accordance with the requirements of this generic permit.

Part II. Definitions

For the purposes of this generic permit, the following definitions shall apply, unless otherwise indicated:

1. "Best Management Practices" or "BMPs" means schedules of activities, prohibitions of practices, maintenance procedures, and other management practices to prevent or reduce the pollution of surface waters. BMPs also include treatment requirements, operating procedures, and practices to control site runoff, spillage or leaks, sludge or waste disposal, or drainage from raw material storage.

2. "Construction Activity" means the act or process of developing or improving land which involves the disturbance of soils and includes clearing, grading, and excavation.

3. "Commencement of Construction" means the initial disturbance of soils associated with clearing, grading, or excavating activities or other construction activities.

4. "Department" or "DEP" means the Florida Department of Environmental Protection.

5. "Final Stabilization" means that all soil disturbing activities at the site have been completed, and that a uniform (e.g., evenly distributed, without large bare areas) perennial

DEP Document No. 62-621.300(4)(a) Effective May 1, 2003 3

vegetative cover with a density of at least 70% for all unpaved areas and areas not covered by permanent structures has been established or equivalent permanent stabilization measures (e.g., geotextiles) have been employed.

6. "Large Construction Activity" means construction activity that results in the disturbance of five (5) or more acres of total land area. Large construction activity also includes the disturbance of less than five acres of total land area that is part of a larger common plan of development or sale if the larger common plan will ultimately disturb five acres or more.

7. "Municipal Separate Storm Sewer System" or "MS4" means a large, medium, or small MS4 as defined in Chapter 62-624, F.A.C.

8. "NOI" means notice of intent to be covered by this permit (see Part III of this permit.)

9. "NOT" means notice of termination (see Part VIII of this permit).

10. "NPDES" means the Department's federally-approved National Pollutant Discharge Elimination System program.

11. "Operator" means the person, firm, contractor, public organization, or other legal entity that owns or operates the construction activity and that has authority to control those activities at the project necessary to ensure compliance with the terms and conditions of this permit.

12. "Qualified Inspector" means a person that:

a. has successfully completed and met all requirements necessary to be fully certified through the DEP Stormwater, Erosion, and Sedimentation Control Inspector Training Program;

b. has successfully completed an equivalent formal training program; or

c. that is qualified by other training or practical experience in the field of stormwater pollution prevention and erosion and sedimentation control.

13. "Small Construction Activity" means construction activity that results in the disturbance of equal to or greater than one (1) acre and less than five (5) acres of total land area. Small construction activity also includes the disturbance of less than one acre of total land area that is part of a larger common plan of development or sale that will ultimately disturb equal to or greater than one acre and less than five acres.

14. "Stormwater" means the flow of water which results from, and which occurs immediately following, a rainfall event.

15. "Stormwater discharge associated with construction activity" means the discharge of stormwater from large or small construction activities, including areas where soil disturbing activities; construction materials handling or storage; or, equipment storage or maintenance are located.

16. "Surface Waters of the State" means those surface waters that are defined in section 403.031, F. S.

17. "Water Management District" or "WMD" means the Northwest Florida Water Management District, the Suwannee River Water Management District, the St. Johns River Water Management District, the Southwest Florida Water Management District, or the South Florida Water Management District.

Part III. Notice of Intent Requirements

A. Deadlines for Notification.

DEP Document No. 62-621.300(4)(a) Effective May 1, 2003 4

1. Operators seeking coverage under this generic permit to authorize stormwater discharge associated with construction activity for new large or small construction activities, for which commencement of construction begins after the effective date of this permit, shall file an NOI for coverage under this permit at least two (2) days before commencement of construction.

2. Operators of small construction activity, where commencement of construction occurred prior to the effective date of this permit, seeking coverage under this permit to authorize stormwater discharge associated with construction activity after the effective date of this permit shall file an NOI for coverage within 31 days of the effective date of this permit.

3. Permittees that previously obtained coverage under the State of Florida Generic Permit for Construction Activities That Disturb Five or More Acres of Land, issued and effective October 22, 2000, for large construction activity shall remain covered under that generic permit until permit coverage is terminated, revoked, or the permittee's five year term of coverage expires. Permittees covered under the October 2000 generic permit indicated above that will have stormwater discharge associated with construction activity beyond their initial five year term of coverage under the October 2000 generic permit shall submit an NOI for coverage under this generic permit at least two (2) days before expiration of coverage under the October 2000 generic permit.

4. For construction activities where the operator changes, the new operator shall file an NOI for coverage under this permit at least two (2) days before assuming control of the project and the previous operator shall file an NOT to terminate permit coverage in accordance with Part VIII of this permit.

B. Contents of Notice of Intent.

1. In order to obtain coverage under this permit, an operator of the stormwater discharge associated with construction activity shall submit a completed Notice of Intent to Use Generic Permit for Stormwater Discharge from Large and Small Construction Activities, DEP Form 62-621.300(4)(b), effective May 1, 2003, including the applicable permit processing fee as specified in Rule 62-4.050(4)(d), F.A.C. By completing, signing, and submitting an NOI, the operator is certifying that they meet all eligibility requirements of this permit and are informing the Department of their intent to be covered by, and comply with, the terms and conditions of this generic permit. The Notice of Intent shall be signed in accordance with Part VII.C. of this permit by the operator.

C. Where to Submit.

1. NOIs are to be submitted to the following address:

NPDES Stormwater Notices Center, MS# 2510
Florida Department of Environmental Protection
2600 Blair Stone Road
Tallahassee, Florida 32399-2400

DEP Document No. 62-621.300(4)(a) Effective May 1, 2003 5

2. A copy of the NOI or letter from DEP confirming coverage under this generic permit shall be posted at the construction site in a prominent place for public viewing (such as alongside a building permit).

D. Additional Notification.

1. Projects that discharge stormwater associated with construction activity to a municipal separate stormwater system (MS4) shall submit a copy of the NOI to the operator of the MS4.

E. Period of Coverage

1. Coverage under this generic permit is effective two (2) days after the date of submittal of a complete NOI to the Department.

2. Coverage under this generic permit is limited to a term not to exceed five years from the effective date of coverage.

F. Permit Coverage Renewal

1. If the project will continue to have stormwater discharge associated with construction activity beyond the initial five year term of coverage, the operator shall submit a new NOI at least two (2) days before expiration of the current term of coverage under this permit.

**Part IV. Special Conditions, Management Practices, and Other Non-numeric Limitations**

A. Prohibition on Non-stormwater Discharges.

1. Except as provided in paragraphs I.B.2. and IV.A.3., all discharges covered by this permit shall be composed entirely of stormwater associated with construction activity.

2. Except as specified in IV.A.3. below, discharges of material other than stormwater associated with construction activity must be in compliance with a Department permit (other than this permit) issued for the discharge, or be exempt therefrom.

3. The following non-stormwater discharges may be authorized by this permit provided the non-stormwater component of the discharge is in compliance with paragraph V.D.5.: discharges from fire fighting activities; fire hydrant flushings; waters used to spray off loose solids from vehicles (wastewaters from a more thorough cleaning, including the use of detergents or other cleaners is not authorized by this part) or control dust in accordance with Part V.D.2.a.(2); potable water sources including waterline flushings; irrigation drainage; routine external building washdown which does not use detergents; pavement washwaters where spills or leaks of toxic or hazardous materials have not occurred (unless all spilled material has been removed) and where detergents are not used; air conditioning condensate; springs; and foundation or footing drains where flows are not contaminated with process materials such as solvents.

4. Discharges resulting from ground water dewatering activities at construction sites are not covered by this permit. Applicants for those discharges must obtain coverage under the Department's Generic Permit for the Discharge of Produced Ground Water from any Non-contaminated Site Activity under Rule 62-621.300(2), F.A.C.

DEP Document No. 62-621.300(4)(a) Effective May 1, 2003 6

B. Releases in Excess of Reportable Quantities.

1. The discharge of hazardous substances or oil in the stormwater discharge(s) from a facility or activity shall be prevented or minimized in accordance with the applicable stormwater pollution prevention plan for the facility or activity. This permit does not relieve the operator of the reporting requirements of 40 CFR part 117 and 40 CFR part 302. Where a release containing a hazardous substance in an amount equal to or in excess of a reporting quantity established under either 40 CFR 117 or 40 CFR 302, occurs during a 24 hour period:

a. The operator is required to notify the State Warning Point (800-320-0519 or 850-413-9911) as soon as he or she has knowledge of the discharge;

b. The operator shall submit within 14 calendar days of knowledge of the release a written description of the release (including the type and estimate of the amount of material released), the date that such release occurred, the circumstances leading to the release, and remedial steps to be taken, to the Florida Department of Environmental Protection, NPDES Stormwater Section, Mail Station 2500, 2600 Blair Stone Road, Tallahassee, Florida 32399-2400; and

c. The stormwater pollution prevention plan required under Part V of this permit must be modified within 14 calendar days of knowledge of the release to: provide a description of the release, the circumstances leading to the release, and the date of the release. In addition, the plan must be reviewed to identify measures to prevent the reoccurrence of such releases and to respond to such releases, and the plan must be modified where appropriate.

2. This permit does not authorize the discharge of hazardous substances or oil resulting from an on-site spill.

**Part V. Stormwater Pollution Prevention Plan**

A. A stormwater pollution prevention plan shall be developed and implemented for each construction site covered by this permit. Stormwater pollution prevention plans shall be prepared in accordance with good engineering practices. Equivalent erosion and sediment control plans prepared as a permit requirement under Part IV, Chapter 373, F.S., or Chapter 62-25, F.A.C., may serve as the pollution prevention plan provided all of the elements of this section are included in such an alternative plan. The plan shall identify potential sources of pollution that may reasonably be expected to affect the quality of stormwater discharge associated with construction activity. In addition, the plan shall describe and ensure the implementation of best management practices which will be used to reduce the pollutants in stormwater discharge associated with construction activity and to assure compliance with the terms and conditions of this permit. Facilities must implement the provisions of the stormwater pollution prevention plan required under this part as a condition of this permit. Failure to develop and implement a stormwater pollution prevention plan in accordance with the requirements of this part shall be deemed a violation of this permit and may result in enforcement action.

B. Deadlines for Plan Preparation and Compliance.

1. The pollution prevention plan shall:

DEP Document No. 62-621.300(4)(a) Effective May 1, 2003 7

a. Be completed (including certification by the operator in accordance with Part VII.C.) prior to the submittal of an NOI to be covered under this permit and updated as appropriate;

b. The plan shall provide for compliance with the terms and schedule of the plan beginning with the initiation of construction activities.

C. Keeping Plans Current.

1. The permittee shall amend the plan whenever there is a change in design, construction, operation, or maintenance, which has a significant effect on the potential for the discharge of pollutants to surface waters of the State or an MS4, including the addition of or change in location of stormwater discharge points, and which has not otherwise been addressed in the plan. The permittee also shall amend the plan if it proves to be ineffective in eliminating or significantly minimizing pollutants from sources identified under Part V.D.1. of this permit, or in otherwise achieving the general objectives of controlling pollutants in stormwater discharge associated with construction activity. In addition, the plan shall be amended to identify any new contractor and/or subcontractor that will implement a measure of the stormwater pollution prevention plan (see Part V.D.6.). Amendments to the plan shall be prepared, signed, dated, and kept as attachments to the original plan.

D. Contents of Plan.

1. Site Description. Each plan shall provide a description of pollutant sources and other information as indicated:

a. A description of the nature of the construction activity;

b. A description of the intended sequence of major activities which disturb soils for major portions of the site (e.g. grubbing, excavation, grading);

c. Estimates of the total area of the site and the total area of the site that is expected to be disturbed by excavation, grading, or other construction activities;

d. Existing data describing the soil or the quality of any discharge from the site and an estimate of the size of the drainage area for each discharge point;

e. A site map indicating drainage patterns and approximate slopes anticipated after major grading activities, areas of soil disturbance, an outline of areas which may not be disturbed, the location of major structural and nonstructural controls identified in the plan, the location of areas where stabilization practices are expected to occur, surface waters, wetlands, and locations where stormwater is discharged to a surface water or MS4; and,

f. The latitude and longitude of each discharge point and the name of the receiving water(s) for each discharge point.

2. Controls. Each plan shall include a description of appropriate controls, BMPs, and measures that will be implemented at the construction site. The plan shall clearly describe for each major activity identified in Part V.D.1.b. appropriate control measures and the timing during the construction process that the measures will be implemented. For example, perimeter controls for one portion of the site will be installed after the clearing and grubbing necessary for installation of the measure, but before the clearing and grubbing for the remaining portions of the site. Perimeter controls shall be actively maintained until final stabilization of those portions of the site upward of the perimeter control. Temporary perimeter controls shall be removed after final stabilization. All controls shall be consistent with the performance standards for erosion and sediment control and

DEP Document No. 62-621.300(4)(a) Effective May 1, 2003 8

stormwater treatment as set forth in Rule 62-40.432, F.A.C., the applicable stormwater or environmental resource permitting requirements of the DEP or appropriate WMD, and the guidelines contained in the Florida Development Manual: A Guide to Sound Land and Water Management (DEP, 1988) and any subsequent amendments.

a. Erosion and Sediment Controls.

(1) Stabilization Practices. Each plan shall provide a description of interim and permanent stabilization practices, including site-specific scheduling of the implementation of the practices. Site plans should ensure that existing vegetation is preserved where attainable and that disturbed portions of the site are stabilized. Stabilization practices may include: temporary seeding, permanent seeding, mulching, geotextiles, sod stabilization, vegetative buffer strips, protection of trees, preservation of mature vegetation, and other appropriate measures. A record of the dates when major grading activities occur, when construction activities temporarily or permanently cease on a portion of the site and when stabilization measures are initiated shall be included in the plan. Stabilization measures shall be initiated as soon as practicable, but in no case more than 7 days, in portions of the site where construction activities have temporarily or permanently ceased.

(2) Structural Practices. Each plan shall include a description of structural practices, to divert flows from exposed soils, store flows, retain sediment on-site, or otherwise limit runoff and the discharge of pollutants from exposed areas of the site. Such practices may include silt fences, earth dikes, diversions, swales, sediment traps, check dams, subsurface drains, pipe slope drains, level spreaders, storm drain inlet protection, rock outlet protection, reinforced soil retaining systems, gabions, coagulating agents and temporary or permanent sediment basins. Structural BMPs shall be placed on upland soils unless a State of Florida wetland resource management permit or environmental resource permit issued pursuant to Chapter 373, F.S., and applicable regulations of the DEP or WMD authorize otherwise.

(3) Sediment Basins.

(a) For drainage basins with 10 or more disturbed acres at one time, a temporary (or permanent) sediment basin providing 3,600 cubic feet of storage per acre drained, or equivalent control measures, shall be provided where attainable until final stabilization of the site. The 3,600 cubic feet of storage area per acre drained does not apply to flows from offsite areas and flows from onsite areas that are either undisturbed or have undergone final stabilization where such flows are diverted around both the disturbed area and the sediment basin. For drainage basins with 10 or more disturbed acres at one time and where a temporary sediment basin providing 3,600 cubic feet of storage per acre drained, or equivalent controls is not attainable, a combination of smaller sediment basins and/or sediment traps and other BMPs should be used. At a minimum, silt fences, or equivalent sediment controls are required for all sideslope and downslope boundaries of the construction area.

(b) For drainage basins of less than 10 acres, sediment basins and/or sediment traps are recommended but not required. At a minimum, silt fences or equivalent sediment controls are required for all sideslope and downslope boundaries of the construction area.

(c) Areas that will be used for permanent stormwater infiltration treatment (e.g., stormwater retention ponds) should not be used for temporary sediment basins unless appropriate measures are taken to assure removal of accumulated fine sediments, which may cause premature clogging and loss of infiltration capacity, and to avoid excessive compaction of soils by construction machinery or equipment.

b. Permanent Stormwater Management Controls.

DEP Document No. 62-621.300(4)(a) Effective May 1, 2003 9

Each plan shall include a description of stormwater management controls or BMPs (e.g., stormwater detention or retention systems, vegetated swales, velocity dissipation devices at discharge points) that will be installed during the construction process to control pollutants in stormwater discharges that will occur during construction and after construction operations have been completed. This generic permit only addresses the installation of stormwater management controls and not the ultimate operation and maintenance of such controls after the construction activities have been completed and the site has undergone final stabilization. Under this generic permit, permittees are only responsible for the installation and maintenance of stormwater management BMPs prior to final stabilization of the site, and are not responsible for maintenance after stormwater discharges associated with construction activity have been eliminated from the site. However, all stormwater management systems and BMPs shall be operated and maintained in perpetuity after final stabilization in accordance with requirements set forth in the State of Florida stormwater or environmental resource permit issued under Chapter 62-25, F.A.C., or Part IV, Chapter 373, F.S.

c. Controls for Other Potential Pollutants.

(1) Waste Disposal. The plan shall assure that waste, such as discarded building materials, chemicals, litter, and sanitary waste are properly controlled in accordance with all applicable state, local, and federal regulations. This permit does not authorize the discharge of solid materials, including building materials, to surface waters of the State or an MS4.

(2) The plan shall assure that off-site vehicle tracking of sediments and the generation of dust is minimized.

(3) The plan shall be consistent with applicable State and local waste disposal, sanitary sewer or septic system regulations.

(4) The plan shall address the proper application rates and methods for the use of fertilizers, herbicides and pesticides at the construction site and set forth how those procedures will be implemented and enforced. Nutrients shall be applied only at rates necessary to establish and maintain vegetation.

(5) The plan shall ensure that the application, generation, and migration of toxic substances is limited and that toxic materials are properly stored and disposed.

3. Maintenance. The plan shall include a description of procedures that will be followed to ensure the timely maintenance of vegetation, erosion and sediment controls, stormwater management practices, and other protective measures and BMPs so they will remain in good and effective operating condition.

4. Inspections. A qualified inspector (provided by the operator) shall inspect all points of discharge into surface waters of the State or an MS4; disturbed areas of the construction site that have not been finally stabilized; areas used for storage of materials that are exposed to precipitation; structural controls; and, locations where vehicles enter or exit the site, at least once every seven calendar days and within 24 hours of the end of a storm that is 0.50 inches or greater as follows:

a. Disturbed areas and areas used for storage of materials that are exposed to precipitation shall be inspected for evidence of, or the potential for, pollutants entering the stormwater system. The stormwater management system and erosion and sediment control measures identified in the plan shall be observed to ensure that they are operating correctly. Discharge locations or points shall be inspected to ascertain whether erosion and sediment control and stormwater treatment measures are effective in preventing or minimizing the discharge of

DEP Document No. 62-621.300(4)(a) Effective May 1, 2003 10

pollutants, including retaining sediment onsite pursuant to Rule 62-40.432, F.A.C. Locations where vehicles enter or exit the site shall be inspected for evidence of offsite sediment tracking.

b. Based on the results of the inspection, all maintenance operations needed to assure proper operation of all controls, BMPs, practices, or measures identified in the stormwater pollution prevention plan shall be done in a timely manner, but in no case later than 7 calendar days following the inspection. If needed, pollution prevention controls, BMPs, and measures identified in the plan shall be revised as appropriate, but in no case later than 7 calendar days following the inspection. Such modifications shall provide for timely implementation of any changes to the plan within 7 calendar days following the inspection.

c. A report summarizing the scope of the inspection; name(s) and qualifications of personnel making the inspection; the date(s) of the inspection; rainfall data; major observations relating to the implementation of the stormwater pollution prevention plan; and actions taken in accordance with paragraph V.D.4.b. of this permit, shall be made and retained, in accordance with Part VI of this permit, as part of the stormwater pollution prevention plan. Such reports shall identify any incidents of non-compliance. Where a report does not identify any incidents of non-compliance, the report shall contain a certification that the facility is in compliance with the stormwater pollution prevention plan and this permit. The report shall be signed in accordance with Part VII.C of this permit.

5. Non-Stormwater Discharges. Except for flows from fire fighting activities, sources of non-stormwater listed in Part IV.A.3 of this permit that are combined with stormwater discharges associated with construction activity must be identified in the plan. The plan shall identify and ensure the implementation of appropriate pollution prevention and treatment measures for the non-stormwater component(s) of the discharge.

6. Contractor/Subcontractor Certification.

a. The stormwater pollution prevention plan must clearly identify, for each measure identified in the plan, the contractor(s) and/or subcontractor(s) that will implement the measure. All contractors and subcontractors identified in the plan must sign a copy of the certification statement in Part V.D.6.b. of this permit. All certifications must be included in the stormwater pollution prevention plan.

b. Certification Statement for Contractors/Subcontractors. All contractors and subcontractors identified in a stormwater pollution prevention plan in accordance with Part V.D.6.a. of this permit shall sign a copy of the following certification statement before conducting any activities at the site:

"I certify under penalty of law that I understand, and shall comply with, the terms and conditions of the State of Florida Generic Permit for Stormwater Discharge from Large and Small Construction Activities and this Stormwater Pollution Prevention Plan prepared thereunder."

The certification must include the name and title of the person providing the signature in accordance with Part VII.C of this permit; the name, address and telephone number of the contracting firm; and the date the certification is made.

**Part VI. Retention of Records**

DEP Document No. 62-621.300(4)(a) Effective May 1, 2003 11

A. The permittee shall retain copies of stormwater pollution prevention plans and all reports required by this permit, and records of all data used to complete the Notice of Intent to be covered by this permit, for a period of at least three years from the date that the site is finally stabilized.

B. The permittee shall retain a copy of the stormwater pollution prevention plan and all reports, records and documentation required by this permit at the construction site, or an appropriate alternative location as specified in the NOI, from the date of project initiation to the date of final stabilization.

**Part VII. Standard Permit Conditions**

A. Any permit noncompliance constitutes a violation of Section 403.0885, F. S. and is grounds for enforcement action; for permit coverage termination, or revocation; or for denial of permit coverage renewal.

B. All of the general conditions listed in Rule 62-621.250, F.A.C., are adopted herein by reference.

C. Signatory Requirements.

1. All Notices of Intent, Notices of Termination, stormwater pollution prevention plans, reports, certifications or information either submitted to the Department or the operator of a municipal separate storm sewer system, or that this permit requires be maintained by the permittee, shall be signed as set forth in Rule 62-620.305, F.A.C.

2. Inspection reports prepared pursuant to Part V.D.4.c. of this permit shall be signed by the qualified inspector that prepared the report, or shall be signed by a responsible authority for the operator as specified in Part VII.C.1. above.

3. Any person signing documents under this permit, except contractor/subcontractor certifications under Part V.D.6., shall make the following certification:

"I certify under penalty of law that this document and all attachments were prepared under my direction or supervision in accordance with a system designed to assure that qualified personnel properly gathered and evaluated the information submitted. Based on my inquiry of the person or persons who manage the system, or those persons directly responsible for gathering the information, the information submitted is, to the best of my knowledge and belief, true, accurate, and complete. I am aware that there are significant penalties for submitting false information, including the possibility of fine and imprisonment for knowing violations."

**Part VIII. Termination of Coverage**

A. Notice of Termination.

1. Where a site has been finally stabilized (see Part II for the definition of final stabilization) and all stormwater discharges authorized by this permit are eliminated, the permittee shall submit a completed Notice of Termination (DEP Form 62-621.300(6)), signed in accordance

DEP Document No. 62-621.300(4)(a) Effective May 1, 2003 12 DEP Document No. 62-621.300(4)(a) Effective May 1, 2003 13

with Part VII.C. of this permit, within 14 days of final stabilization of the site to terminate coverage under this permit.

2. Elimination of stormwater discharges associated with construction activity means that all disturbed soils at the site have been finally stabilized and temporary erosion and sediment control measures have been removed or will be removed at an appropriate time, or that all stormwater discharges associated with construction activity from the site that are authorized by this generic permit have otherwise been eliminated.

3. For construction activities where the operator changes, the existing operator shall file an NOT in accordance with this Part within 14 days of relinquishing control of the project to a new operator.

B. Where to Submit.

1. A permittee shall submit a Notice of Termination to the following address:

NPDES Stormwater Notices Center, MS# 2510
Florida Department of Environmental Protection
2600 Blair Stone Road
Tallahassee, Florida 32399-2400

2. Projects that discharged storm water associated with construction activity to a municipal separate storm sewer system (MS4) shall submit a copy of the NOT to the operator of the MS4.

NOTE:
EROSION CONTROL OR SEDIMENTATION BARRIER: THE CONTRACTOR IS TO PROVIDE EROSION CONTROL OR SEDIMENTATION BARRIER (HAY BALES OR SILT SCREEN) TO PREVENT SILTATION OF ADJACENT PROPERTY, STREETS, DETENTION PONDS, STORM SEWERS AND WATERWAYS PRIOR TO COMMENCEMENT OF CONSTRUCTION OR DEMOLITION. THE EROSION CONTROL OR SEDIMENTATION BARRIER SHALL BE MAINTAINED AND INSPECTED WEEKLY IN AN EFFECTIVE WORKING MANNER FOR THE DURATION OF CONSTRUCTION. ADDITIONALLY, CONTRACTOR SHALL PLACE STRAW, MULCH OR OTHER SUITABLE MATERIAL ON GROUND IN AREAS WHERE CONSTRUCTION RELATED TRAFFIC IS TO ENTER & EXIT SITE. IF, IN THE OPINION OF THE ENGINEER AND/OR THE LOCAL AUTHORITIES, EXCESSIVE QUANTITIES OF SOIL ARE TRANSPORTED OFF-SITE EITHER BY NATURAL DRAINAGE OR BY VEHICULAR TRAFFIC, THE CONTRACTOR IS TO REMOVE SAID SOIL AND REPAIR DAMAGED OR INEFFECTIVE EROSION CONTROL OR SEDIMENTATION BARRIER TO THE SATISFACTION OF THE ENGINEER AND/OR THE LOCAL AUTHORITIES. SILTATION ACCUMULATIONS GREATER THAN THE LESSER OF 12 INCHES OR ONE-HALF THE DEPTH OF THE SEDIMENTATION BARRIER SHALL BE IMMEDIATELY REMOVED AND REPLACED IN UPLAND AREAS.

CONSTRUCTION OF SURFACE WATER MANAGEMENT PLAN:

1. ALTHOUGH NO TEMPORARY FILL AREAS ARE ANTICIPATED, ANY TEMPORARY FILL AREAS SHALL BE SURROUNDED BY PROPERLY INSTALLED SILTAION SCREENS.
2. ALTHOUGH NO DEWATERING ACTIVITIES ARE ANTICIPATED, ALL DEWATERING SHALL BE DIRECTED TO A TEMPORARY POND AREA, ADEQUATELY SIZED TO CONTAIN THE DEWATERING FLOW WITH POND SHALL BE SURROUNDED BY PROPERLY INSTALLED SILTATION SCREEN, WITH DOUBLE SILTATION SCREEN LOCATED AT THE TEMPORARY DEWATERING POND DISCHARGE AREA.
3. ALL SILTATION SCREEN SHOWN ON THIS PLAN AND ANY OTHER SILTATION SCREEN AS MAY BE REQUIRED TO SATISFY No. 1 & 2 ABOVE, SHALL REMAIN IN PLACE AND BE PROPERLY MAINTAINED UNTIL PROJECT COMPLETION.
4. ALL REQUIREMENTS OF THE S.W.F.W.M.D. B.O.R. 2.8, SECTION 40D-4.301, AND 40D-4.302 SHALL BE REVIEWED BY THE CONTRACTOR PRIOR TO START OF CONSTRUCTION. THE CONTRACTOR SHALL BE RESPONSIBLE FOR FOLLOWING ALL REQUIREMENTS LISTED IN THESE REGULATIONS.

OWNER:
SIGNATURE DATE
ENGINEER: GALEN J. HOFMANN, P.E.
SIGNATURE DATE

SIGNATURE BLOCK INDICATES THE OWNER / AGENT IS AWARE OF AND MUST ASSURE MAINTENANCE OF THE EROSION PROTECTION THAT IS ASSOCIATED WITH THE PROJECT DURING CONSTRUCTION

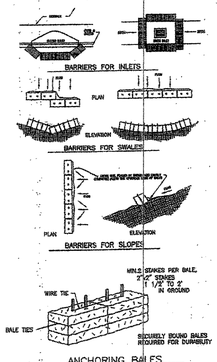


NOTES:
-For additional information and details, see F.D.O.T. Index No.102.
-Unless specified, silt fences may be used in lieu of hay barriers.
-Additional posts and rails may be necessary to secure and support barriers.
-Additional barrier lengths may be required by the County Engineer or by regulatory agencies.

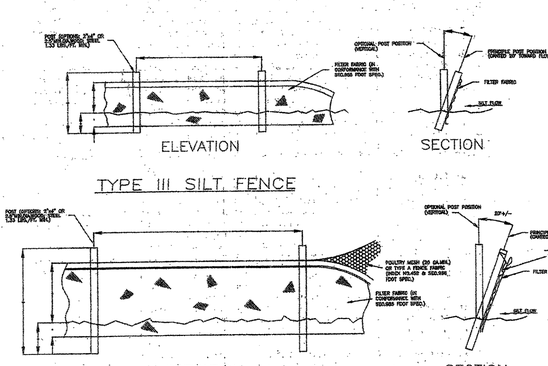


NOTES:
-For additional information and details, see F.D.O.T. Index No.102.
-Unless specified, hay barriers may be used in lieu of silt fences.
-Additional posts and rails may be necessary to secure and support barriers.
-Additional fence lengths may be required by the County Engineer or by regulatory agencies.

DO NOT DEPLOY IN A MANNER THAT SILT FENCES WILL ACT AS A DAM ACROSS PERMANENT FLOWING WATERCOURSES. SILT FENCES ARE TO BE USED AT UPLAND LOCATIONS AND TURBIDITY BARRIERS USED AT PERMANENT BODIES OF WATER.

SILT FENCES

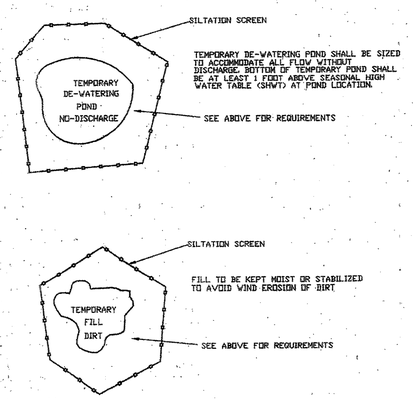


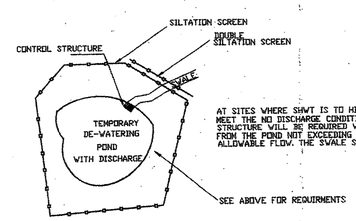


*STORM WATER POLUTION PREVENTION PLAN*

GALEN JAY HOFMANN , P. E.
8620 AIRWAY BLVD.

SP NUMBER: DATE

GALEN J. HOFMANN P.E.
CONSULTING CIVIL ENGINEER